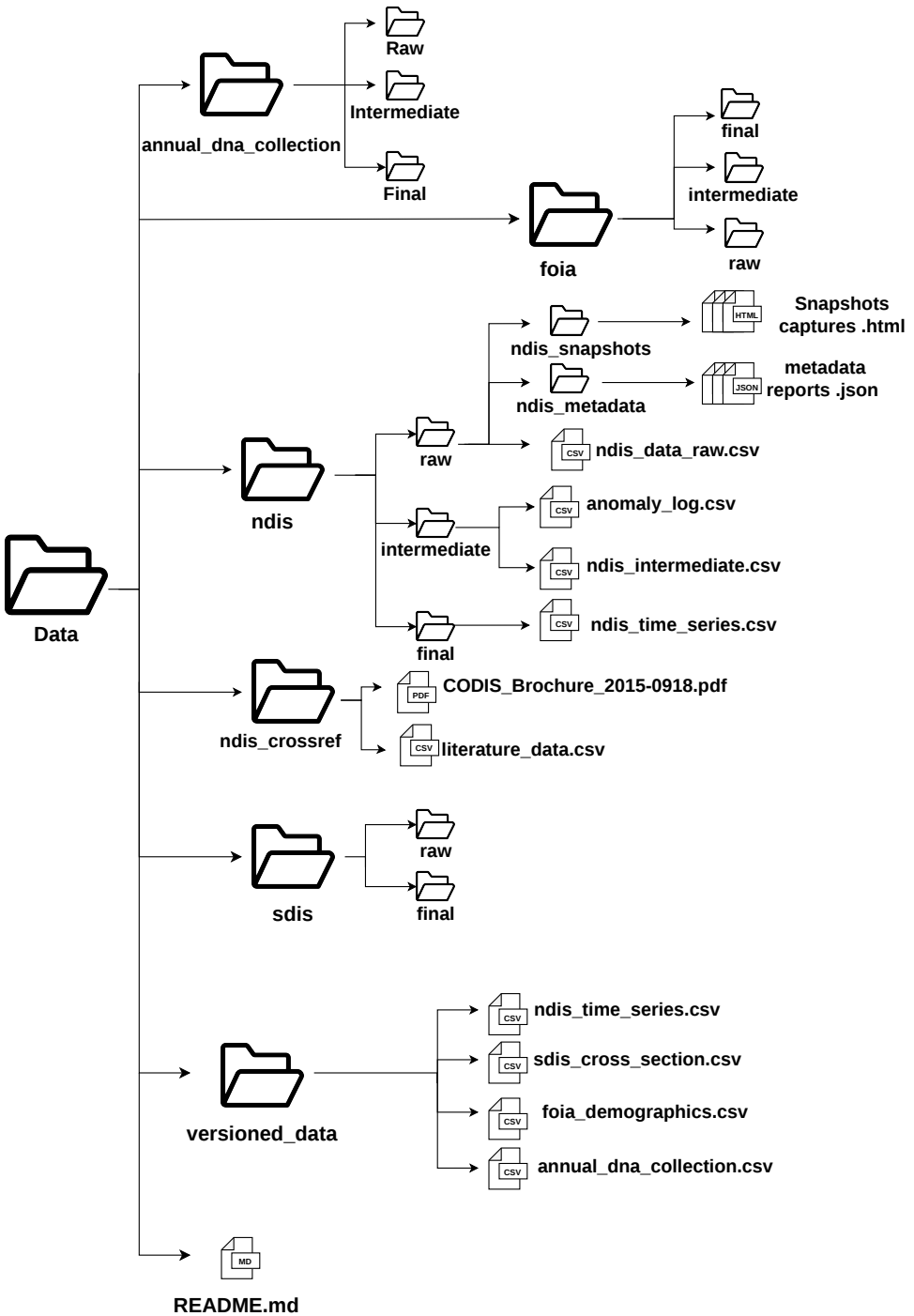
Data
annual_dna_collection
Raw
Intermediate
Final
foia
final
intermediate
raw
ndis
raw
ndis_snapshots
HTML
Snapshots captures .html
ndis_metadata
JSON
metadata reports .json
CSV
ndis_data_raw.csv
intermediate
CSV
anomaly_log.csv
CSV
ndis_intermediate.csv
final
CSV
ndis_time_series.csv
ndis_crossref
PDF
CODIS_Brochure_2015-0918.pdf
CSV
literature_data.csv
sdis
raw
final
versioned_data
CSV
ndis_time_series.csv
CSV
sdis_cross_section.csv
CSV
foia_demographics.csv
CSV
annual_dna_collection.csv
MD
README.md