$\mathcal{H}_2$ Suboptimal Distributed Filter Design for Linear Systems

Junjie Jiao, Harry Trentelman and Kanat Camlibel

Bernoulli Institute for Mathematics, CS and AI

University of Groningen

Benelux Meeting 2020

Contents

1 Introduction
- Standard $\mathcal{H}_2$ Filtering Problem
- Distributed $\mathcal{H}_2$ Filtering Problem
- Literature

2 Problem Formulation

3 Main Result
- Conceptual Algorithm
- Brief Ideas

4 Conclusion

Standard $\mathcal{H}_2$ Filtering Problem

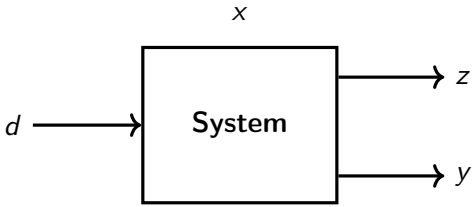

Standard $\mathcal{H}_2$ Filtering Problem

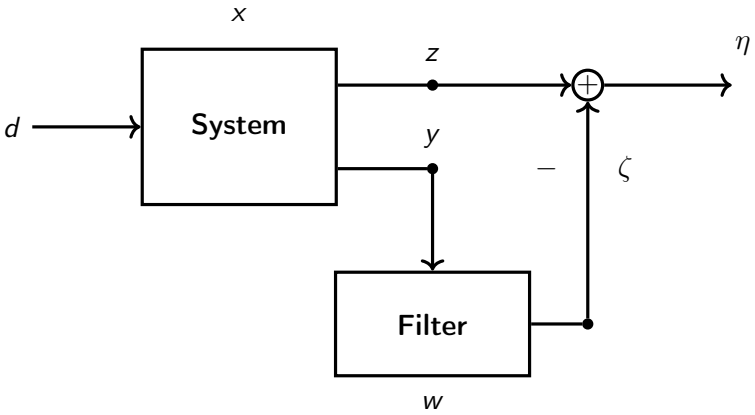

Standard $\mathcal{H}_2$ Filtering Problem

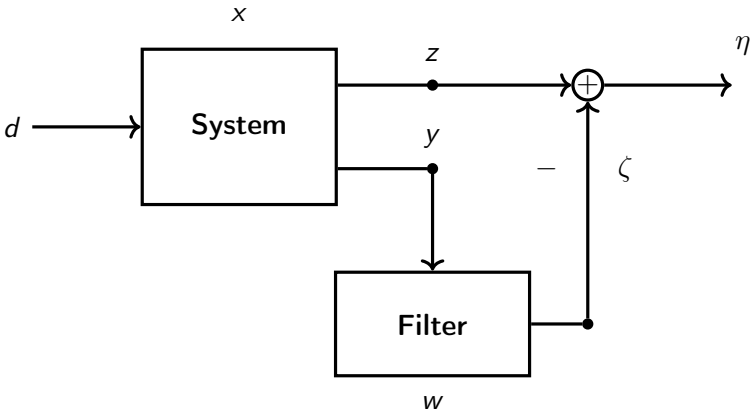

In practice, due to physical constraints on the system, one single filter may not have access to the complete output signal y.

Distributed $\mathcal{H}_2$ Filtering Problem

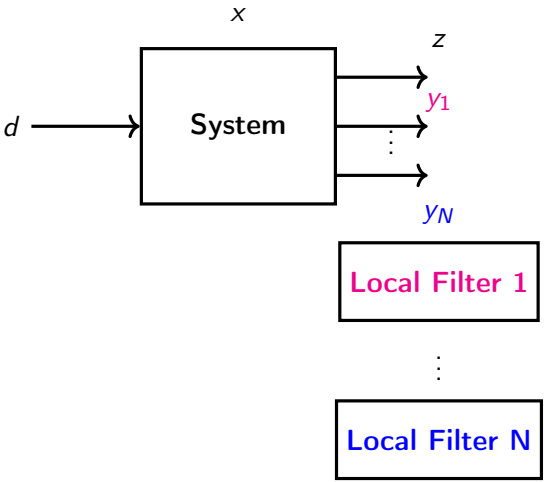

$$y = \begin{pmatrix} y_1 \\ \vdots \\ y_N \end{pmatrix}$$

Distributed $\mathcal{H}_2$ Filtering Problem

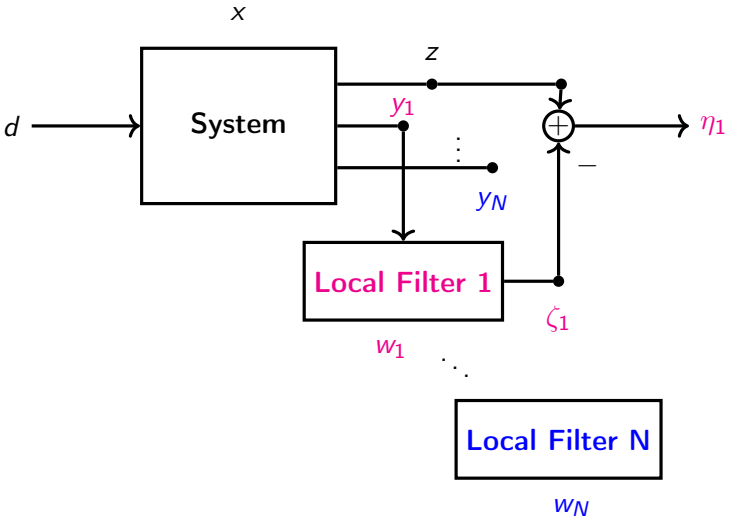

Distributed $\mathcal{H}_2$ Filtering Problem

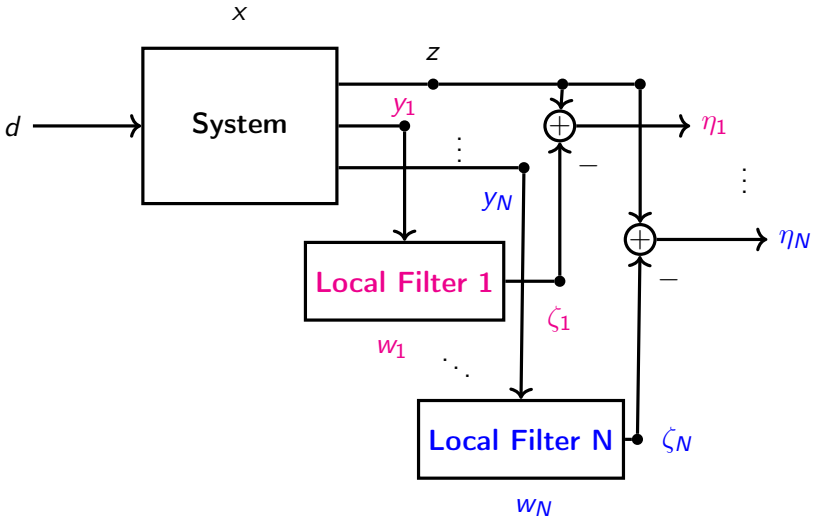

Distributed $\mathcal{H}_2$ Filtering Problem

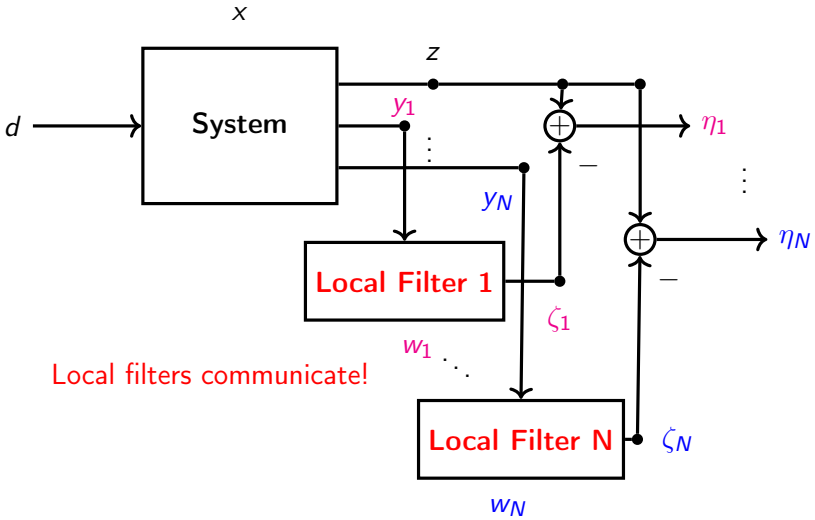

Literature

1. Distributed observer:

2. Distributed filter:

Literature

1. Distributed observer:
   - S. Park and N. C. Martins, "Design of distributed LTI observers for state omniscience," IEEE TAC, 2017.
   - L. Wang and A. S. Morse, "A distributed observer for a time-invariant linear system," IEEE TAC, 2018.
   - A. Mitra and S. Sundaram, "Distributed observers for LTI systems," IEEE TAC, 2018.
   - T. Kim, C. Lee, and H. Shim, "Completely decentralized design of distributed observer for linear systems," to appear in IEEE TAC, 2020.
2. Distributed filter:
   - R. Olfati-Saber, "Distributed Kalman filter with embedded consensus filters," CDC 2005.
   - J. Kim, H. Shim, and J. Wu, "On distributed optimal Kalman-Bucy filtering by averaging dynamics of heterogeneous agents," CDC 2016.
   - V. Ugrinovskii, "Distributed robust filtering with H_∞ consensus of estimates," Automatica, 2011.

Contents

1 Introduction
- Standard $\mathcal{H}_2$ Filtering Problem
- Distributed $\mathcal{H}_2$ Filtering Problem
- Literature

2 Problem Formulation

3 Main Result
- Conceptual Algorithm
- Brief Ideas

4 Conclusion

Problem Formulation

Linear Systems

System:

$$\dot{x} = Ax + Ed,$$
$$y = Cx + Dd,$$
$$z = Hx$$

Problem Formulation

Linear Systems

System:

$$\begin{aligned} \dot{x} &= Ax + Ed, \\ y &= Cx + Dd, \\ z &= Hx \end{aligned}$$

Outputs:

$$y = \begin{pmatrix} y_1 \\ \vdots \\ y_N \end{pmatrix}, \qquad y_i = C_i x + D_i d$$

Problem Formulation

Distributed Filter

System:

$$\begin{aligned} \dot{x} &= Ax + Ed, \\ y_i &= C_i x + D_i d, \quad i = 1, 2, \ldots, N, \\ z &= Hx \end{aligned}$$

Distributed filter:

$$\begin{aligned} \dot{w}_i &= Aw_i + G_i(y_i - C_i w_i) + F_i \sum_{j=1}^{N} a_{ij}(w_j - w_i), \\ \zeta_i &= Hw_i, \quad i = 1, 2, \ldots, N \end{aligned}$$

Problem Formulation

Distributed Filter

System:

$$\begin{aligned} \dot{x} &= Ax + Ed, \\ y_i &= C_i x + D_i d, \quad i = 1, 2, \ldots, N, \\ z &= Hx \end{aligned}$$

Distributed filter:

$$\begin{aligned} \dot{w}_i &= Aw_i + G_i(y_i - C_i w_i) + F_i \sum_{j=1}^{N} a_{ij}(w_j - w_i), \\ \zeta_i &= Hw_i, \quad i = 1, 2, \ldots, N \end{aligned}$$

Assumptions:

- (C, A) is detectable, (C_i, A) are not detectable.

Problem Formulation

Distributed Filter

System:

$$\begin{aligned} \dot{x} &= Ax + Ed, \\ y_i &= C_i x + D_i d, \quad i = 1, 2, \ldots, N, \\ z &= Hx \end{aligned}$$

Distributed filter:

$$\begin{aligned} \dot{w}_i &= Aw_i + G_i(y_i - C_i w_i) + F_i \sum_{j=1}^{N} a_{ij}(w_j - w_i), \\ \zeta_i &= Hw_i, \quad i = 1, 2, \ldots, N \end{aligned}$$

Assumptions:

- (C, A) is detectable, (C_i, A) are not detectable.
- Strongly connected directed graph.

Problem Formulation

Local Error Systems

Local errors:

$$e_i := x - w_i,$$
$$\eta_i := z - \zeta_i$$

Problem Formulation

Local Error Systems

Local errors:

$$e_i := x - w_i,$$
$$\eta_i := z - \zeta_i$$

Local error systems:

$$\dot{e}_i = (A - G_i C_i)e_i + F_i \sum_{j=1}^{N} a_{ij}(e_j - e_i) + (E - G_i D_i)d,$$
$$\eta_i = He_i, \quad i = 1, 2, \ldots, N$$

Problem Formulation

Denote

$$e = (e_1^\top, e_2^\top, \ldots, e_N^\top)^\top,$$
$$\eta = (\eta_1^\top, \eta_2^\top, \ldots, \eta_N^\top)^\top$$

and

$$\bar{A}_G := \text{blockdiag}(A - G_i C_i),$$
$$\bar{F} := \text{blockdiag}(F_i),$$
$$\bar{E}_G := \text{column}(E - G_i D_i), \quad i = 1, 2, \ldots, N$$

Problem Formulation

$\mathcal{H}_2$ Optimal Distributed Filtering Problem

Global error system:

$$\dot{e} = \left(\bar{A}_G - \bar{F}(L \otimes I_n)\right) e + \bar{E}_G d,$$
$$\eta = (I_N \otimes H) e$$

Problem Formulation

$\mathcal{H}_2$ Optimal Distributed Filtering Problem

Global error system:

$$\dot{e} = \left(\bar{A}_G - \bar{F}(L \otimes I_n)\right) e + \bar{E}_G d,$$
$$\eta = (I_N \otimes H) e$$

Impulse response matrix:

$$T(t) = (I_N \otimes H) e^{(\bar{A}_G - \bar{F}(L \otimes I_n))t} \bar{E}_G$$

Problem Formulation

$\mathcal{H}_2$ Optimal Distributed Filtering Problem

Global error system:

$$\dot{e} = \left(\bar{A}_G - \bar{F}(L \otimes I_n)\right) e + \bar{E}_G d,$$
$$\eta = (I_N \otimes H) e$$

Impulse response matrix:

$$T(t) = (I_N \otimes H) e^{(\bar{A}_G - \bar{F}(L \otimes I_n))t} \bar{E}_G$$

Cost functional:

$$J = \int_0^\infty \operatorname{tr}\left[T^\top(t) T(t)\right] dt$$

Problem Formulation

$\mathcal{H}_2$ Optimal Distributed Filtering Problem

Global error system:

$$\dot{e} = \left(\bar{A}_G - \bar{F}(L \otimes I_n)\right) e + \bar{E}_G d,$$
$$\eta = (I_N \otimes H) e$$

Impulse response matrix:

$$T(t) = (I_N \otimes H) e^{(\bar{A}_G - \bar{F}(L \otimes I_n))t} \bar{E}_G$$

Cost functional:

$$J = \int_0^\infty \operatorname{tr}\left[T^\top(t) T(t)\right] dt$$

$\mathcal{H}_2$ Optimal Distributed Filtering Problem

For $i = 1, 2, \ldots, N$, find gain matrices F_i and G_i such that $\lim_{t\to\infty}(x(t) - w_i(t)) \to 0$ and the cost J is minimized.

Problem Formulation

Constraints

Global error system:

$$\dot{e} = \left(\bar{A}_G - \bar{F}(L \otimes I_n)\right) e + \bar{E}_G d,$$
$$\eta = (I_N \otimes H) e$$

Impulse response matrix:

$$T(t) = (I_N \otimes H) e^{(\bar{A}_G - \bar{F}(L \otimes I_n))t} \bar{E}_G$$

Cost functional:

$$J = \int_0^\infty \operatorname{tr}\left[T^\top(t) T(t)\right] dt$$

Problem Formulation

Constraints

Global error system:

$$\dot{e} = \left(\bar{A}_G - \bar{F}(L \otimes I_n)\right) e + \bar{E}_G d,$$
$$\eta = (I_N \otimes H) e$$

Impulse response matrix:

$$T(t) = (I_N \otimes H) e^{(\bar{A}_G - \bar{F}(L \otimes I_n))t} \bar{E}_G$$

Cost functional:

$$J = \int_0^\infty \operatorname{tr}\left[T^\top(t) T(t)\right] dt$$

Instead of solving the $\mathcal{H}_2$ *optimal* distributed filtering problem,

Problem Formulation

Constraints

Global error system:

$$\dot{e} = \left(\bar{A}_G - \bar{F}(L \otimes I_n)\right) e + \bar{E}_G d,$$
$$\eta = (I_N \otimes H) e$$

Impulse response matrix:

$$T(t) = (I_N \otimes H) e^{(\bar{A}_G - \bar{F}(L \otimes I_n))t} \bar{E}_G$$

Cost functional:

$$J = \int_0^\infty \operatorname{tr}\left[T^\top(t) T(t)\right] dt$$

Instead of solving the $\mathcal{H}_2$ *optimal* distributed filtering problem,
we will solve a version of this problem that requires *suboptimality*.

Problem Formulation

Suboptimality Version

Definition 1

Let $\gamma > 0$. The distributed filter is said to be $\mathcal{H}_2$ γ-suboptimal if:

1. for $i = 1, 2, \ldots, N$, whenever $d = 0$, we have $\lim_{t\to\infty}(x(t) - w_i(t)) \to 0$ for all initial conditions on the linear system and the distributed filter.
2. $J < \gamma$.

Problem Formulation

Suboptimality Version

System:

$$\dot{x} = Ax + Ed,$$
$$y_i = C_i x + D_i d,$$
$$z = Hx$$

Cost functional:

$$J = \int_0^\infty \operatorname{tr}\left[T^\top(t)T(t)\right] dt$$

Distributed filter:

$$\dot{w}_i = Aw_i + G_i(y_i - C_i w_i) + F_i \sum_{j=1}^{N} a_{ij}(w_j - w_i),$$
$$\zeta_i = Hw_i, \quad i = 1, 2, \ldots, N$$

Problem Formulation

Suboptimality Version

System:

$$\dot{x} = Ax + Ed,$$
$$y_i = C_i x + D_i d,$$
$$z = Hx$$

Cost functional:

$$J = \int_0^\infty \operatorname{tr}\left[T^\top(t)T(t)\right] dt$$

Distributed filter:

$$\dot{w}_i = Aw_i + G_i(y_i - C_i w_i) + F_i \sum_{j=1}^{N} a_{ij}(w_j - w_i),$$
$$\zeta_i = Hw_i, \quad i = 1, 2, \ldots, N$$

$\mathcal{H}_2$ Suboptimal Distributed Filtering Problem

Let $\gamma > 0$. For $i = 1, 2, \ldots, N$, find gain matrices F_i and G_i such that the distributed filter is $\mathcal{H}_2$ γ-suboptimal.

Contents

1 Introduction
- Standard $\mathcal{H}_2$ Filtering Problem
- Distributed $\mathcal{H}_2$ Filtering Problem
- Literature

2 Problem Formulation

3 Main Result
- Conceptual Algorithm
- Brief Ideas

4 Conclusion

Conceptual Algorithm

Let $\gamma > 0$. Then a distributed filter is obtained as follows:

1. compute T_i such that (C_i, A) are transformed into

$$T_i^\top A T_i = \begin{pmatrix} A_{i11} & 0 \\ A_{i21} & A_{i22} \end{pmatrix}, \; C_i T_i = \begin{pmatrix} C_{i1} & 0 \end{pmatrix}, \; T_i^\top E = \begin{pmatrix} E_{i1} \\ E_{i2} \end{pmatrix}, \; H T_i = \begin{pmatrix} H_{i1} & H_{i2} \end{pmatrix},$$

   where (C_{i1}, A_{i11}) are detectable.

Conceptual Algorithm

Let $\gamma > 0$. Then a distributed filter is obtained as follows:

1. compute T_i such that (C_i, A) are transformed into

$$T_i^\top A T_i = \begin{pmatrix} A_{i11} & 0 \\ A_{i21} & A_{i22} \end{pmatrix}, \; C_i T_i = \begin{pmatrix} C_{i1} & 0 \end{pmatrix}, \; T_i^\top E = \begin{pmatrix} E_{i1} \\ E_{i2} \end{pmatrix}, \; H T_i = \begin{pmatrix} H_{i1} & H_{i2} \end{pmatrix},$$

   where (C_{i1}, A_{i11}) are detectable.

2. Compute $\theta = (\theta_1, \theta_2, \ldots, \theta_N)$ such that $\theta L = 0$ and $\theta \mathbf{1}_N = N$. Define

$$\Theta := \mathrm{diag}(\theta_1, \theta_2, \ldots, \theta_N).$$

Conceptual Algorithm

Let $\gamma > 0$. Then a distributed filter is obtained as follows:

1. compute T_i such that (C_i, A) are transformed into

$$T_i^\top A T_i = \begin{pmatrix} A_{i11} & 0 \\ A_{i21} & A_{i22} \end{pmatrix}, \; C_i T_i = \begin{pmatrix} C_{i1} & 0 \end{pmatrix}, \; T_i^\top E = \begin{pmatrix} E_{i1} \\ E_{i2} \end{pmatrix}, \; HT_i = \begin{pmatrix} H_{i1} & H_{i2} \end{pmatrix},$$

   where (C_{i1}, A_{i11}) are detectable.

2. Compute $\theta = (\theta_1, \theta_2, \ldots, \theta_N)$ such that $\theta L = 0$ and $\theta \mathbf{1}_N = N$. Define

$$\Theta := \mathrm{diag}(\theta_1, \theta_2, \ldots, \theta_N).$$

3. Define $\mathcal{L} := \Theta L + L^\top \Theta$. Define $M_i := \begin{pmatrix} I_{v_i} & 0 \\ 0 & 0_{n-v_i} \end{pmatrix}$. Let $M := \mathrm{blockdiag}(M_i)$ and $T := \mathrm{blockdiag}(T_i)$. Compute $\epsilon > 0$ such that

$$T^\top (\mathcal{L} \otimes I_n) T + M > \epsilon I_{nN}.$$

Conceptual Algorithm

4. Define $G_{i1} := Q_{i1} C_{i1}^\top$, where $Q_{i1} > 0$ satisfy

$$A_{i11} Q_{i1} + Q_{i1} A_{i11}^\top - Q_{i1} C_{i1}^\top C_{i1} Q_{i1} < 0.$$

Conceptual Algorithm

4. Define $G_{i1} := Q_{i1} C_{i1}^\top$, where $Q_{i1} > 0$ satisfy

$$A_{i11} Q_{i1} + Q_{i1} A_{i11}^\top - Q_{i1} C_{i1}^\top C_{i1} Q_{i1} < 0.$$

5. Take $\kappa > 0$ such that we have

$$A_{i22} + A_{i22}^\top + H_{i2}^\top H_{i2} - \kappa\epsilon I_{n-v_i} + \frac{1}{\kappa\epsilon}(A_{i21} + H_{i2}^\top H_{i1})(A_{i21} + H_{i2}^\top H_{i1})^\top < 0.$$

Conceptual Algorithm

4. Define $G_{i1} := Q_{i1} C_{i1}^\top$, where $Q_{i1} > 0$ satisfy

$$A_{i11} Q_{i1} + Q_{i1} A_{i11}^\top - Q_{i1} C_{i1}^\top C_{i1} Q_{i1} < 0.$$

5. Take $\kappa > 0$ such that we have

$$A_{i22} + A_{i22}^\top + H_{i2}^\top H_{i2} - \kappa\epsilon I_{n-v_i} + \frac{1}{\kappa\epsilon}(A_{i21} + H_{i2}^\top H_{i1})(A_{i21} + H_{i2}^\top H_{i1})^\top < 0.$$

6. Compute $P_{i1} > 0$ satisfying the Lyapunov equation

$$(A_{i11} - G_{i1} C_{i1})^\top P_{i1} + P_{i1}(A_{i11} - G_{i1} C_{i1}) + H_{i1}^\top H_{i1} + \kappa I_{v_i} = 0.$$

Then, for all $\gamma > 0$ satisfying

$$\sum_{i=1}^{N} \operatorname{tr}\left[(E_{i1}^\top - D_i^\top G_{i1}^\top) P_{i1} (E_{i1} - G_{i1} D_i) + E_{i2}^\top E_{i2}\right] < \gamma,$$

the corresponding distributed filter with

$$G_i := T_i \begin{pmatrix} G_{i1} \\ 0 \end{pmatrix}, \quad F_i := \kappa \theta_i T_i \begin{pmatrix} P_{i1}^{-1} & 0 \\ 0 & I_{n-v_i} \end{pmatrix} T_i^\top, \quad i = 1, 2, \ldots, N$$

is $\mathcal{H}_2$ γ-suboptimal.

Brief Ideas

The brief ideas of this algorithm are that

1. we transform the $\mathcal{H}_2$ suboptimal filtering problem into a suboptimal $\mathcal{H}_2$ control problem for the associated global error system.

Brief Ideas

The brief ideas of this algorithm are that

1. we transform the $\mathcal{H}_2$ suboptimal filtering problem into a suboptimal $\mathcal{H}_2$ control problem for the associated global error system.
2. The gain matrices of the suboptimal $\mathcal{H}_2$ control problem should admit a block diagonal form.

Brief Ideas

The brief ideas of this algorithm are that

1. we transform the $\mathcal{H}_2$ suboptimal filtering problem into a suboptimal $\mathcal{H}_2$ control problem for the associated global error system.
2. The gain matrices of the suboptimal $\mathcal{H}_2$ control problem should admit a block diagonal form.
3. One of the main challenges is how to deal with the Laplacian matrix. What we do is to get rid of the Laplacian matrix by transforming it into a positive definite matrix.

Contents

1 Introduction
- Standard $\mathcal{H}_2$ Filtering Problem
- Distributed $\mathcal{H}_2$ Filtering Problem
- Literature

2 Problem Formulation

3 Main Result
- Conceptual Algorithm
- Brief Ideas

4 Conclusion

Conclusion

In this talk

- I have formulated an $\mathcal{H}_2$ suboptimal distributed filtering problem.
- I have provided a conceptual algorithm to compute one such filter.

Conclusion

In this talk

- I have formulated an $\mathcal{H}_2$ suboptimal distributed filtering problem.
- I have provided a conceptual algorithm to compute one such filter.

J. Jiao, H. L. Trentelman, and M. K. Camlibel, "H_2 and H_∞ Suboptimal Distributed Filter Design for Linear Systems", available on arXiv.

Thank you for your attention!