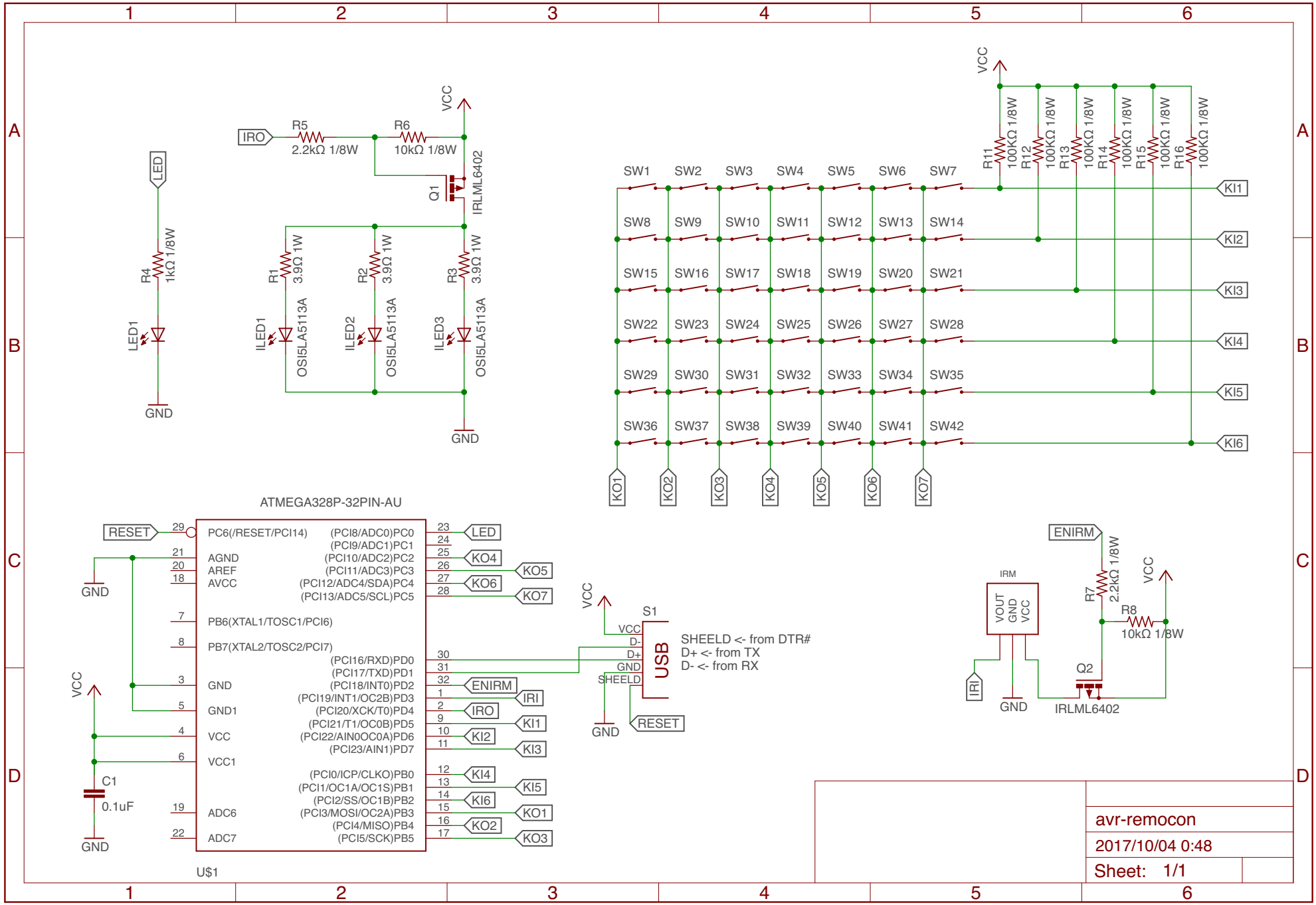

2017/10/04 3:53 /Users/ikeda/Documents/eagle/avr-remocon/avr-remocon.sch (Sheet: 1/1)