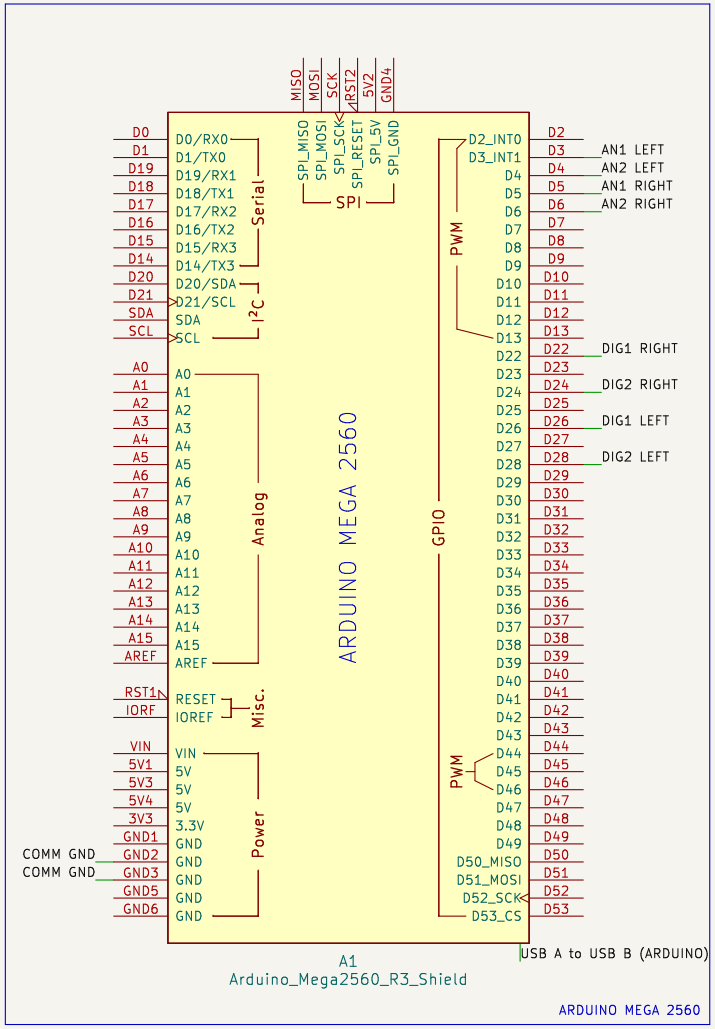

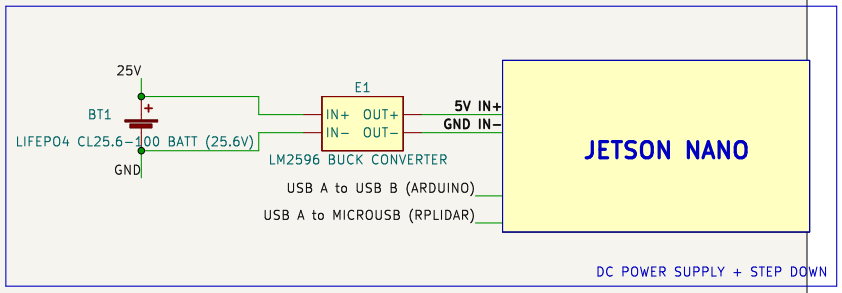

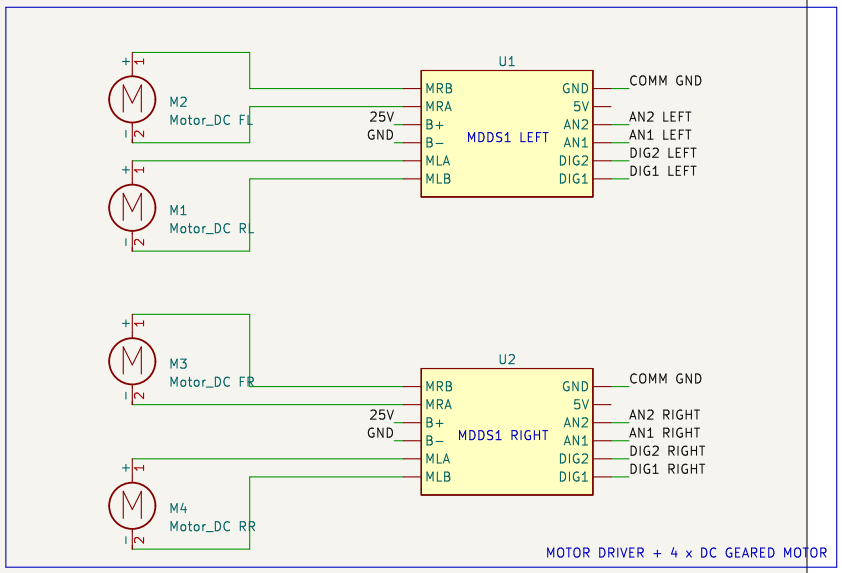

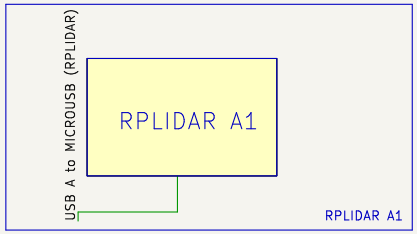

Sheet:
File: AGV.kicad_sch

Title:

Size: A4	Date:	Rev:
KiCad E.D.A. kicad 7.0.1		Id: 1/1