PNAS RESEARCH ARTICLE | ENVIRONMENTAL SCIENCES

Four-hour thunderstorm nowcasting using a deep diffusion model for satellite data

Kuai Dai[a,b], Xutao Li[a,1], Junying Fang[c], Yunming Ye[a,1], Demin Yu[a], Hui Su[b], Di Xian[d], Danyu Qin[d], and Jingsong Wang[d,1]

Edited by Richard Rotunno, National Center for Atmospheric Research, Boulder, CO; received July 2, 2025; accepted October 28, 2025

Convection (thunderstorm) develops rapidly within hours and is highly destructive, posing a significant challenge for nowcasting and resulting in substantial losses to infrastructure and society. After the emergence of AI-based methods, convection nowcasting has experienced rapid advancements, with its performance surpassing that of physics-based numerical weather prediction and other conventional approaches. However, the lead time and coverage of it still leave much to be desired and hardly meet the needs of disaster emergency response. Here, we propose a deep diffusion model for satellite data (DDMS) to establish an AI-based convection nowcasting system. Specifically, DDMS employs diffusion processes to effectively simulate complicated spatiotemporal evolution patterns of convective clouds, achieving more accurate forecasts of convective growth and dissipation over longer lead times. Additionally, it combines geostationary satellite brightness temperature data and domain knowledge from meteorological experts, thereby achieving planetary-scale forecast coverage. During long-term tests and objective validation based on the FengYun-4A satellite, our system achieves effective convection nowcasting up to 4 h, with broad coverage (about 20,000,000 km^2), remarkable accuracy, and high resolution (15 min; 4 km). Its performance reaches a new height in convection nowcasting compared to the existing models. In terms of application, our system is highly transferable with the potential to collaborate with multiple satellites for global convection nowcasting. Furthermore, our results highlight the remarkable capabilities of diffusion models in convective clouds forecasting, as well as the significant value of geostationary satellite data when empowered by AI technologies.

convection nowcasting | geostationary satellite | AI

Significance

Severe storms threaten human lives and cause substantial economic losses. In this work, we present a storm nowcasting system based on satellite data and AI techniques. It extends forecasts up to 4 h in advance, providing more accurate and detailed predictions of storm growth and decay. Its potential for global application offers an effective means to enhance preparedness and reduce the impact of severe storms worldwide.

Severe convective weather often leads to sudden meteorological disasters like hailstorms, thunderstorms, strong winds, and tornadoes (1–3). These events have significant adverse effects on various aspects of daily life and economic activities such as transportation, agriculture, energy production, and societal management (4, 5). As a conventional approach for convective weather nowcasting and forecasting, the numerical weather prediction (NWP) solves the physical equations in the atmosphere to make predictions (6, 7). While traditional NWP has advantages in large-scale weather forecast from several hours to days ahead, it has historically struggled with localized nowcasting due to challenges in resolving rapidly evolving mesoscale or convective-scale processes (8, 9). However, advances such as the Warn-on-Forecast System (WoFS) (10, 11) have demonstrated the potential of high-resolution modeling and rapid data assimilation to improve probabilistic convective-scale predictions. In parallel, advection-based methods such as STEPS (12) or PySTEPS (13) remain widely used alternatives, leveraging physical motion principles to extrapolate current radar or satellite observations into short-term forecasts. The advection-based approaches continue struggling to provide precise nowcasting outcomes due to two primary factors. First, the estimated advection tendency is unable to capture the complexity of atmospheric variability, such as cloud formation and dissipation. Second, these methods are limited in their ability to leverage extensive historical data for modeling nonlinear spatiotemporal dynamics, since they estimate the motion field based solely on the recent observations (14).

In recent years, AI technologies largely promote the forward of weather nowcasting. With advanced neural network architectures (8, 15, 16), the AI-based nowcasting models learn spatiotemporal evolution patterns from historical meteorological data in an end-to-end optimization manner. Once trained, such models can efficiently make predictions with given observations. Specifically, the deep generative model of rainfall (DGMR) (8) introduces generative adversarial networks (GANs) (17) to improve the nowcasting results and achieves spatiotemporally consistent predictions with a lead time of 90 min. As a state-of-the-art precipitation nowcasting approach, NowcastNet (15) designs a special evolution network to learn physical knowledge to guide prediction and achieves 3-h extreme precipitation prediction. Despite the progress delivered by such existing AI-based nowcasting approaches, they still fall short due to their limited lead

Author affiliations: [a]School of Computer Science and Technology, Harbin Institute of Technology, Shenzhen 518055, China; [b]State Key Laboratory of Climate Resilience for Coastal Cities, Department of Civil and Environmental Engineering, Hong Kong University of Science and Technology, Hong Kong, China; [c]Institute of Tropical and Marine Meteorology, China Meteorological Administration, Guangzhou 510080, China; and [d]National Satellite Meteorological Center, China Meteorological Administration, Beijing 100081, China

Author contributions: K.D., X.L., Y.Y., and J.W. designed research; K.D., J.F., and D.Y. performed research; X.L., J.F., H.S., D.X., D.Q., and J.W. contributed new reagents/analytic tools; K.D., Y.Y., and H.S. analyzed data; and K.D. wrote the paper.

The authors declare no competing interest.

This article is a PNAS Direct Submission.

Copyright © 2025 the Author(s). Published by PNAS. This article is distributed under Creative Commons Attribution-NonCommercial-NoDerivatives License 4.0 (CC BY-NC-ND).

[1]To whom correspondence may be addressed. Email: lixutao@hit.edu.cn, yeyunming@hit.edu.cn, or wangjs@cma.gov.cn.

This article contains supporting information online at https://www.pnas.org/lookup/suppl/doi:10.1073/pnas.2517520122/-/DCSupplemental.

Published December 16, 2025.

Downloaded from https://www.pnas.org by SUN YAT-SEN UNIVERSITY on December 16, 2025 from IP address 202.116.81.14.

time, spatial scale, and accuracy, especially in heavy rainfall closely related to convection.

As satellite remote sensing technologies advance rapidly, the latest generation of geostationary meteorological satellites now offers extensive atmospheric monitoring capabilities, enabling them to detect thunderstorm initiation earlier than radars (18–23). By utilizing the infrared brightness temperature band, these satellites achieve high spatiotemporal resolution convective monitoring, which is quite close to that of ground-based radars. Specifically, lower brightness temperatures correspond to colder and higher cloud tops, which are widely recognized as a proxy for stronger convective activity. Furthermore, convection nowcasting with geostationary satellite has gained widespread adoption in meteorological departments globally (24–26). Compared to nowcasting convective activities based on ground-based radar data (whether from single stations or networked), a prominent advantage of nowcasting convection using brightness temperatures from geostationary satellites is the ability to monitor large areas at a planetary scale, including continuous 24-h coverage of remote regions and oceans where radar installations do not exist. Recent studies introduce AI techniques to detect convective initiation (27–29) or make convection nowcasting (23) with geostationary satellite data. In addition, some works (30–33) such as ProbSevere-V3 (31) combine satellite data and ground radar (32) or NWP results (33) for severe weather nowcasting. However, they provide relatively accurate nowcasting results only in a short period (20 min—2 h). The essential reason is the lack of stable and reliable AI architectures designed to model the spatiotemporal evolution patterns of convective clouds, especially in the reasonable simulation of stochastic and uncertain motion patterns in the temporal evolution process of convective clouds.

Inspired by the natural advantages of diffusion models in modeling stochastic processes (34), we propose a perspective that the stochastic motion tendency of convective clouds can be regarded as a physical diffusion process, which can be effectively modeled with forward and backward procedures of diffusion models (35). Moreover, a recent work (36) systematically compares different diffusion models for cloud modeling and demonstrates their advantages in capturing cloud growth and decay, as well as in preserving high-resolution details. Based on the insights above, we propose a deep diffusion model to establish a convective nowcasting system utilizing satellite brightness temperature data and domain knowledge from meteorological experts, and conduct long-term tests and objective validation based on the FengYun-4A satellite. This forecasting system achieves effective convection nowcasting up to 4 h and features key forecasting capabilities such as broad coverage (about 20,000,000 km^2), high accuracy, and high spatiotemporal resolution (15 min; 4 km). Its performance reaches a new height in convection nowcasting compared to both the existing state-of-the-art AI models and the most advanced traditional models. Moreover, the forecasting system is highly transferable, with relevant methodologies and algorithms that can be easily transferred across different satellite platforms.

High-Resolution Convection Nowcasting System

We develop a high-resolution convection nowcasting system with deep learning techniques. Specifically, we formulate the convection nowcasting task as two stages, namely, satellite nowcasting and convection detection. For the satellite nowcasting, we propose the DDMS to model spatiotemporal patterns of convective clouds to predict the next 4-h satellite sequences. For the convection detection, we adopt a combined manner of deep learning and expert knowledge to achieve the convective clouds recognition. In this article, we utilize FengYun-4A satellite data (37) from 2018 to 2021 y as training data and employ 2022 and 2023 data as the test data. The designed DDMS is trained on a GPU server with eight RTX A6000 GPUs (48 GB memory) and takes two million training batches to converge (about 30 d).

As shown in Fig. 1, the DDMS convection nowcasting system consists of a data process module, a satellite nowcasting module, and a convection detection module. First, in the data process module, collected FengYun-4A satellite images (AGRI-L1 RGEC and DISK data, 4 km, 10.8 μm-band) are first temporally sampled into sequences with a 15-min interval and then spatially cropped into 256 × 256-size parts to reduce the GPU memory demand of the satellite nowcasting module in the training phase. Second, the designed DDMS model is trained to predict the next 4-h satellite sequences with historical 2-h ones as input. Here, the 2-h history window provides sufficient temporal context for capturing the key developmental features of convective systems, which typically evolve on the scale of a few hours, while also keeping the computational cost manageable. Notably, similar settings can be found in related weather nowcasting studies (14, 15)

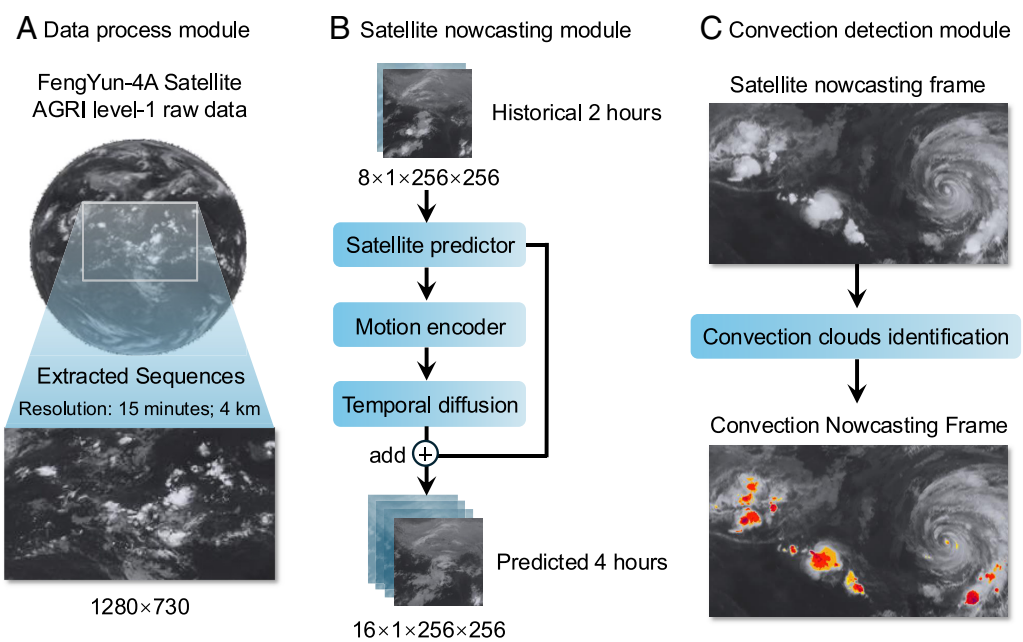

Fig. 1. Framework of DDMS convection nowcasting system. (*A*) Data process module, collected FengYun-4A AGRI-L1-RGEC and DISK data are processed into regular satellite sequences through spatial cropping and temporal sampling operations. (*B*) Satellite nowcasting module, predicts the next 4-h satellite data based on the historical 2-h satellite data. (*C*) Convection detection module identifies the convective clouds in the predicted satellite sequences.

Downloaded from https://www.pnas.org by SUN YAT-SEN UNIVERSITY on December 16, 2025 from IP address 202.116.81.14.

with AI techniques. Since our model is a fully convolutional network, once trained, it can be tested with arbitrary size sequences such as 1,280 × 730-size (about 20,000,000 km^2 coverage). Third, the convection detection module accounts for automatically recognizing the convective clouds in the predicted satellite sequences. To achieve this, we manually label a convective cloud dataset based on FengYun-4A with the guidance of experts in the National Satellite Meteorological Center and train an UNet to detect the convective clouds.

Through the three modules, we build a high-resolution convection nowcasting system. It surpasses the traditional nowcasting approaches Persistency and PySTEPS and the AI-based nowcasting methods PredRNN-v2 and NowcastNet, in terms of multiscaled quantitative evaluation. Besides, in the severe convective weather events, our method more accurately predicts the growth, dissipation, and intensity of convective clouds. Notably, the intensity of convective clouds here is not directly predicted. Instead, the forecasting brightness temperature is employed as a potential measure of intensity, while the convection detection module predicts the spatial coverage of convective clouds.

Results

Evaluation Settings. We validate the nowcasting ability of the proposed DDMS against the state-of-the-art traditional and AI-based prediction methods. We employ a classic approach Persistency (38) and an advection-based nowcasting method PySTEPS (13), as baselines of traditional methods, which have been widely used in meteorological centers worldwide (12, 39). We select PredRNN-v2 (40) and NowcastNet (15) as baselines of deep learning methods. The PredRNN-v2 is a powerful spatiotemporal prediction model, and the NowcastNet delivers state-of-the-art performance for 3-h radar nowcasting, both of which are deployed for the China Meteorological Administration for operational nowcasting. In this work, we utilize FengYun-4A satellite 10.8 μm-band observations in 2018–2021 to train the above models and employ spring and summer samples (May to August) in 2022–2023 to evaluate the nowcasting performance. During these months, the motions of convective clouds are most fierce, and the clouds' growth and decay are common in East Asia, accompanied by abrupt meteorological disasters.

The details of data processing, including the construction of the training and validation datasets during the training procedure, are described in the Data Processing Module section. For PySTEPS, we follow the standard configuration and apply the dense Lucas–Kanade optical flow method for extrapolation. For PredRNN-v2 and NowcastNet, we adopt the official open-source settings, which ensure reasonable configurations. Furthermore, all AI models are trained with an early stopping strategy to maintain a fair comparison.

Convection Nowcasting Results.

Quantitative evaluation. Fig. 2 shows the quantitative convection nowcasting results of DDMS, NowcastNet, PredRNN-v2, PySTEPS, and Persistency, w.r.t lead times and months. The critical success index (CSI) is a key evaluation metric that measures the nowcasting accuracy

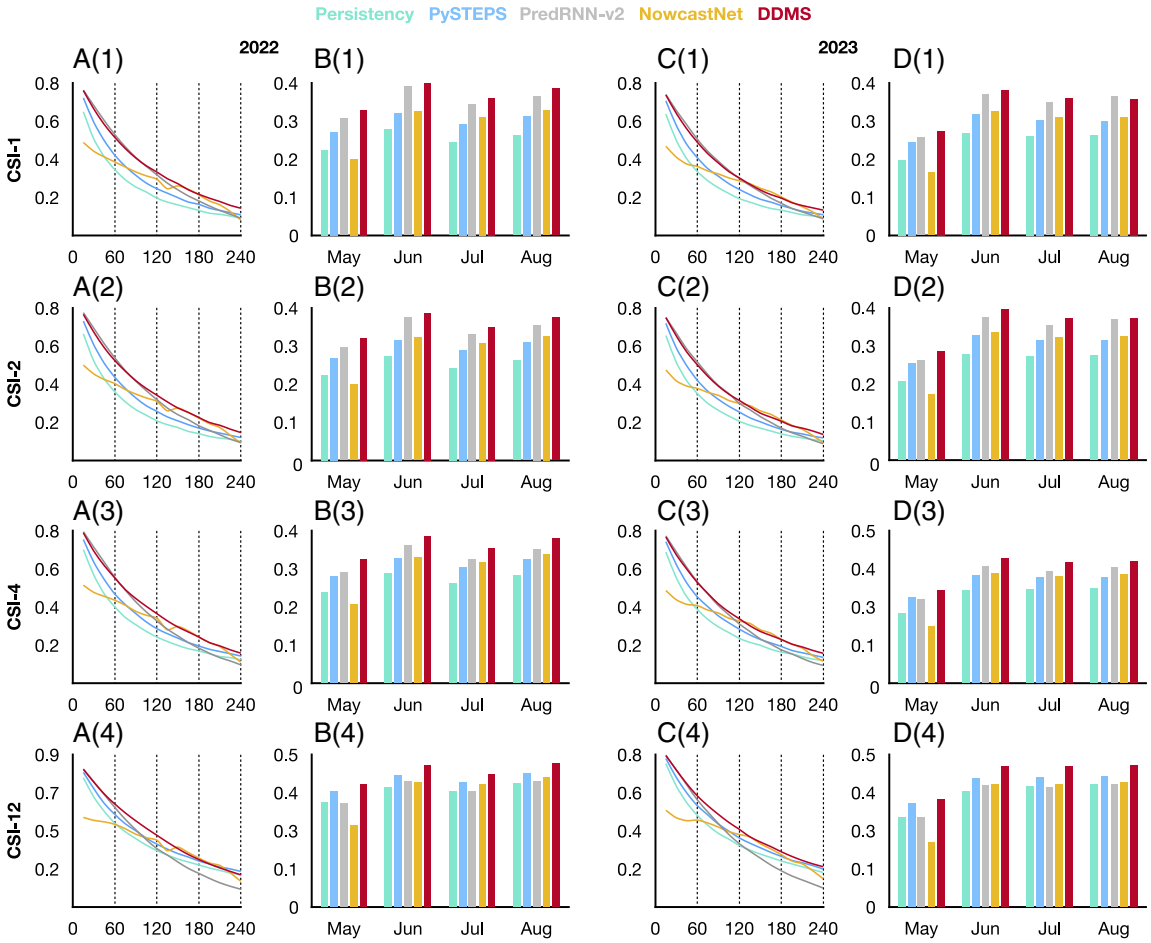

Fig. 2. Quantitative evaluation of DDMS. Curves of the critical success index at different spatial scales, CSI-1 (4 km), CSI-2 (8 km), CSI-4 (16 km), and CSI-12 (48 km) with nowcasting lead time averaged from May to August in 2022 [*A*(1)–*A*(4)]. Histograms of the CSI scores for 2022 [*B*(1)–*B*(4)] May, June, July, and August. Curves of the critical success index with nowcasting lead time averaged from May to August in 2023 [*C*(1)–*C*(4)]. Histograms of the CSI scores for 2023 [*D*(1)–*D*(4)] May, June, July, and August. Red (yellow, gray, blue, cyan) curves and bars indicate DDMS (NowcastNet, PredRNN-v2, PySTEPS, and Persistency).

Downloaded from https://www.pnas.org by SUN YAT-SEN UNIVERSITY on December 16, 2025 from IP address 202.116.81.14.

Table 1. Quantitative performance improvements of DDMS over PredRNN-v2 (%)

Metrics	2022-05	2022-06	2022-07	2022-08	2023-05	2023-06	2023-07	2023-08
CSI-1	7.30	2.10	4.66	4.82	6.64	2.35	3.44	−1.75
CSI-2	8.56	3.18	5.67	5.75	8.21	3.49	4.75	0.08
CSI-4	11.64	6.09	8.33	8.19	11.70	6.89	8.19	4.86
CSI12	18.61	12.51	14.71	14.23	20.61	15.26	17.25	15.88

of convective clouds. Here, we adopt CSI scores at different spatial scales (CSI-1, CSI-2, CSI-4, and CSI-12) to comprehensively validate the prediction results. In particular, we conduct experiments using FengYun-4A data from 2022 and 2023 to validate the prediction stability of the nowcasting methods across different years.

First, from the perspective of forecasting lead time across the four evaluated spatial scales (4-, 8-, 16-, and 48-km), DDMS consistently outperforms traditional methods Persistency and PySTEPS (Fig. 2 *A*(1)–*A*(4) and *C*(1)–*C*(4)). This advantage is evident at all evaluated scales and is generally more pronounced at shorter lead times, although the performance gap narrows at coarser scales (16- and 48-km) during the longer forecasting hours. Second, the AI-based method NowcastNet produces competitive results over a short period (from about 120 to 210 min), particularly at the 4-km scale, but it performs considerably worse outside this interval. Third, PredRNN-v2 shows moderate advantages during the first 2 h at small scales, while its performance declines at longer lead times and at coarse scales.

Next, we analyze the forecasting abilities of DDMS and baseline methods across months and spatial scales. DDMS consistently delivers the best performance in nearly all months (Fig. 2 *B*(1)–*B*(4) and *D*(2)–*D*(4)). At the 4-km scale, the AI models NowcastNet and PredRNN-v2 generally outperform Persistency and PySTEPS, which highlights the advantages of AI techniques in modeling high-resolution convective systems. In contrast, Persistency and PySTEPS exhibit relatively improved performance at the 48-km spatial scale, indicating that advection-based approaches can effectively capture large-scale cloud patterns. Compared with the baselines, DDMS maintains a clear superiority across all scales. Finally, PredRNN-v2 shows competitive results at the 4-km scale evaluation. However, its performance declines at the 8-km, 16-km, and 48-km scale evaluations. This is mainly because PredRNN-v2 is trained under a MSE loss function, which encourages conservative and averaged predictions. Such forecasts can reduce false alarms and produce seemingly favorable quantitative results, but they inevitably weaken the representation of convective growth or dissipation at coarser scales. Specifically, Table 1 presents the quantitative improvements of DDMS over PredRNN-v2 at different scales, which demonstrates the advantages of DDMS in modeling large-scale convective cloud systems.

Case evaluation. To visually evaluate the nowcasting ability of DDMS, we report two nowcasting results of typical severe convection events in Figs. 3 and 4. PySTEPS preserves sharp appearance details but fails to accurately capture the complex motion patterns of clouds, resulting in large deviations from observations. The limitations stem from the difficulty of advection-based physical equations in characterizing the nonstationary motions such as rotation, dissipation, and accumulation. Compared with PySTEPS, NowcastNet and PredRNN-v2 are able to capture the growth and dissipation of convection. In Fig. 3, the left cell in the white box grows during the first 2 h and dissipates in the following 2 h, while the right cell continuously dissipates throughout the 4 h. NowcastNet significantly overestimates the growth of both cells in the first 2 h and overpredicts their dissipation in the last 2 h. PredRNN-v2 makes similar predictions in the first 2 h, which are better than those of NowcastNet, but it still fails to forecast the dissipation of the right cell in the last 2 h. In contrast, our proposed DDMS can distinguish between the growth and dissipation of different cells under varying forecasting horizons, thereby producing more accurate predictions. In Fig. 4, DDMS again

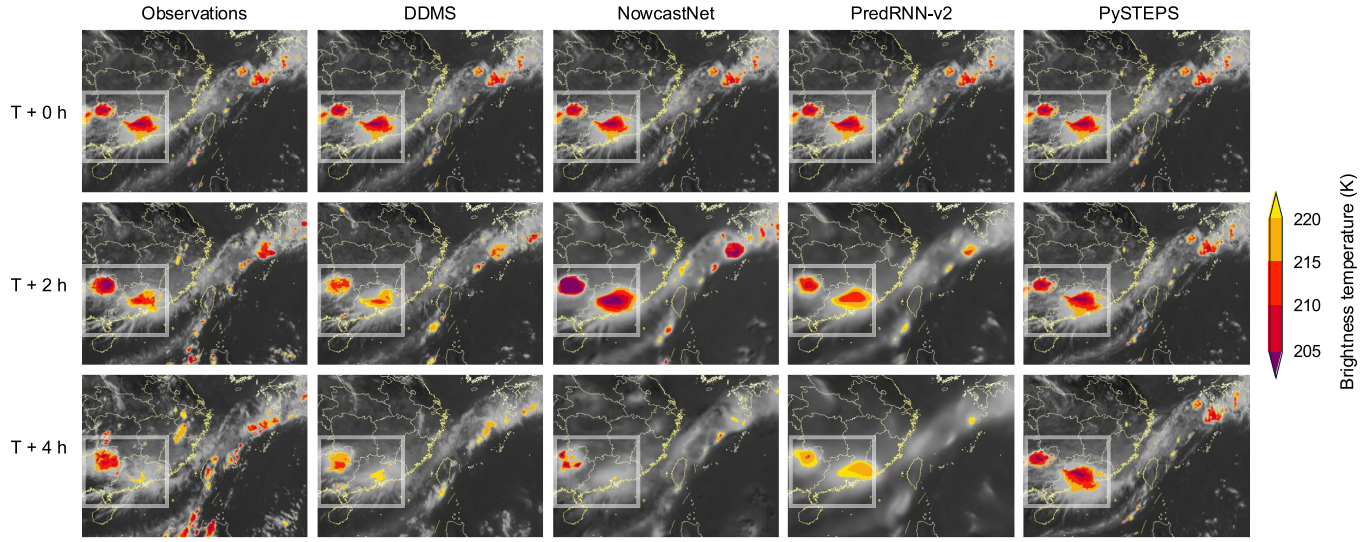

Fig. 3. Case evaluation of a severe convection event with an extreme rainstorm starting on 16 June 2022 in South China. This convection event is also accompanied by flood warnings of the Pearl River. The color denotes the predicted brightness temperature (K) of convective clouds. The locations of the extreme event are marked with white boxes. The samples are cropped to highlight local details. From T + 0 h to T + 2 h, NowcastNet significantly overestimates the growth of the two major cells, especially the right cell, which is actually dissipating. From T + 2 h to T + 4 h, however, it overpredicts the dissipation. PredRNN-v2 makes similar predictions in the first 2 h, which are better than those of NowcastNet. However, in the last 2 h, PredRNN-v2 fails to capture the dissipation of the right cell. PySTEPS is unable to predict either the growth or dissipation of the convective clouds. The three methods fail to deliver satisfactory 4-h convection nowcasting, while our proposed DDMS produces much more accurate nowcasting results. (Note: The images in the T + 0 h row are identical, which helps visualize the convection growth and dissipation from T + 0 h to T + 2 h.)

Downloaded from https://www.pnas.org by SUN YAT-SEN UNIVERSITY on December 16, 2025 from IP address 202.116.81.14.

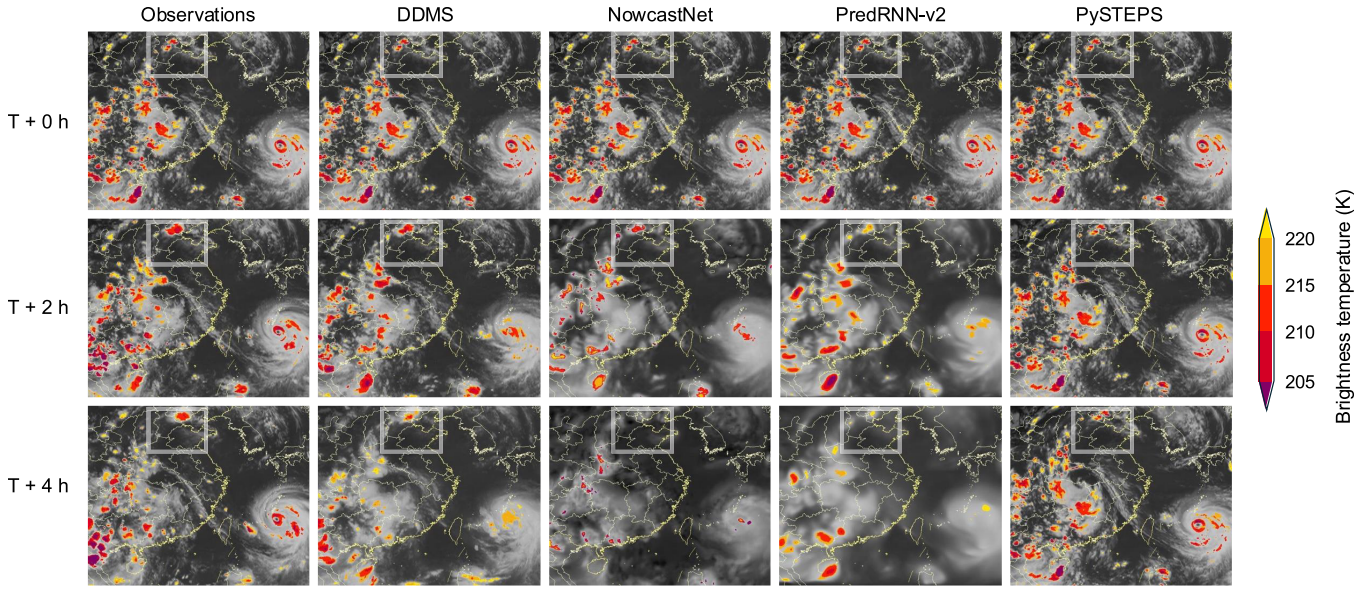

Fig. 4. Case evaluation of a severe convection event with extreme rainstorm starting on 29 July 2023 in Beijing–Tianjin–Hebei region of China. This convection event is affected by the typhoon Dusuirei (in the *Bottom-Right* corner). NowcastNet and PredRNN-v2 cannot provide useful prediction results at the 4-h lead time, while PySTEPS fails to model the growth and dissipation of convective cells in the Beijing–Tianjin–Hebei region. Compared with the methods, DDMS again delivers more accurate nowcasting results. (Note: The images in the T + 0 h row are identical, which helps visualize the convection growth and dissipation from T + 0 h to T + 2 h.)

more accurately forecasts the convection growth in the first 2 h and provides better predictions of the dissipation in the last 2 h. More convection nowcasting samples are provided in *SI Appendix*.

Discussion

In this article, we propose DDMS and build a high-resolution convection nowcasting system of satellite data. Our model is trained on 2018–2021 FengYun-4A satellite data and tested on 2022–2023 data. Compared with state-of-the-art nowcasting baseline approaches, DDMS consistently delivers the most accurate and skillful 4-h convection nowcasting results in terms of quantitative and case evaluation.

Convection nowcasting can be further improved in some aspects. In terms of methodology, more efficient AI techniques can be explored to deliver more accurate and higher spatiotemporal resolution convection nowcasting. Besides, from the perspective of data, fusing multisource data such as satellite and radar observations can promote the accuracy and interpretability of AI-based methods for convection nowcasting. Also, DDMS's training cost is large due to the diffusion architecture, and it is important to explore more efficient diffusion models. In addition, explicitly incorporating the conventional physical knowledge as constraints for AI-based methods is a promising direction. At last, as a diffusion-based forecasting method, DDMS can produce ensemble predictions at inference, which provides a natural way to quantify forecasting uncertainty. Though ensemble predictions are not evaluated here, we highlight this as an important potential strength of DDMS for future probabilistic convection nowcasting applications. We hope our work can inspire more researchers to investigate convection nowcasting with meteorological satellite data.

Methods

Here, we introduce the details of the data process module, satellite nowcasting module, and convection detection module in the high-resolution convection nowcasting systems, as well as the evaluation metrics and training settings.

Data Process Module. In this article, we collect FengYun-4A meteorological satellite AGRI-L1 data from 2018 to 2023. Data from 2018 to 2021 are utilized for training the satellite nowcasting module, while the remainder is for convection nowcasting evaluation. With a multichannel visible infrared scanning imager, FengYun-4A can produce 14-waveband satellite images, where different wavebands aim at capturing different meteorological elements such as water vapor and temperature. To achieve convection nowcasting, we select the 12th channel (10.8 μm-band, long-wave infrared) images with 4 km spatial resolution, which is suitable for observing the convective clouds in the atmosphere. The FengYun-4A satellite scans the China area (REGC) and the entire observation area (DISK) with an interval of 4 to 6 min and 15 min, respectively. First, we extract 24-frame sequences with an interval of 15 min, where each frame is 1,280 × 730-size. Second, to save the training memory demand, we crop 256 × 256-size parts of each frame and select 1% samples for constructing the validation dataset. In this manner, we obtain 441,895 sequences for training the satellite nowcasting module and 4,355 sequences for validation, during the training procedure. Notably, the brightness temperature values decrease from 320 to 180, which is rescaled to [0, 255] before being represented as grayscale images. Moreover, the inputs of PredRNN-v2 are normalized to the range [0, 1], while NowcastNet does not adopt normalization. The inputs of DDMS are normalized to the range [−1, 1].

Satellite Nowcasting Module. As shown in Fig. 5, the module consists of three parts, namely, a satellite predictor P, a motion encoder M, and a temporal diffusion part D. First, the satellite predictor accounts for producing the predicted satellite sequence $\widehat{Y} = \{\widehat{X}_{l+1}, \widehat{X}_{l+2}, \ldots, \widehat{X}_{l+k}\} \in \mathbb{R}^{k\times m\times n}$, with given the past frames $X = \{X_1, X_2, \ldots, X_l\} \in \mathbb{R}^{l\times m\times n}$. m and n denote the width and length of each satellite image, respectively. Second, the temporal diffusion part is specially designed to model the temporal evolution dynamics of divergence between the predicted sequence $\widehat{Y}$ and observation sequence $Y = \{X_{l+1}, X_{l+2}, \ldots, X_{l+k}\}$. Third, the motion encoder is designed to capture the long-term motion tendency of the predicted sequence $\widehat{Y}$, to guide the denoising process of the temporal diffusion part. By combining the predicted sequence by satellite predictor P and the reconstructed difference sequence by temporal diffusion D, we obtain the final prediction sequence $\widehat{Y}_{final} = P(x) + D(Y - \widehat{Y})$. Next, we introduce details of the three parts and the training loss of the satellite nowcasting module.

Satellite predictor. Overall, the satellite predictor follows a classic RNN architecture ConvGRU (41). It is a simple yet effective spatiotemporal prediction baseline, whose key formulae are defined as follows:

Downloaded from https://www.pnas.org by SUN YAT-SEN UNIVERSITY on December 16, 2025 from IP address 202.116.81.14.

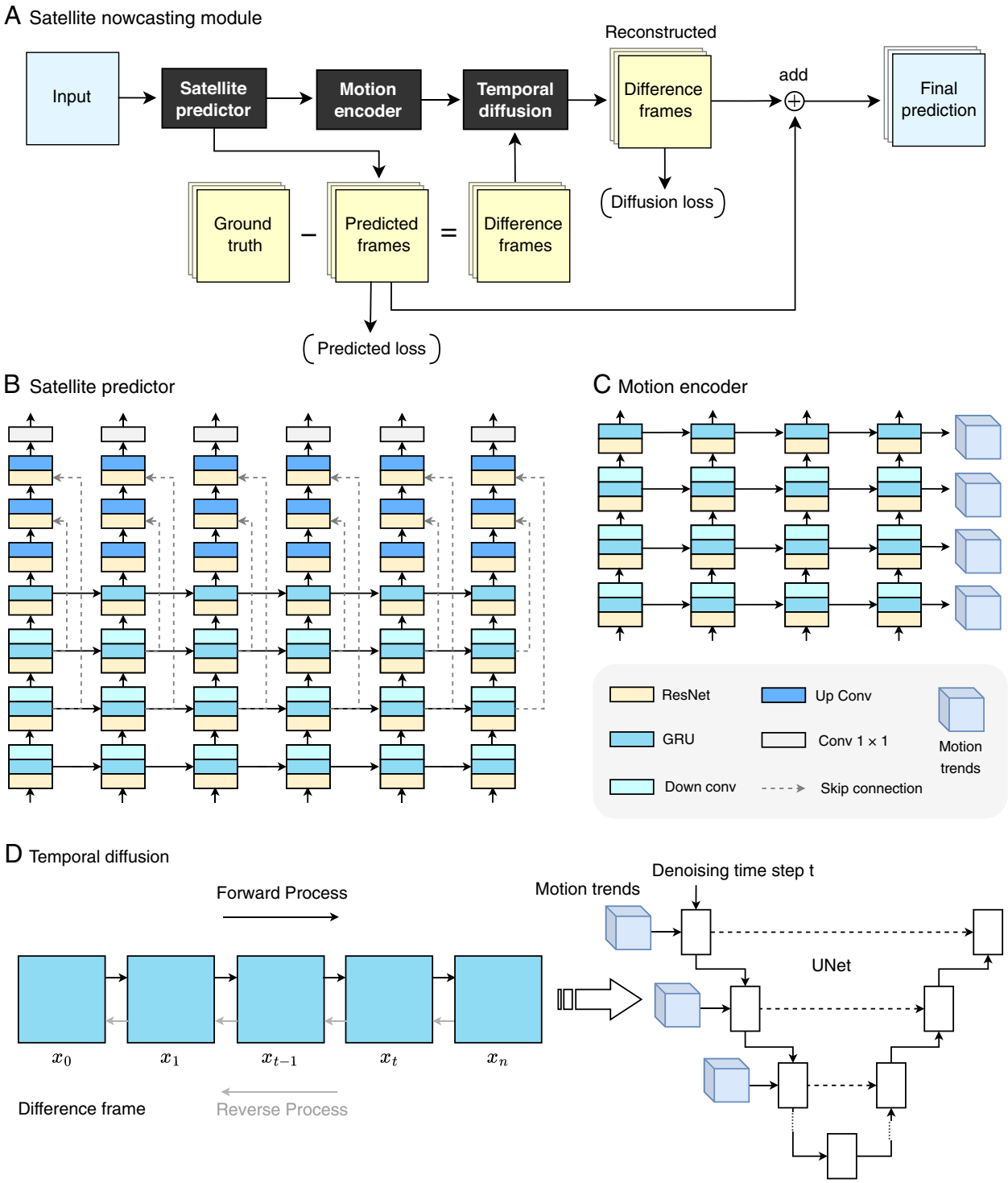

Fig. 5. Pipelines of the satellite nowcasting module. (*A*), The overall layout of the satellite nowcasting module, which contains a satellite predictor, a motion encoder, and a temporal diffusion part. The satellite predictor accounts for producing the predicted sequence with given historical frames. With the guidance of the motion encoder, the temporal diffusion part aims to model temporal evolution dynamics of difference sequences between the prediction and observation. The final prediction is obtained by combining the predicted sequence and the reconstructed difference sequence. (*B*), The architecture details of the satellite predictor, which contains multiscale GRU units. (*C*), The architecture details of the motion encoder, which is an encoder part of the satellite predictor and has independent parameters. (*D*), The workflow of the temporal diffusion part for i-th difference satellite frame. The conditional UNet is employed to predict a noise in the reverse process.

$$
\begin{aligned}
z_t &= \sigma\left(W_{xz} * \mathcal{X}_t + W_{hz} * \mathcal{H}_{t-1} + b_z\right),\\
r_t &= \sigma\left(W_{xr} * \mathcal{X}_t + W_{hr} * \mathcal{H}_{t-1} + b_r\right),\\
\tilde{\mathcal{H}}_t &= \tanh\left(W_{xh} * \mathcal{X}_t + W_{hh} * \left(r_t \circ \mathcal{H}_{t-1}\right) + b_h,\right.\\
\mathcal{H}_t &= \left(1 - z_t\right) \circ \mathcal{H}_{t-1} + z_t \circ \tilde{\mathcal{H}}_t.
\end{aligned}
\qquad [1]
$$

The z_t and r_t denote the update gate and reset gate, respectively. The $\tilde{\mathcal{H}}_t$ and $\mathcal{H}_t$ represent the candidate hidden state and final hidden state, respectively. The $*$ is the convolution operation, the matrices like W_{xz} and W_{hz} are corresponding weights, and terms like b_z, b_r, and b_h are biases. σ and tanh are activation functions, and the symbol $\circ$ denotes the Hadamard multiplication.

Based on the classic ConvGRU backbone, the satellite predictor introduces the deep residual mechanism and skip connection manner to enhance spatiotemporal modeling ability. Specifically, it contains an encoder part and a decoder part. In the encoder, three ResNet-GRU-Conv block layers and one ResNet-GRU block layer are utilized to encode multilevel spatiotemporal dynamics of satellite sequences. In

Downloaded from https://www.pnas.org by SUN YAT-SEN UNIVERSITY on December 16, 2025 from IP address 202.116.81.14.

the decoder, three ResNet-DeConv block layers and one convolutional layer with a kernel size of 1 are employed to produce predicted frames by decoding the multilevel spatiotemporal features. Notably, in each time step, different level hidden states generated by the GRU units in the encoder are passed to the decoder in a skip connection manner, which can better preserve spatial details. In an autoregressive manner, the satellite predictor produces the k-length predicted sequence.

Motion encoder. The motion encoder adopts the previous four layers of a satellite predictor to encode the predicted sequence to obtain different level motion patterns at each time step, which are utilized to guide the denoising process of the temporal diffusion part. In particular, the motion encoder does not share parameters with the satellite predictor and is removed the skip connection operations. The encoding procedure is formally defined as follows:

$$\text{Motions}^i = M\left(\widehat{Y}_i\right), \quad [2]$$

$$\text{Motions}^i = \left\{\text{Motion}_1^i,\ \text{Motion}_2^i,\ \text{Motion}_3^i,\ \text{Motion}_4^i\right\}. \quad [3]$$

The Motion_1^i, Motion_2^i, Motion_3^i, and Motion_4^i denote different level motion patterns at the i-th time step.

Temporal diffusion. With the guidance of the motion encoder, the temporal diffusion part is proposed to model the temporal evolution of the difference satellite sequence. To train the diffusion network, we adopt a training paradigm provided by DDPM (35), which treats the diffusion process as a first-order Markov-chain procedure. Specifically, in the forward process, Gaussian noise is gradually added to destroy the original data x_0, then we obtain T different states $\{x_1, x_2, \ldots, x_T\}$, which is formally defined as follows:

$$q\left(x_{1:T} \mid x_0\right) = \prod_{t=1}^{T} q\left(x_t \mid x_{t-1}\right), \quad [4]$$

$$q\left(x_t \mid x_{t-1}\right) = \mathcal{N}\left(x_t \mid \sqrt{\alpha_t} x_{t-1}, \left(1-\alpha_t\right)\mathbf{I}\right). \quad [5]$$

$1-\alpha_t$ is the predefined covariance hyperparameter at the t-th time step. $\alpha_t \in (0,1)$, $t \in \{1, 2, \ldots, T\}$, and $\alpha_1 > \alpha_2 > \ldots > \alpha_T$. Through formulae (4) and (5), t-th state x_t can be obtained in one step as folows:

$$q\left(x_t \mid x_0\right) = \int q\left(x_{1:t} \mid x_0\right) dx_{1:(t-1)} = \mathcal{N}\left(x_t \mid \sqrt{\overline{\alpha}_t} x_0, \left(1-\overline{\alpha}_t\right)\mathbf{I}\right), \quad [6]$$

where $\overline{\alpha}_t = \alpha_1 \alpha_2 \ldots \alpha_t$. When $t \to \infty$, then $\overline{\alpha}_t \to 0$, and we can get that $x_t \to \mathcal{N}(0, \mathbf{I})$.

In the reverse process, we aim to recover the original data x_0 from the Gaussian noise x_T. Formally, the denoising process is defined as follows:

$$p\left(x_0\right) = \int p\left(x_{0:T}\right) dx_{1:T}, \quad [7]$$

$$p\left(x_{0:T}\right) = p\left(x_T\right) \prod_{t=1}^{T} p\left(x_{t-1} \mid x_t\right), \quad [8]$$

$$p\left(x_{t-1} \mid x_t\right) = \mathcal{N}\left(x_{t-1} \mid \mu\left(x_t, t\right), \sigma_t \mathbf{I}\right). \quad [9]$$

The $p\left(x_T\right) = \mathcal{N}(0, \mathbf{I})$ is known, and the σ_t is fixed and computed by $\overline{\alpha}_t$. The mean value $\mu\left(x_t, t\right)$ needs to be learned and depends on Gaussian noise. For this, DDPM adopts a UNet model f_θ to predict the noise ϵ. In this work, we employ the multilevel motion patterns at the i-th time step Motions^i, as a condition to help the UNet to predict the noise. Hence, the training loss function of the denoising process is as follows:

$$L(\theta) = \mathbb{E}_{\mathbf{x}_0, t, \epsilon} \left\| \epsilon - f_\theta\left(x_t, t, \text{Motions}^i\right) \right\|^2, \quad [10]$$

$$x_t = \sqrt{\overline{\alpha}_t} x_0 + \sqrt{1-\overline{\alpha}_t}\,\epsilon. \quad [11]$$

Training loss. We employ a predicted loss, namely, mean absolute error loss, to train the satellite predictor. We use a diffusion loss to train the temporal diffusion part. By combining the two loss terms, we obtain the training loss of the satellite nowcasting module as follows:

$$L\left(\widehat{Y}, Y\right) = \sum_{i=1}^{k} \left(\left| Y_i - \widehat{Y}_i \right| + \lambda * Diff\left(Y_i - \widehat{Y}_i\right) \right). \quad [12]$$

The coefficient λ is utilized to balance the two loss terms. $Diff(.)$ is implemented by optimizing formulae (10) and (11), where the initial state $x_0 = Y_i - \widehat{Y}_i$. The forward training process and the backward testing process of DDMS are summarized as Algorithm 1 and Algorithm 2, respectively.

Algorithm 1: The training procedure of DDMS

Input: I-frame historical sequence $X = \left\{x_1, x_2, \ldots, x_I\right\}$; k-frame future sequence $Y = \left\{x_{I+1}, x_{I+2}, \ldots, x_{I+k}\right\}$

Output: The optimal parameters θ of DDMS

Setting: Initialize parameters θ of DDMS; initialize the predefined covariance hyperparameter α; set sample step T; set learning rate l and weight coefficient λ; Assume P, M, and D represent Satellite Predictor, Motion Encoder, and Temporal Diffusion, respectively

while not coverage **do**

Random add-noise step $t \sim \mathcal{U}(0, 1, 2, \ldots, T)$

The initial training loss $L = 0$

foreach $i = 1, 2, \ldots, k$ **do**

$\epsilon \sim \mathcal{N}(0, \mathbf{I})$, $\widehat{Y}_i = P\left(\widehat{Y}_{i-1}, X\right)$, $x_0 = Y_i - \widehat{Y}_i$,

$x_t = \sqrt{\overline{\alpha}_t} x_0 + \sqrt{1-\overline{\alpha}_t}\,\epsilon$,

$L = L + \left| Y_i - \widehat{Y}_i \right| + \lambda \times \left\| \epsilon - f_\theta\left(\mathbf{x}_t, t, \text{Motions}^i\right) \right\|^2$.

end

Update parameters θ of DDMS:

$\theta = \theta - l \times \dfrac{\partial L}{\partial \theta}$.

end

Algorithm 2: The test procedure of DDMS

Input: I-frame historical sequence $X = \left\{x_1, x_2, \ldots, x_I\right\}$; the denoise step d

Output: The k-frame predicted sequence $F = \left\{F_1, F_2, \ldots, F_k\right\}$

foreach $i = 1, 2, \ldots, k$ **do**

$\widehat{Y}_i = P\left(\widehat{Y}_{i-1}, X\right)$,

$x_N \sim \mathcal{N}(0, \mathbf{I})$,

foreach $(j, j-1) \in \left\{ \left(T, T-\frac{T}{d}\right), \left(T-\frac{T}{d}, T-2\times\frac{T}{d}\right), \ldots, \left(\frac{T}{d}+1, 1\right) \right\}$ **do**

$\epsilon_j = f_\theta\left(x_j, j, \text{Motions}^i\right)$,

$$x_{j-1} = \sqrt{\overline{\alpha}_{j-1}} \left(\frac{x_j - \sqrt{1-\overline{\alpha}_j}\,\epsilon_j}{\sqrt{\overline{\alpha}_j}} \right) + \sqrt{1-\overline{\alpha}_{j-1}}\,\epsilon_j.$$

end

$F_i = \widehat{Y}_i + x_1$.

end

Convection Detection Module. Traditional convection detection on satellite images usually relies on a specific threshold value to judge convective clouds, in which the threshold value is obtained according to meteorologists' experiential judgment. The threshold detection approach is simple but not very robust, and its accuracy is also a main concern. To automatically detect the convective clouds in the predicted satellite sequence, our team and experts in the National Satellite Meteorological Center manually label a convection dataset. Specifically, we label the convective clouds by combining four principles, namely, the basic characteristics of convective clouds summarized by experts, satellite images in visible channels,

Downloaded from https://www.pnas.org by SUN YAT-SEN UNIVERSITY on December 16, 2025 from IP address 202.116.81.14.

the brightness temperature of satellite data, and corresponding radar maps. The detailed label principles are described in the appendix. Then, we utilize the convection dataset to train a detection model [2D-UNet (42)]. Finally, the convection nowcasting results are obtained by segmenting each frame of the predicted satellite sequence produced by the satellite nowcasting module with the pretrained detection model.

Evaluation Metrics. For quantitative evaluation, we utilize the widely adopted metrics in weather nowcasting, the critical success index at different spatial scales: CSI-1, CSI-2, and CSI-4, to evaluate the convection nowcasting results of 4-km, 8-km, and 16-km resolutions, respectively. The CSI scores denote the overall evaluation of the hit rate and false alarm for convection nowcasting. The CSI-1 is calculated from the pixel-wise images, while the CSI-2 and CSI-4 are computed from the average downsampled images with a ratio of 2 and 4, respectively. The CSI score is formally defined as follows:

$$CSI = \frac{TP}{TP + FN + FP}. \quad [\mathbf{13}]$$

Through the convection detection module, the predicted satellite sequences $\hat{Y}_{final}$ are binarized to the convection sequences $\hat{C}$. Then, we can obtain the true positives (TP, prediction = 1, target = 1), false positives (FP, prediction = 1, target = 0), and false negatives (FN, prediction = 0, target = 1), to calculate the CSI-1 score as the formula (13). By downsampling the convection results, we can obtain the CSI-2 and CSI-4 scores in a similar manner.

Implementation Details. Our model DDMS is trained on a GPU server with a CPU of Intel(R) Xeon(R) Gold 6130 CPU @ 2.10 GHz, 256G memory, and 8 RTX A6000 cards (48G memory). We utilize the Adam optimizer (43) to train the model and use the exponential moving average (EMA) strategy (44) with a decay weight of 0.99 to update the parameters. The batch size and learning rate are set to 8 and 5e-5, respectively. The weight λ in the combined training loss is 10. The dimensions of hidden states in the four-layer GRU are set to 64, 128, 192, and 256, respectively. As for the diffusion part, the forwarding step is set to 1,000, while the denoising step is set to 200 with a DDIM (45) sampling manner. The details and analysis of our model are shown in the supplementary material.

Data, Materials, and Software Availability. In this work, we utilize pytorch (https://pytorch.org/) (46), a widely used deep learning framework, to train our model. We use Python (https://www.python.org/) (47) to complete the data process and results evaluation. In particular, we use the h5py to load the FengYun-4A HDF files and employ opencv-python to read and save the processed satellite images. The quantitative metric CSI is calculated on the Python library Numpy. Besides, we utilize the PySTEPS (https://pysteps.github.io/) (48), PredRNN-v2 (https://github.com/thuml/predrnn-pytorch) (49), and NowcastNet (https://codeocean.com/capsule/3935105/tree/v1) (50) as baselines to achieve convection nowcasting. The source codes of DDMS and its pretrained weight are in (https://github.com/Applied-IAS/DDMS) (51). The FengYun-4A AGRI-4 km-L1 satellite data can be freely downloaded from (http://data.nsmc.org.cn/portalsite/default.aspx) (52). The labeled convection dataset in this study is not publicly available at this time because the nowcasting system has been deployed operationally, which may involve potential commercial conflicts of interest. The trained convection detection model weights derived from this dataset are in (https://github.com/Applied-IAS/DDMS) (51).

ACKNOWLEDGMENTS. This work was supported by NSFC under Grants 62376072, 62272130, and Shenzhen Science and Technology Program under Grant JCYJ20200109113014456 and Grant KCXFZ20240903093006009, Guangdong Basic and Applied Basic Research Foundation (2023A1515110811, J.F.), and FengYun Application Pioneering Project under Grant FY-APP-ZX-2022.0220.

1. N. Dotzek, P. Groenemeijer, B. Feuerstein, A. M. Holzer, Overview of ESSL's severe convective storms research using the European Severe Weather Database ESWD. *Atmos. Res.* **93**, 575–586 (2009).
2. C. Melhauser, F. Zhang, Practical and intrinsic predictability of severe and convective weather at the mesoscales. *J. Atmos. Sci.* **69**, 3350–3371 (2012).
3. M. K. Tippett, J. T. Allen, V. A. Gensini, H. E. Brooks, Climate and hazardous convective weather. *Curr. Climate Change Rep.* **1**, 60–73 (2015).
4. J. Castle, D. Hendry, O. Kitov, *Forecasting and Nowcasting Macroeconomic Variables: A Methodological Overview* (Press, Eurostat, 2017).
5. J. W. Wilson, Y. Feng, M. Chen, R. D. Roberts, Nowcasting challenges during the Beijing Olympics: Successes, failures, and implications for future nowcasting systems. *Weather Forecast.* **25**, 1691–1714 (2010).
6. J. Done, C. A. Davis, M. Weisman, The next generation of NWP: Explicit forecasts of convection using the Weather Research and Forecasting (WRF) model. *Atmos. Sci. Lett.* **5**, 110–117 (2004).
7. P. Bauer, A. Thorpe, G. Brunet, The quiet revolution of numerical weather prediction. *Nature* **525**, 47–55 (2015).
8. S. Ravuri *et al.*, Skilful precipitation nowcasting using deep generative models of radar. *Nature* **597**, 672–677 (2021).
9. J. Sun *et al.*, Use of NWP for nowcasting convective precipitation: Recent progress and challenges. *Bull. Am. Meteorol. Soc.* **95**, 409–426 (2014).
10. A. J. Clark, E. D. Loken, Machine learning–derived severe weather probabilities from a warn-on-forecast system. *Weather Forecast.* **37**, 1721–1740 (2022).
11. P. L. Heinselman *et al.*, Warn-on-forecast system: From vision to reality. *Weather Forecast.* **39**, 75–95 (2024).
12. N. E. Bowler, C. E. Pierce, A. W. Seed, STEPS: A probabilistic precipitation forecasting scheme which merges an extrapolation nowcast with downscaled NWP. *Q. J. R. Meteorol. Soc.* **132**, 2127–2155 (2006).
13. S. Pulkkinen *et al.*, Pysteps: An open-source Python library for probabilistic precipitation nowcasting (v1. 0). *Geosci. Model. Dev.* **12**, 4185–4219 (2019).
14. K. Dai *et al.*, MSTCGAN: Multiscale time conditional generative adversarial network for long-term satellite image sequence prediction. *IEEE Trans. Geosci. Remote Sens.* **60**, 1–16 (2022).
15. Y. Zhang *et al.*, Skilful nowcasting of extreme precipitation with NowcastNet. *Nature* **619**, 526–532 (2023).
16. L. Han, J. Sun, W. Zhang, Convolutional neural network for convective storm nowcasting using 3-d Doppler weather radar data. *IEEE Trans. Geosci. Remote Sens.* **58**, 1487–1495 (2019).
17. I. Goodfellow *et al.*, "Generative adversarial nets" in *Proceedings of the Advances in Neural Information Processing Systems*, Z. Ghahramani, M. Welling, C. Cortes, N. Lawrence, K. Q. Weinberger, Eds. (Neural Information Processing Systems Foundation, 2014), vol. 27.
18. J. M. Sieglaff *et al.*, Nowcasting convective storm initiation using satellite-based box-averaged cloud-top cooling and cloud-type trends. *J. Appl. Meteorol. Climatol.* **50**, 110–126 (2011).
19. K. Kober, A. Tafferner, Tracking and nowcasting of convective cells using remote sensing data from radar and satellite. *Meteorol. Z.* **1**, 75–84 (2009).
20. K. Bedka *et al.*, Objective satellite-based detection of overshooting tops using infrared window channel brightness temperature gradients. *J. Appl. Meteorol. Climatol.* **49**, 181–202 (2010).
21. Y. Ai *et al.*, Deep convective cloud characterizations from both broadband imager and hyperspectral infrared sounder measurements. *J. Geophys. Res. Atmos.* **122**, 1700–1712 (2017).
22. H. Takahashi, Z. J. Luo, Characterizing tropical overshooting deep convection from joint analysis of CloudSat and geostationary satellite observations. *J. Geophys. Res. Atmos.* **119**, 112–121 (2014).
23. R. Lagerquist, J. Q. Stewart, I. Ebert-Uphoff, C. Kumler, Using deep learning to nowcast the spatial coverage of convection from Himawari-8 satellite data. *Mon. Weather Rev.* **149**, 3897–3921 (2021).
24. J. R. Mecikalski, D. Rosenfeld, A. Manzato, Evaluation of geostationary satellite observations and the development of a 1–2 h prediction model for future storm intensity. *J. Geophys. Res. Atmos.* **121**, 6374–6392 (2016).
25. J. R. Walker, W. M. MacKenzie Jr., J. R. Mecikalski, C. P. Jewett, An enhanced geostationary satellite–based convective initiation algorithm for 0–2-h nowcasting with object tracking. *J. Appl. Meteorol. Climatol.* **51**, 1931–1949 (2012).
26. J. R. Mecikalski, K. M. Bedka, Forecasting convective initiation by monitoring the evolution of moving cumulus in daytime GOES imagery. *Mon. Weather Rev.* **134**, 49–78 (2006).
27. D. Han *et al.*, A novel framework of detecting convective initiation combining automated sampling, machine learning, and repeated model tuning from geostationary satellite data. *Remote Sens.* **11**, 1454 (2019).
28. J. L. Cintineo *et al.*, A deep-learning model for automated detection of intense midlatitude convection using geostationary satellite images. *Weather Forecast.* **35**, 2567–2588 (2020).
29. S. Lee, H. Han, J. Im, E. Jang, M. I. Lee, Detection of deterministic and probabilistic convection initiation using Himawari-8 advanced Himawari imager data. *Atmos. Meas. Tech.* **10**, 1859–1874 (2017).
30. J. L. Cintineo, M. J. Pavolonis, J. M. Sieglaff, L. Cronce, J. Brunner, NOAA probsevere v2. 0–Probhail, probwind, and probtor. *Weather Forecast.* **35**, 1523–1543 (2020).
31. J. L. Cintineo, M. J. Pavolonis, J. M. Sieglaff, Probsevere version 3: Improved exploitation of data fusion and machine learning for nowcasting severe weather. *Weather Forecast.* **39**, 1937–1958 (2024).
32. Y. Li *et al.*, Convective storm VIL and lightning nowcasting using satellite and weather radar measurements based on multi-task learning models. *Adv. Atmos. Sci.* **40**, 887–899 (2023).
33. J. R. Mecikalski *et al.*, Probabilistic 0–1-h convective initiation nowcasts that combine geostationary satellite observations and numerical weather prediction model data. *J. Appl. Meteorol. Climatol.* **54**, 1039–1059 (2015).
34. J. Sohl-Dickstein, E. Weiss, N. Maheswaranathan, S. Ganguli, "Deep unsupervised learning using nonequilibrium thermodynamics" in *Proceedings of the International Conference on Machine Learning*, F. Bach, D. Blei, Eds. (Proceedings of Machine Learning Research, 2015), pp. 2256–2265.
35. J. Ho, A. Jain, P. Abbeel, "Denoising diffusion probabilistic models" in *Proceedings of the Advances in Neural Information Processing Systems*, H. Larochelle, M. Ranzato, R. Hadsell, M. F. Balcan, H. Lin, Eds. (Neural Information Processing Systems Foundation, 2020), vol. 33, pp. 6840–6851.
36. R. J. Chase, K. Haynes, L. V. Hoef, I. Ebert-Uphoff, Score-based diffusion nowcasting of GOES imagery. arXiv [Preprint] (2025). https://doi.org/10.48550/arXiv.2505.10432 (Accessed 15 September 2025).
37. D. Xian *et al.*, Fengyun meteorological satellite products for earth system science applications. *Adv. Atmos. Sci.* **38**, 1267–1284 (2021).
38. K. Trebing, T. StaÇ¹czyk, S. Mehrkanoon, SmaAt-UNet: Precipitation nowcasting using a small attention-unet architecture. *Pattern Recogn. Lett.* **145**, 178–186 (2021).
39. R. O. Imhoff, C. C. Brauer, A. Overeem, A. H. Weerts, R. Uijlenhoet, Spatial and temporal evaluation of radar rainfall nowcasting techniques on 1, 533 events. *Water Resour. Res.* **56**, e2019WR026723 (2020).
40. Y. Wang *et al.*, Predrnn: A recurrent neural network for spatiotemporal predictive learning. *IEEE Trans. Pattern Anal. Mach. Intell.* **45**, 2208–2225 (2022).

Downloaded from https://www.pnas.org by SUN YAT-SEN UNIVERSITY on December 16, 2025 from IP address 202.116.81.14.

41. N. Ballas, L. Yao, C. J. Pal, A. Courville, "Delving deeper into convolutional networks for learning video representations" in *Proceedings of the International Conference on Learning Representations*, Y. Bengio, Y. LeCun, Eds. (International Conference on Learning Representations, 2016).
42. O. Ronneberger, P. Fischer, T. Brox, "U-net: Convolutional networks for biomedical image segmentation" in *Proceedings of the Medical Image Computing and Computer-Assisted Intervention, Part III 18*, N. Navab, J. Hornegger, W. M. Wells, A. F. Frangi, Eds. (Springer, 2015), pp. 234–241.
43. D. P. Kingma, J. Ba, "Adam: A method for stochastic optimization" in *Proceedings of the International Conference on Learning Representations*, Y. Bengio, Y. LeCun, Eds. (International Conference on Learning Representations, 2015).
44. A. Tarvainen, H. Valpola, "Mean teachers are better role models: Weight-averaged consistency targets improve semi-supervised deep learning results" in *Proceedings of the Advances in Neural Information Processing Systems*, I. Guyon *et al*., Eds. (Neural Information Processing Systems Foundation, 2017), vol. 30, pp. 1195–1204.
45. J. Song, C. Meng, S. Ermon, "Denoising diffusion implicit models" in *Proceedings of the International Conference on Learning Representations*, A. Rush, S. Mohamed, D. Song, K. Cho, M. White, Eds. (International Conference on Learning Representations, 2020).
46. Meta AI Research. PyTorch. https://pytorch.org/. Accessed 1 March 2021.
47. Python Software Foundation. Python. https://www.python.org/. Accessed 1 March 2021.
48. S. D. Pulkkinen *et al*., pySTEPS: the nowcasting initiative. GitHub. https://pysteps.github.io/. Accessed 14 May 2021.
49. Y. Wang *et al*., PredRNN: A recurrent neural network for spatiotemporal predictive learning. GitHub. https://github.com/thuml/predrnn-pytorch. Accessed 4 August 2022.
50. Y. Zhang *et al*., Skillful nowcasting of extreme precipitation with NowcastNet. CodeOcean. https://codeocean.com/capsule/3935105/tree/v1. Accessed 23 July 2023.
51. K. Dai *et al*., DDMS: Four-hour thunderstorm nowcasting using a deep diffusion model. GitHub. https://github.com/Applied-IAS/DDMS. Deposited 9 November 2025.
52. National Satellite Meteorological Center, FENGYUN Satellite Data Service. http://data.nsmc.org.cn/DataPortal/en/home/index.html. Accessed 3 January 2024.

Downloaded from https://www.pnas.org by SUN YAT-SEN UNIVERSITY on December 16, 2025 from IP address 202.116.81.14.