# DDR2 SDRAM

## MT47H256M4 – 32 Meg x 4 x 8 banks
## MT47H128M8 – 16 Meg x 8 x 8 banks
## MT47H64M16 – 8 Meg x 16 x 8 banks

## Features

- $V_{DD}$ = 1.8V ±0.1V, $V_{DDQ}$ = 1.8V ±0.1V
- JEDEC-standard 1.8V I/O (SSTL_18-compatible)
- Differential data strobe (DQS, DQS#) option
- 4*n*-bit prefetch architecture
- Duplicate output strobe (RDQS) option for x8
- DLL to align DQ and DQS transitions with CK
- 8 internal banks for concurrent operation
- Programmable CAS latency (CL)
- Posted CAS additive latency (AL)
- WRITE latency = READ latency - 1 $^{t}$CK
- Selectable burst lengths (BL): 4 or 8
- Adjustable data-output drive strength
- 64ms, 8192-cycle refresh
- On-die termination (ODT)
- Industrial temperature (IT) option
- Automotive temperature (AT) option
- RoHS-compliant
- Supports JEDEC clock jitter specification

| Options[1] | Marking |
|---|---|
| • Configuration | |
| – 256 Meg x 4 (32 Meg x 4 x 8 banks) | 256M4 |
| – 128 Meg x 8 (16 Meg x 8 x 8 banks) | 128M8 |
| – 64 Meg x 16 (8 Meg x 16 x 8 banks) | 64M16 |
| • FBGA package (Pb-free) – x16 | |
| – 84-ball FBGA (8mm x 12.5mm) Die Rev :H | HR |
| – 84-ball FBGA (8mm x 12.5mm) Die Rev :M | NF |
| • FBGA package (Pb-free) – x4, x8 | |
| – 60-ball FBGA (8mm x 10mm) Die Rev :H | CF |
| – 60-ball FBGA (8mm x 10mm) Die Rev :M | SH |
| • FBGA package (lead solder) – x16 | |
| – 84-ball FBGA (8mm x 12.5mm) Die Rev :H | HW |
| • FBGA package (lead solder) – x4, x8 | |
| – 60-ball FBGA (8mm x 10mm) Die Rev :H | JN |
| • Timing – cycle time | |
| – 1.875ns @ CL = 7 (DDR2-1066) | -187E |
| – 2.5ns @ CL = 5 (DDR2-800) | -25E |
| – 3.0ns @ CL = 5 (DDR2-667) | -3 |
| • Self refresh | |
| – Standard | None |
| – Low-power | L |
| • Operating temperature | |
| – Commercial (0°C ≤ $T_C$ ≤ +85°C)[2] | None |
| – Industrial (–40°C ≤ $T_C$ ≤ +95°C; –40°C ≤ $T_A$ ≤ +85°C) | IT |
| • Revision | :H / :M |

Notes:
1. Not all options listed can be combined to define an offered product. Use the Part Catalog Search on www.micron.com for product offerings and availability.
2. For extended CT operating temperature see IDD Table 11 (page 32) Note 7.


Micron Technology, Inc. reserves the right to change products or specifications without notice.
© 2007 Micron Technology, Inc. All rights reserved.
Products and specifications discussed herein are subject to change by Micron without notice.

**Table 1: Key Timing Parameters**

| Speed Grade | Data Rate (MT/s) | | | | | $^{t}$RC (ns) |
|---|---|---|---|---|---|---|
| | CL = 3 | CL = 4 | CL = 5 | CL = 6 | CL = 7 | |
| -187E | 400 | 533 | 800 | 800 | 1066 | 54 |
| -25E | 400 | 533 | 800 | 800 | n/a | 55 |
| -3 | 400 | 533 | 667 | n/a | n/a | 55 |

**Table 2: Addressing**

| Parameter | 256 Meg x 4 | 128 Meg x 8 | 64 Meg x 16 |
|---|---|---|---|
| Configuration | 32 Meg x 4 x 8 banks | 16 Meg x 8 x 8 banks | 8 Meg x 16 x 8 banks |
| Refresh count | 8K | 8K | 8K |
| Row address | A[13:0] (16K) | A[13:0] (16K) | A[12:0] (8K) |
| Bank address | BA[2:0] (8) | BA[2:0] (8) | BA[2:0] (8) |
| Column address | A[11, 9:0] (2K) | A[9:0] (1K) | A[9:0] (1K) |

**Figure 1: 1Gb DDR2 Part Numbers**

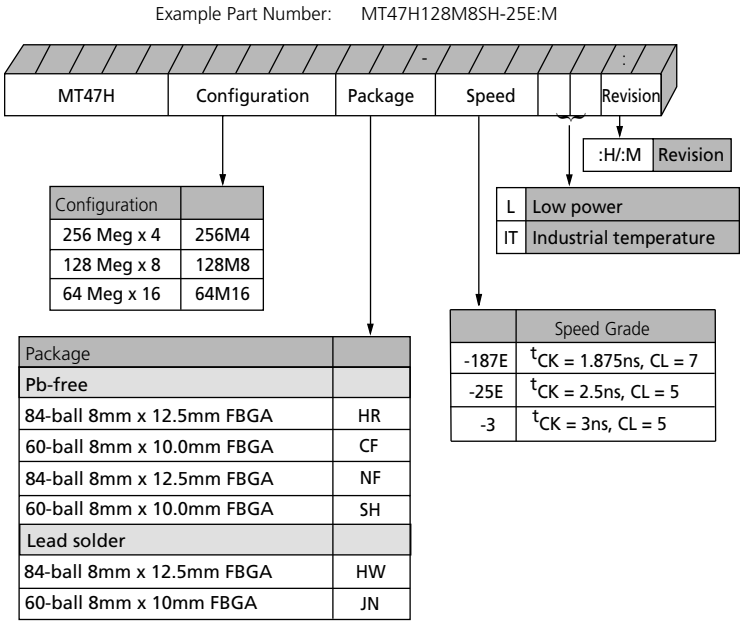


Note: 1. Not all speeds and configurations are available in all packages.

## FBGA Part Number System

Due to space limitations, FBGA-packaged components have an abbreviated part marking that is different from the part number. For a quick conversion of an FBGA code, see the FBGA Part Marking Decoder on Micron's Web site: http://www.micron.com.


Micron Technology, Inc. reserves the right to change products or specifications without notice.
© 2007 Micron Technology, Inc. All rights reserved.

# Contents

Important Notes and Warnings ..... 8
State Diagram ..... 9
Functional Description ..... 10
  Industrial Temperature ..... 10
  General Notes ..... 11
Functional Block Diagrams ..... 12
Ball Assignments and Descriptions ..... 15
Packaging ..... 19
  Package Dimensions ..... 19
  FBGA Package Capacitance ..... 23
Electrical Specifications – Absolute Ratings ..... 24
  Temperature and Thermal Impedance ..... 24
Electrical Specifications – $I_{DD}$ Parameters ..... 28
  $I_{DD}$ Specifications and Conditions ..... 28
  $I_{DD7}$ Conditions ..... 28
AC Timing Operating Specifications ..... 34
AC and DC Operating Conditions ..... 46
ODT DC Electrical Characteristics ..... 47
Input Electrical Characteristics and Operating Conditions ..... 48
Output Electrical Characteristics and Operating Conditions ..... 51
Output Driver Characteristics ..... 53
Power and Ground Clamp Characteristics ..... 57
AC Overshoot/Undershoot Specification ..... 58
Input Slew Rate Derating ..... 60
Commands ..... 74
  Truth Tables ..... 74
  DESELECT ..... 78
  NO OPERATION (NOP) ..... 79
  LOAD MODE (LM) ..... 79
  ACTIVATE ..... 79
  READ ..... 79
  WRITE ..... 79
  PRECHARGE ..... 80
  REFRESH ..... 80
  SELF REFRESH ..... 80
Mode Register (MR) ..... 81
  Burst Length ..... 81
  Burst Type ..... 83
  Operating Mode ..... 83
  DLL RESET ..... 83
  Write Recovery ..... 83
  Power-Down Mode ..... 84
  CAS Latency (CL) ..... 84
Extended Mode Register (EMR) ..... 86
  DLL Enable/Disable ..... 87
  Output Drive Strength ..... 87
  DQS# Enable/Disable ..... 87
  RDQS Enable/Disable ..... 87
  Output Enable/Disable ..... 87
  On-Die Termination (ODT) ..... 88


Micron Technology, Inc. reserves the right to change products or specifications without notice.
© 2007 Micron Technology, Inc. All rights reserved.

Off-Chip Driver (OCD) Impedance Calibration ..... 88
Posted CAS Additive Latency (AL) ..... 88
Extended Mode Register 2 (EMR2) ..... 90
Extended Mode Register 3 (EMR3) ..... 91
Initialization ..... 92
ACTIVATE ..... 95
READ ..... 97
READ with Precharge ..... 101
READ with Auto Precharge ..... 103
WRITE ..... 109
PRECHARGE ..... 120
REFRESH ..... 121
SELF REFRESH ..... 122
Power-Down Mode ..... 124
Precharge Power-Down Clock Frequency Change ..... 131
Reset ..... 132
CKE Low Anytime ..... 132
ODT Timing ..... 134
MRS Command to ODT Update Delay ..... 136


Micron Technology, Inc. reserves the right to change products or specifications without notice.
© 2007 Micron Technology, Inc. All rights reserved.

## List of Figures

Figure 1: 1Gb DDR2 Part Numbers ... 2
Figure 2: Simplified State Diagram ... 9
Figure 3: 256 Meg x 4 Functional Block Diagram ... 12
Figure 4: 128 Meg x 8 Functional Block Diagram ... 13
Figure 5: 64 Meg x 16 Functional Block Diagram ... 14
Figure 6: 60-Ball FBGA – x4, x8 Ball Assignments (Top View) ... 15
Figure 7: 84-Ball FBGA – x16 Ball Assignments (Top View) ... 16
Figure 8: 84-Ball FBGA Package (8mm x 12.5mm) – x16 Die Rev :H ... 19
Figure 9: 60-Ball FBGA (8mm x 10mm) – x4, x8 Die Rev :H ... 20
Figure 10: 84-Ball FBGA Package (8mm x 12.5mm) – x16; "NF" Die Rev :M ... 21
Figure 11: 60-Ball FBGA (8mm x 10mm) – x4, x8; "SH" Die Rev :M ... 22
Figure 12: Example Temperature Test Point Location ... 26
Figure 13: Single-Ended Input Signal Levels ... 48
Figure 14: Differential Input Signal Levels ... 49
Figure 15: Differential Output Signal Levels ... 51
Figure 16: Output Slew Rate Load ... 52
Figure 17: Full Strength Pull-Down Characteristics ... 53
Figure 18: Full Strength Pull-Up Characteristics ... 54
Figure 19: Reduced Strength Pull-Down Characteristics ... 55
Figure 20: Reduced Strength Pull-Up Characteristics ... 56
Figure 21: Input Clamp Characteristics ... 57
Figure 22: Overshoot ... 58
Figure 23: Undershoot ... 58
Figure 24: Nominal Slew Rate for $^{t}$IS ... 63
Figure 25: Tangent Line for $^{t}$IS ... 63
Figure 26: Nominal Slew Rate for $^{t}$IH ... 64
Figure 27: Tangent Line for $^{t}$IH ... 64
Figure 28: Nominal Slew Rate for $^{t}$DS ... 70
Figure 29: Tangent Line for $^{t}$DS ... 70
Figure 30: Nominal Slew Rate for $^{t}$DH ... 71
Figure 31: Tangent Line for $^{t}$DH ... 71
Figure 32: AC Input Test Signal Waveform Command/Address Balls ... 72
Figure 33: AC Input Test Signal Waveform for Data with DQS, DQS# (Differential) ... 72
Figure 34: AC Input Test Signal Waveform for Data with DQS (Single-Ended) ... 73
Figure 35: AC Input Test Signal Waveform (Differential) ... 73
Figure 36: MR Definition ... 82
Figure 37: CL ... 85
Figure 38: EMR Definition ... 86
Figure 39: READ Latency ... 89
Figure 40: WRITE Latency ... 89
Figure 41: EMR2 Definition ... 90
Figure 42: EMR3 Definition ... 91
Figure 43: DDR2 Power-Up and Initialization ... 92
Figure 44: Example: Meeting $^{t}$RRD (MIN) and $^{t}$RCD (MIN) ... 95
Figure 45: Multibank Activate Restriction ... 96
Figure 46: READ Latency ... 98
Figure 47: Consecutive READ Bursts ... 99
Figure 48: Nonconsecutive READ Bursts ... 100
Figure 49: READ Interrupted by READ ... 101
Figure 50: READ-to-WRITE ... 101


Micron Technology, Inc. reserves the right to change products or specifications without notice.
© 2007 Micron Technology, Inc. All rights reserved.

Figure 51: READ-to-PRECHARGE – BL = 4 ..... 102
Figure 52: READ-to-PRECHARGE – BL = 8 ..... 102
Figure 53: Bank Read – Without Auto Precharge ..... 104
Figure 54: Bank Read – with Auto Precharge ..... 105
Figure 55: x4, x8 Data Output Timing – $^{t}$DQSQ, $^{t}$QH, and Data Valid Window ..... 106
Figure 56: x16 Data Output Timing – $^{t}$DQSQ, $^{t}$QH, and Data Valid Window ..... 107
Figure 57: Data Output Timing – $^{t}$AC and $^{t}$DQSCK ..... 108
Figure 58: Write Burst ..... 110
Figure 59: Consecutive WRITE-to-WRITE ..... 111
Figure 60: Nonconsecutive WRITE-to-WRITE ..... 111
Figure 61: WRITE Interrupted by WRITE ..... 113
Figure 62: WRITE-to-READ ..... 114
Figure 63: WRITE-to-PRECHARGE ..... 115
Figure 64: Bank Write – Without Auto Precharge ..... 116
Figure 65: Bank Write – with Auto Precharge ..... 117
Figure 66: WRITE – DM Operation ..... 118
Figure 67: Data Input Timing ..... 119
Figure 68: Refresh Mode ..... 121
Figure 69: Self Refresh ..... 123
Figure 70: Power-Down ..... 125
Figure 71: READ-to-Power-Down or Self Refresh Entry ..... 127
Figure 72: READ with Auto Precharge-to-Power-Down or Self Refresh Entry ..... 127
Figure 73: WRITE-to-Power-Down or Self Refresh Entry ..... 128
Figure 74: WRITE with Auto Precharge-to-Power-Down or Self Refresh Entry ..... 128
Figure 75: REFRESH Command-to-Power-Down Entry ..... 129
Figure 76: ACTIVATE Command-to-Power-Down Entry ..... 129
Figure 77: PRECHARGE Command-to-Power-Down Entry ..... 130
Figure 78: LOAD MODE Command-to-Power-Down Entry ..... 130
Figure 79: Input Clock Frequency Change During Precharge Power-Down Mode ..... 131
Figure 80: RESET Function ..... 133
Figure 81: ODT Timing for Entering and Exiting Power-Down Mode ..... 135
Figure 82: Timing for MRS Command to ODT Update Delay ..... 136
Figure 83: ODT Timing for Active or Fast-Exit Power-Down Mode ..... 137
Figure 84: ODT Timing for Slow-Exit or Precharge Power-Down Modes ..... 137
Figure 85: ODT Turn-Off Timings When Entering Power-Down Mode ..... 138
Figure 86: ODT Turn-On Timing When Entering Power-Down Mode ..... 139
Figure 87: ODT Turn-Off Timing When Exiting Power-Down Mode ..... 140
Figure 88: ODT Turn-On Timing When Exiting Power-Down Mode ..... 141


Micron Technology, Inc. reserves the right to change products or specifications without notice.
© 2007 Micron Technology, Inc. All rights reserved.

## List of Tables

Table 1: Key Timing Parameters ..... 2
Table 2: Addressing ..... 2
Table 3: FBGA 84-Ball – x16 and 60-Ball – x4, x8 Descriptions ..... 17
Table 4: Input Capacitance ..... 23
Table 5: Absolute Maximum DC Ratings ..... 24
Table 6: Temperature Limits ..... 25
Table 7: Thermal Impedance ..... 27
Table 8: General $I_{DD}$ Parameters ..... 28
Table 9: $I_{DD7}$ Timing Patterns (8-Bank Interleave READ Operation) ..... 28
Table 10: DDR2 $I_{DD}$ Specifications and Conditions (Die Revision H) ..... 30
Table 11: DDR2 $I_{DD}$ Specifications and Conditions (Die Revision M) ..... 32
Table 12: AC Operating Specifications and Conditions ..... 34
Table 13: Recommended DC Operating Conditions (SSTL_18) ..... 46
Table 14: ODT DC Electrical Characteristics ..... 47
Table 15: Input DC Logic Levels ..... 48
Table 16: Input AC Logic Levels ..... 48
Table 17: Differential Input Logic Levels ..... 49
Table 18: Differential AC Output Parameters ..... 51
Table 19: Output DC Current Drive ..... 51
Table 20: Output Characteristics ..... 52
Table 21: Full Strength Pull-Down Current (mA) ..... 53
Table 22: Full Strength Pull-Up Current (mA) ..... 54
Table 23: Reduced Strength Pull-Down Current (mA) ..... 55
Table 24: Reduced Strength Pull-Up Current (mA) ..... 56
Table 25: Input Clamp Characteristics ..... 57
Table 26: Address and Control Balls ..... 58
Table 27: Clock, Data, Strobe, and Mask Balls ..... 58
Table 28: AC Input Test Conditions ..... 59
Table 29: DDR2-400/533 Setup and Hold Time Derating Values ($^{t}IS$ and $^{t}IH$) ..... 61
Table 30: DDR2-667/800/1066 Setup and Hold Time Derating Values ($^{t}IS$ and $^{t}IH$) ..... 62
Table 31: DDR2-400/533 $^{t}DS$, $^{t}DH$ Derating Values with Differential Strobe ..... 65
Table 32: DDR2-667/800/1066 $^{t}DS$, $^{t}DH$ Derating Values with Differential Strobe ..... 67
Table 33: Single-Ended DQS Slew Rate Derating Values Using $^{t}DS_b$ and $^{t}DH_b$ ..... 68
Table 34: Single-Ended DQS Slew Rate Fully Derated (DQS, DQ at $V_{REF}$) at DDR2-667 ..... 68
Table 35: Single-Ended DQS Slew Rate Fully Derated (DQS, DQ at $V_{REF}$) at DDR2-533 ..... 69
Table 36: Single-Ended DQS Slew Rate Fully Derated (DQS, DQ at $V_{REF}$) at DDR2-400 ..... 69
Table 37: Truth Table – DDR2 Commands ..... 74
Table 38: Truth Table – Current State Bank *n* – Command to Bank *n* ..... 75
Table 39: Truth Table – Current State Bank *n* – Command to Bank *m* ..... 77
Table 40: Minimum Delay with Auto Precharge Enabled ..... 78
Table 41: Burst Definition ..... 83
Table 42: READ Using Concurrent Auto Precharge ..... 103
Table 43: WRITE Using Concurrent Auto Precharge ..... 110
Table 44: Truth Table – CKE ..... 126


Micron Technology, Inc. reserves the right to change products or specifications without notice.
© 2007 Micron Technology, Inc. All rights reserved.

# Important Notes and Warnings

Micron Technology, Inc. ("Micron") reserves the right to make changes to information published in this document, including without limitation specifications and product descriptions. This document supersedes and replaces all information supplied prior to the publication hereof. You may not rely on any information set forth in this document if you obtain the product described herein from any unauthorized distributor or other source not authorized by Micron.

**Automotive Applications.** Products are not designed or intended for use in automotive applications unless specifically designated by Micron as automotive-grade by their respective data sheets. Distributor and customer/distributor shall assume the sole risk and liability for and shall indemnify and hold Micron harmless against all claims, costs, damages, and expenses and reasonable attorneys' fees arising out of, directly or indirectly, any claim of product liability, personal injury, death, or property damage resulting directly or indirectly from any use of non-automotive-grade products in automotive applications. Customer/distributor shall ensure that the terms and conditions of sale between customer/distributor and any customer of distributor/customer (1) state that Micron products are not designed or intended for use in automotive applications unless specifically designated by Micron as automotive-grade by their respective data sheets and (2) require such customer of distributor/customer to indemnify and hold Micron harmless against all claims, costs, damages, and expenses and reasonable attorneys' fees arising out of, directly or indirectly, any claim of product liability, personal injury, death, or property damage resulting from any use of non-automotive-grade products in automotive applications.

**Critical Applications.** Products are not authorized for use in applications in which failure of the Micron component could result, directly or indirectly in death, personal injury, or severe property or environmental damage ("Critical Applications"). Customer must protect against death, personal injury, and severe property and environmental damage by incorporating safety design measures into customer's applications to ensure that failure of the Micron component will not result in such harms. Should customer or distributor purchase, use, or sell any Micron component for any critical application, customer and distributor shall indemnify and hold harmless Micron and its subsidiaries, subcontractors, and affiliates and the directors, officers, and employees of each against all claims, costs, damages, and expenses and reasonable attorneys' fees arising out of, directly or indirectly, any claim of product liability, personal injury, or death arising in any way out of such critical application, whether or not Micron or its subsidiaries, subcontractors, or affiliates were negligent in the design, manufacture, or warning of the Micron product.

**Customer Responsibility.** Customers are responsible for the design, manufacture, and operation of their systems, applications, and products using Micron products. ALL SEMICONDUCTOR PRODUCTS HAVE INHERENT FAILURE RATES AND LIMITED USEFUL LIVES. IT IS THE CUSTOMER'S SOLE RESPONSIBILITY TO DETERMINE WHETHER THE MICRON PRODUCT IS SUITABLE AND FIT FOR THE CUSTOMER'S SYSTEM, APPLICATION, OR PRODUCT. Customers must ensure that adequate design, manufacturing, and operating safeguards are included in customer's applications and products to eliminate the risk that personal injury, death, or severe property or environmental damages will result from failure of any semiconductor component.

**Limited Warranty.** In no event shall Micron be liable for any indirect, incidental, punitive, special or consequential damages (including without limitation lost profits, lost savings, business interruption, costs related to the removal or replacement of any products or rework charges) whether or not such damages are based on tort, warranty, breach of contract or other legal theory, unless explicitly stated in a written agreement executed by Micron's duly authorized representative.


Micron Technology, Inc. reserves the right to change products or specifications without notice.
© 2007 Micron Technology, Inc. All rights reserved.

# State Diagram

**Figure 2: Simplified State Diagram**

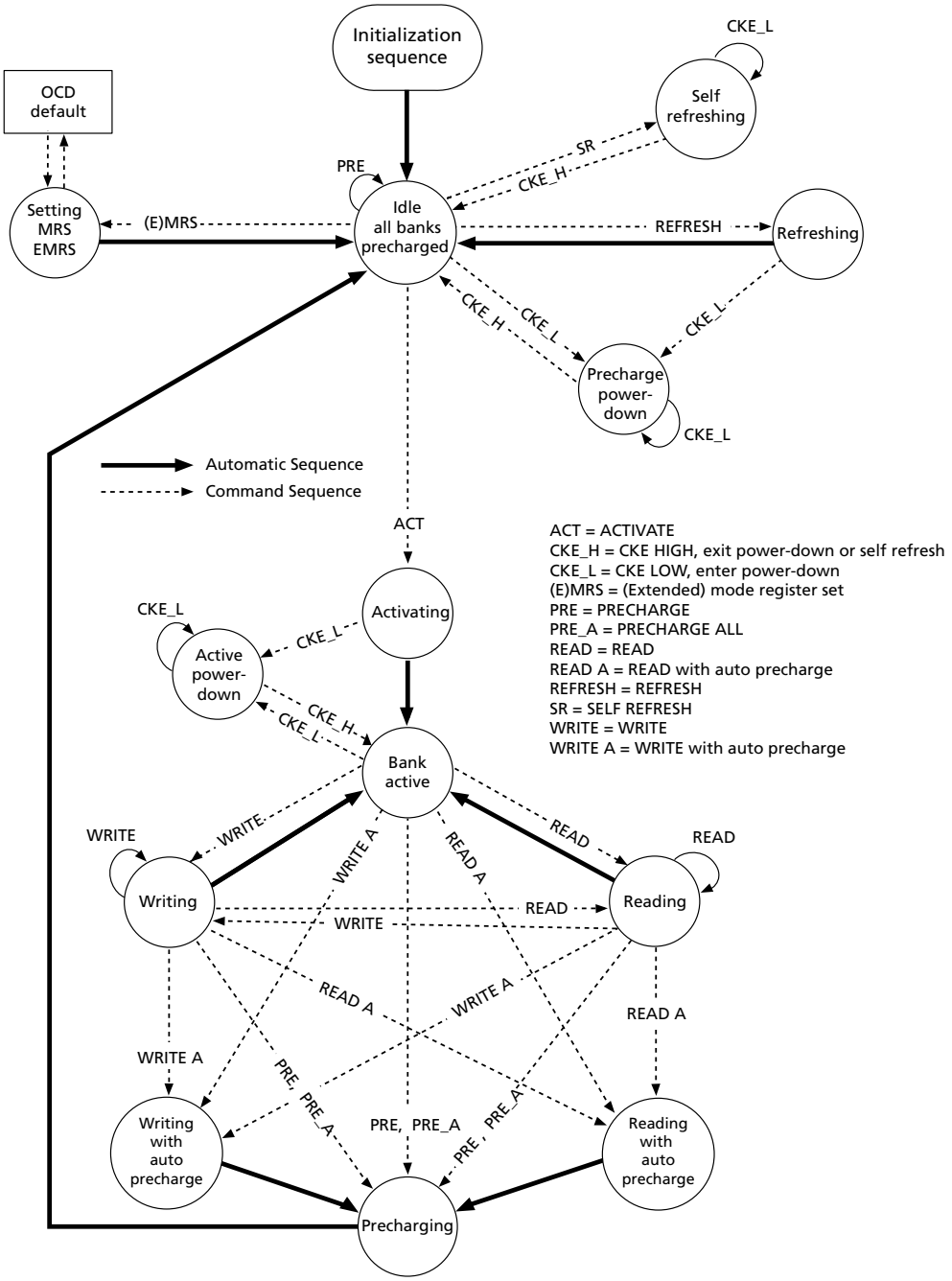


Note: 1. This diagram provides the basic command flow. It is not comprehensive and does not identify all timing requirements or possible command restrictions such as multibank interaction, power down, entry/exit, etc.


Micron Technology, Inc. reserves the right to change products or specifications without notice.
© 2007 Micron Technology, Inc. All rights reserved.

# Functional Description

The DDR2 SDRAM uses a double data rate architecture to achieve high-speed operation. The double data rate architecture is essentially a 4*n*-prefetch architecture, with an interface designed to transfer two data words per clock cycle at the I/O balls. A single READ or WRITE operation for the DDR2 SDRAM effectively consists of a single 4*n*-bit-wide, two-clock-cycle data transfer at the internal DRAM core and four corresponding *n*-bit-wide, one-half-clock-cycle data transfers at the I/O balls.

A bidirectional data strobe (DQS, DQS#) is transmitted externally, along with data, for use in data capture at the receiver. DQS is a strobe transmitted by the DDR2 SDRAM during READs and by the memory controller during WRITEs. DQS is edge-aligned with data for READs and center-aligned with data for WRITEs. The x16 offering has two data strobes, one for the lower byte (LDQS, LDQS#) and one for the upper byte (UDQS, UDQS#).

The DDR2 SDRAM operates from a differential clock (CK and CK#); the crossing of CK going HIGH and CK# going LOW will be referred to as the positive edge of CK. Commands (address and control signals) are registered at every positive edge of CK. Input data is registered on both edges of DQS, and output data is referenced to both edges of DQS as well as to both edges of CK.

Read and write accesses to the DDR2 SDRAM are burst-oriented; accesses start at a selected location and continue for a programmed number of locations in a programmed sequence. Accesses begin with the registration of an ACTIVATE command, which is then followed by a READ or WRITE command. The address bits registered coincident with the ACTIVATE command are used to select the bank and row to be accessed. The address bits registered coincident with the READ or WRITE command are used to select the bank and the starting column location for the burst access.

The DDR2 SDRAM provides for programmable read or write burst lengths of four or eight locations. DDR2 SDRAM supports interrupting a burst read of eight with another read or a burst write of eight with another write. An auto precharge function may be enabled to provide a self-timed row precharge that is initiated at the end of the burst access.

As with standard DDR SDRAM, the pipelined, multibank architecture of DDR2 SDRAM enables concurrent operation, thereby providing high, effective bandwidth by hiding row precharge and activation time.

A self refresh mode is provided, along with a power-saving, power-down mode.

All inputs are compatible with the JEDEC standard for SSTL_18. All full drive-strength outputs are SSTL_18-compatible.

## Industrial Temperature

The industrial temperature (IT) option, if offered, has two simultaneous requirements: ambient temperature surrounding the device cannot be less than –40°C or greater than 85°C, and the case temperature cannot be less than –40°C or greater than 95°C. JEDEC specifications require the refresh rate to double when $T_C$ exceeds 85°C; this also requires use of the high-temperature self refresh option. Additionally, ODT resistance, input/output impedance and $I_{DD}$ values must be derated when $T_C$ is < 0°C or > 85°C.


Micron Technology, Inc. reserves the right to change products or specifications without notice.
© 2007 Micron Technology, Inc. All rights reserved.

## General Notes

- The functionality and the timing specifications discussed in this data sheet are for the DLL-enabled mode of operation.
- Throughout the data sheet, the various figures and text refer to DQs as "DQ." The DQ term is to be interpreted as any and all DQ collectively, unless specifically stated otherwise. Additionally, the x16 is divided into 2 bytes: the lower byte and the upper byte. For the lower byte (DQ[7:0]), DM refers to LDM and DQS refers to LDQS. For the upper byte (DQ[15:8]), DM refers to UDM and DQS refers to UDQS.
- A x16 device's DQ bus is comprised of two bytes. If only one of the bytes needs to be used, use the lower byte for data transfers and terminate the upper byte as noted:
  - Connect UDQS to ground via 1kΩ* resistor
  - Connect UDQS# to $V_{DD}$ via 1kΩ* resistor
  - Connect UDM to $V_{DD}$ via 1kΩ* resistor
  - Connect DQ[15:8] individually to either $V_{SS}$ or $V_{DD}$ via 1kΩ* resistors, or float DQ[15:8].

  *If ODT is used, 1kΩ resistor should be changed to 4x that of the selected ODT.
- Complete functionality is described throughout the document, and any page or diagram may have been simplified to convey a topic and may not be inclusive of all requirements.
- Any specific requirement takes precedence over a general statement.


Micron Technology, Inc. reserves the right to change products or specifications without notice.
© 2007 Micron Technology, Inc. All rights reserved.

# Functional Block Diagrams

The DDR2 SDRAM is a high-speed CMOS, dynamic random access memory. It is internally configured as a multibank DRAM.

**Figure 3: 256 Meg x 4 Functional Block Diagram**

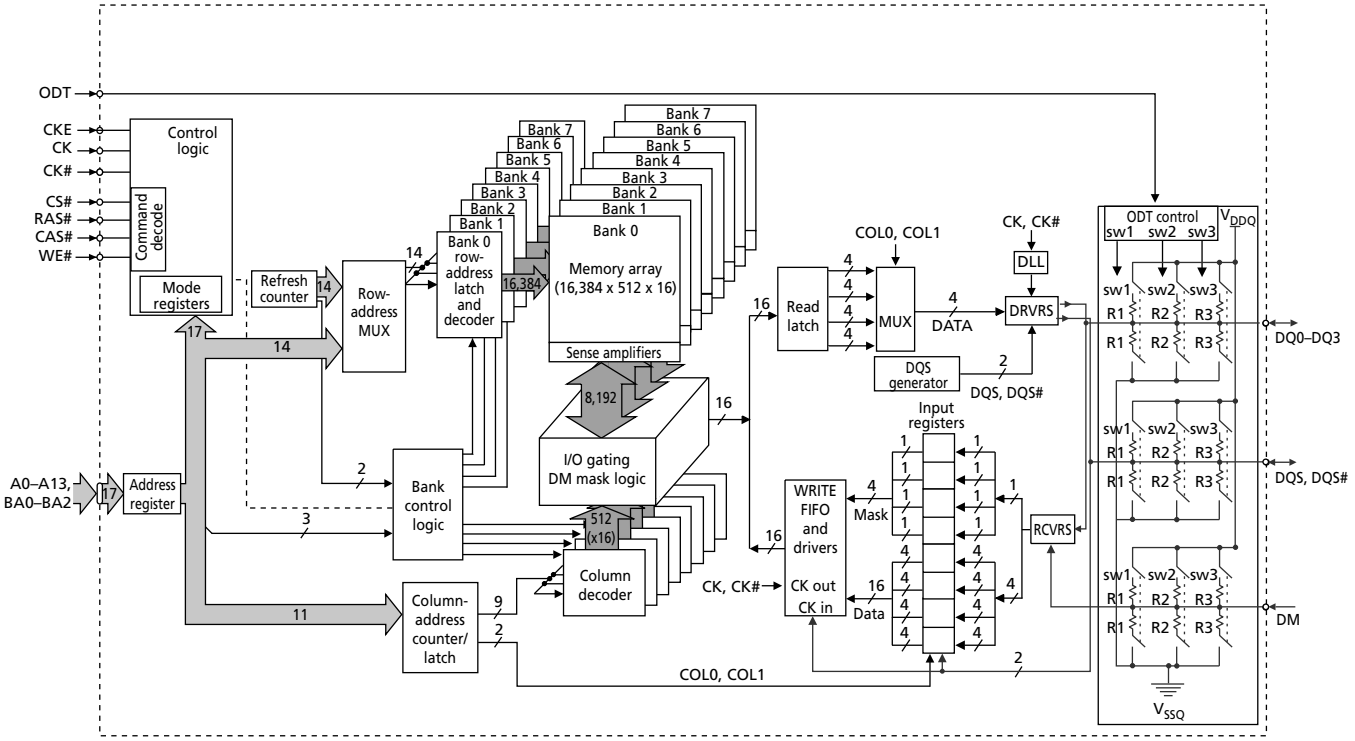



Micron Technology, Inc. reserves the right to change products or specifications without notice.
© 2007 Micron Technology, Inc. All rights reserved.

## Figure 4: 128 Meg x 8 Functional Block Diagram

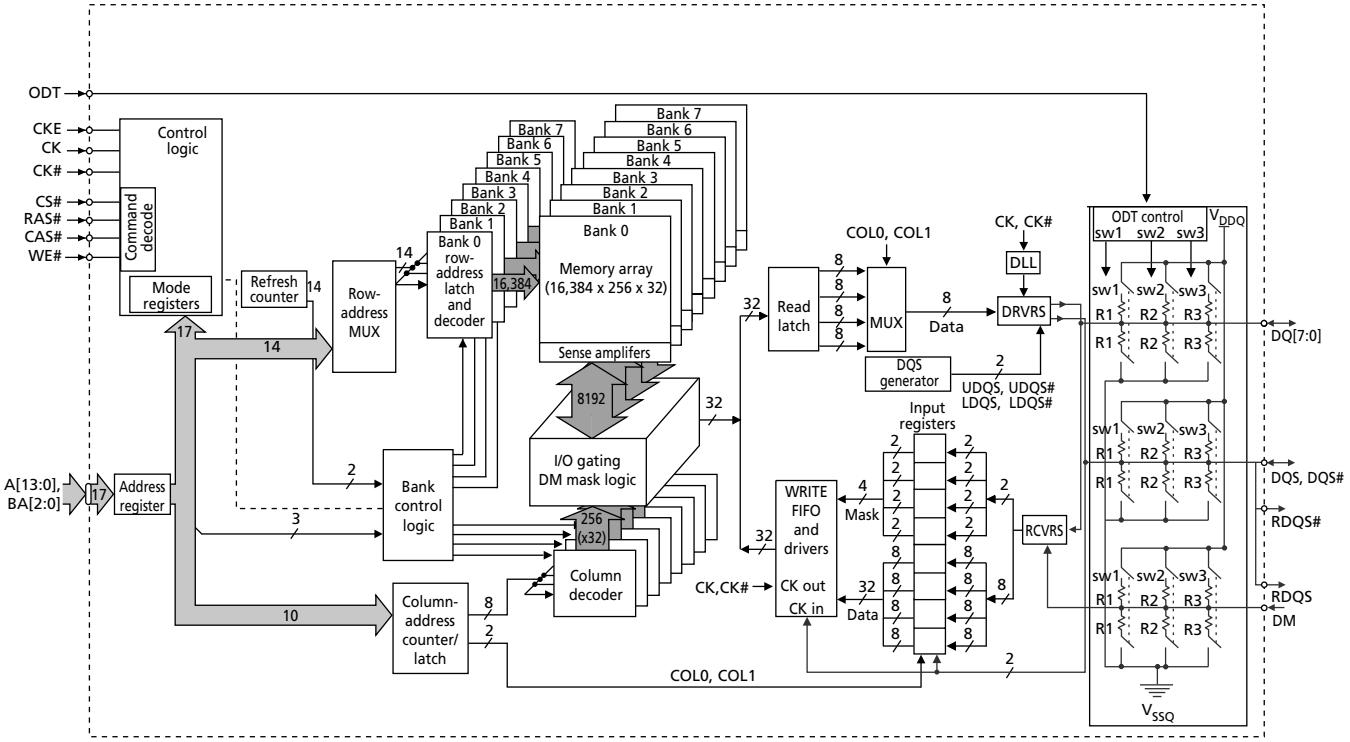



Micron Technology, Inc. reserves the right to change products or specifications without notice.
© 2007 Micron Technology, Inc. All rights reserved.

## Figure 5: 64 Meg x 16 Functional Block Diagram

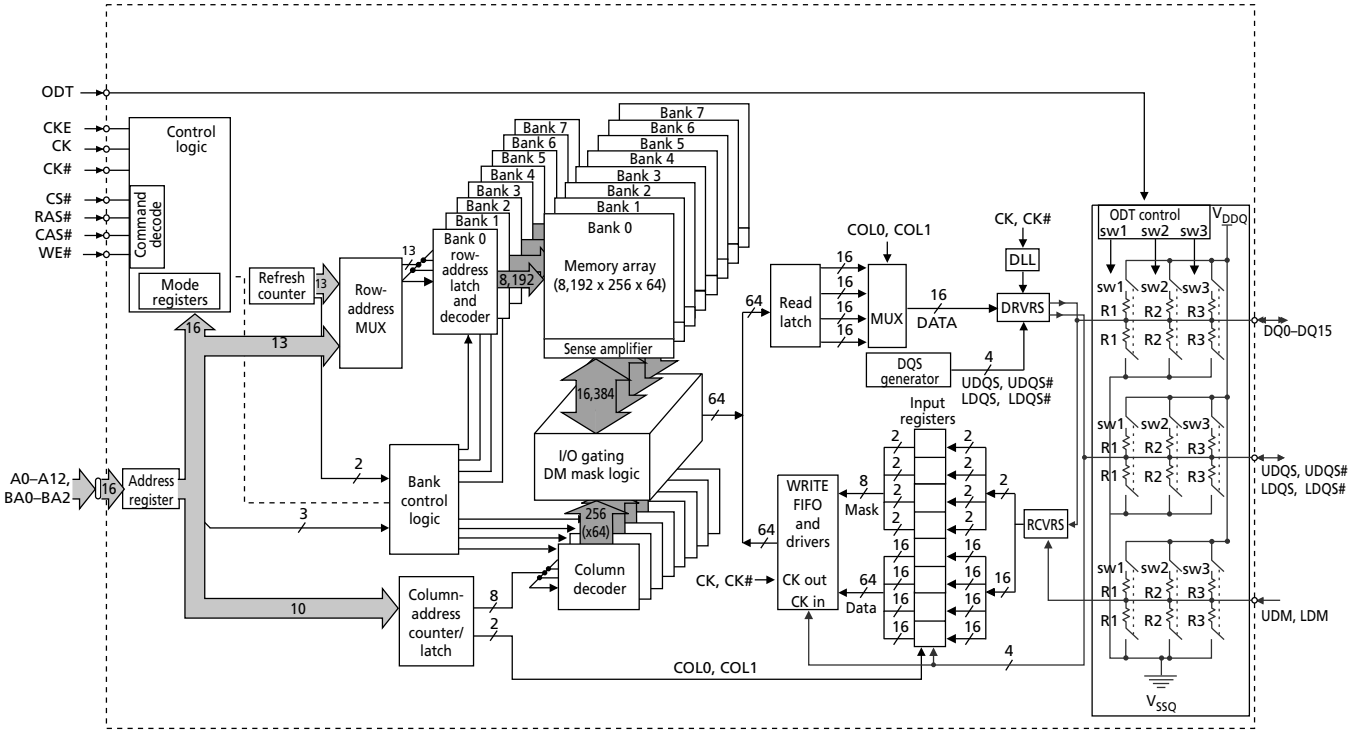



Micron Technology, Inc. reserves the right to change products or specifications without notice.
© 2007 Micron Technology, Inc. All rights reserved.

# Ball Assignments and Descriptions

**Figure 6: 60-Ball FBGA – x4, x8 Ball Assignments (Top View)**

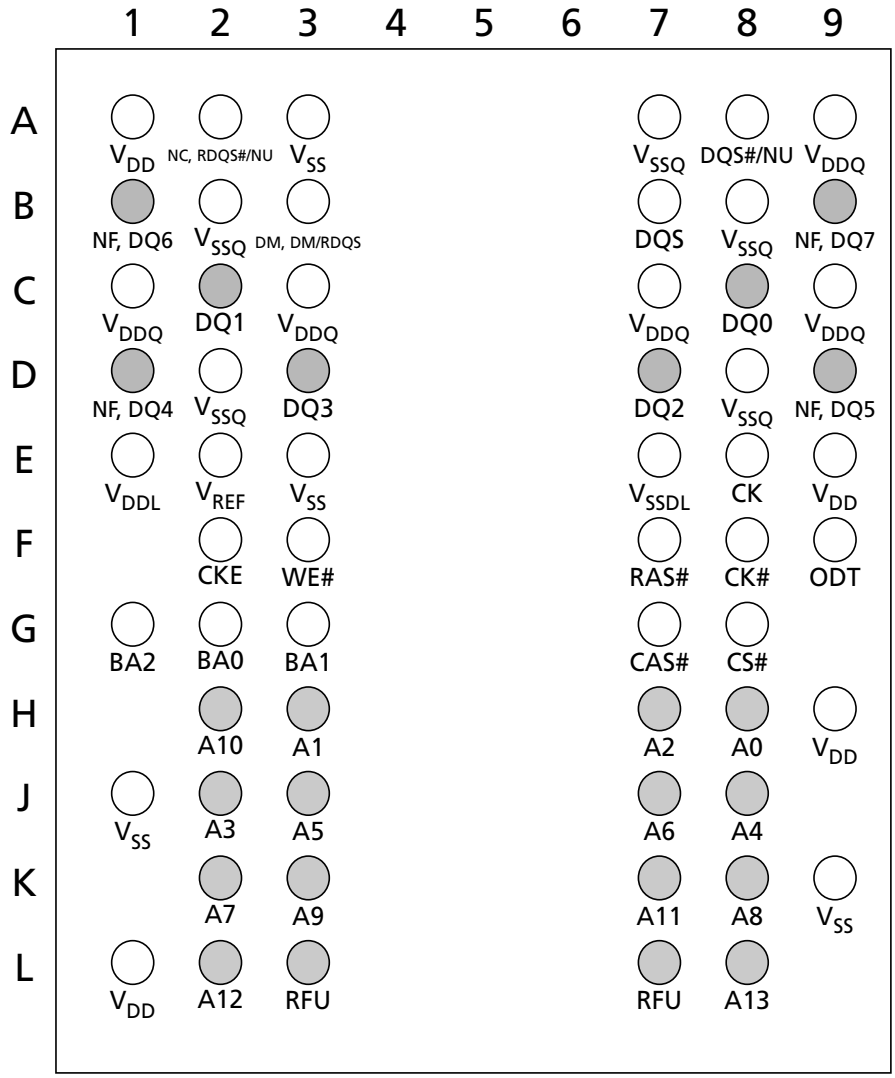



Micron Technology, Inc. reserves the right to change products or specifications without notice.
© 2007 Micron Technology, Inc. All rights reserved.

**Figure 7: 84-Ball FBGA – x16 Ball Assignments (Top View)**

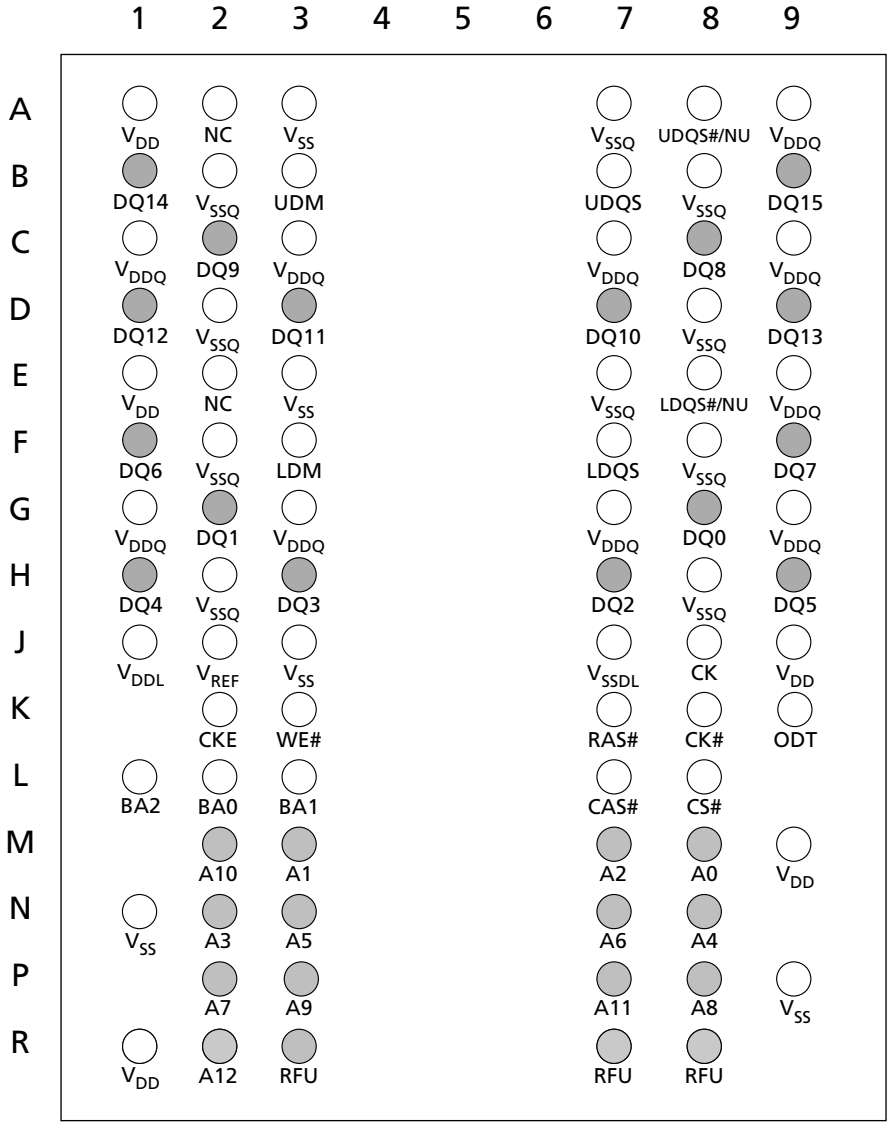



Micron Technology, Inc. reserves the right to change products or specifications without notice.
© 2007 Micron Technology, Inc. All rights reserved.

**Table 3: FBGA 84-Ball – x16 and 60-Ball – x4, x8 Descriptions**

| Symbol | Type | Description |
|---|---|---|
| A[12:0] (x16), A[13:0] (x4, x8) | Input | **Address inputs:** Provide the row address for ACTIVATE commands, and the column address and auto precharge bit (A10) for READ/WRITE commands, to select one location out of the memory array in the respective bank. A10 sampled during a PRECHARGE command determines whether the PRECHARGE applies to one bank (A10 LOW, bank selected by BA[2:0] or all banks (A10 HIGH). The address inputs also provide the op-code during a LOAD MODE command. |
| BA[2:0] | Input | **Bank address inputs:** BA[2:0] define to which bank an ACTIVATE, READ, WRITE, or PRECHARGE command is being applied. BA[2:0] define which mode register, including MR, EMR, EMR(2), and EMR(3), is loaded during the LOAD MODE command. |
| CK, CK# | Input | **Clock:** CK and CK# are differential clock inputs. All address and control input signals are sampled on the crossing of the positive edge of CK and negative edge of CK#. Output data (DQ and DQS/DQS#) is referenced to the crossings of CK and CK#. |
| CKE | Input | **Clock enable:** CKE (registered HIGH) activates and CKE (registered LOW) deactivates clocking circuitry on the DDR2 SDRAM. The specific circuitry that is enabled/disabled is dependent on the DDR2 SDRAM configuration and operating mode. CKE LOW provides precharge power-down and SELF REFRESH operations (all banks idle), or ACTIVATE power-down (row active in any bank). CKE is synchronous for power-down entry, power-down exit, output disable, and for self refresh entry. CKE is asynchronous for self refresh exit. Input buffers (excluding CK, CK#, CKE, and ODT) are disabled during power-down. Input buffers (excluding CKE) are disabled during self refresh. CKE is an SSTL_18 input but will detect a LVCMOS LOW level after $V_{DD}$ is applied during first power-up. After $V_{REF}$ has become stable during the power-on and initialization sequence, it must be maintained for proper operation of the CKE receiver. For proper SELF REFRESH operation, $V_{REF}$ must be maintained. |
| CS# | Input | **Chip select:** CS# enables (registered LOW) and disables (registered HIGH) the command decoder. All commands are masked when CS# is registered high. CS# provides for external bank selection on systems with multiple ranks. CS# is considered part of the command code. |
| LDM, UDM, DM | Input | **Input data mask:** DM is an input mask signal for write data. Input data is masked when DM is sampled HIGH along with that input data during a WRITE access. DM is sampled on both edges of DQS. Although DM balls are input-only, the DM loading is designed to match that of DQ and DQS balls. LDM is DM for lower byte DQ[7:0] and UDM is DM for upper byte DQ[15:8]. |
| ODT | Input | **On-die termination:** ODT (registered HIGH) enables termination resistance internal to the DDR2 SDRAM. When enabled, ODT is only applied to each of the following balls: DQ[15:0], LDM, UDM, LDQS, LDQS#, UDQS, and UDQS# for the x16; DQ[7:0], DQS, DQS#, RDQS, RDQS#, and DM for the x8; DQ[3:0], DQS, DQS#, and DM for the x4. The ODT input will be ignored if disabled via the LOAD MODE command. |
| RAS#, CAS#, WE# | Input | **Command inputs**: RAS#, CAS#, and WE# (along with CS#) define the command being entered. |
| DQ[15:0] (x16)<br>DQ[3:0] (x4)<br>DQ[7:0] (x8) | I/O | **Data input/output:** Bidirectional data bus for 64 Meg x 16.<br>Bidirectional data bus for 256 Meg x 4.<br>Bidirectional data bus for 128 Meg x 8. |


Micron Technology, Inc. reserves the right to change products or specifications without notice.
© 2007 Micron Technology, Inc. All rights reserved.

**Table 3: FBGA 84-Ball – x16 and 60-Ball – x4, x8 Descriptions (Continued)**

| Symbol | Type | Description |
|---|---|---|
| DQS, DQS# | I/O | **Data strobe:** Output with read data, input with write data for source synchronous operation. Edge-aligned with read data, center-aligned with write data. DQS# is only used when differential data strobe mode is enabled via the LOAD MODE command. |
| LDQS, LDQS# | I/O | **Data strobe for lower byte:** Output with read data, input with write data for source synchronous operation. Edge-aligned with read data, center-aligned with write data. LDQS# is only used when differential data strobe mode is enabled via the LOAD MODE command. |
| UDQS, UDQS# | I/O | **Data strobe for upper byte:** Output with read data, input with write data for source synchronous operation. Edge-aligned with read data, center-aligned with write data. UDQS# is only used when differential data strobe mode is enabled via the LOAD MODE command. |
| RDQS, RDQS# | Output | **Redundant data strobe:** For x8 only. RDQS is enabled/disabled via the LOAD MODE command to the extended mode register (EMR). When RDQS is enabled, RDQS is output with read data only and is ignored during write data. When RDQS is disabled, ball B3 becomes data mask (see DM ball). RDQS# is only used when RDQS is enabled *and* differential data strobe mode is enabled. |
| $V_{DD}$ | Supply | **Power supply:** 1.8V ±0.1V. |
| $V_{DDQ}$ | Supply | **DQ power supply:** 1.8V ±0.1V. Isolated on the device for improved noise immunity. |
| $V_{DDL}$ | Supply | **DLL power supply:** 1.8V ±0.1V. |
| $V_{REF}$ | Supply | SSTL_18 reference voltage ($V_{DDQ}$/2). |
| $V_{SS}$ | Supply | Ground. |
| $V_{SSDL}$ | Supply | **DLL ground:** Isolated on the device from $V_{SS}$ and $V_{SSQ}$. |
| $V_{SSQ}$ | Supply | **DQ ground:** Isolated on the device for improved noise immunity. |
| NC | – | **No connect:** These balls should be left unconnected. |
| NF | – | **No function:** x8: these balls are used as DQ[7:4]; x4: they are no function. |
| NU | – | **Not used:** For x16 only. If EMR(E10) = 0, A8 and E8 are UDQS# and LDQS#. If EMR(E10) = 1, then A8 and E8 are not used. |
| NU | – | **Not used:** For x8 only. If EMR(E10) = 0, A2 and E8 are RDQS# and DQS#. If EMR(E10) = 1, then A2 and E8 are not used. |
| RFU | – | **Reserved for future use:** Row address bits A13 (x16 only), A14, and A15. |


Micron Technology, Inc. reserves the right to change products or specifications without notice.
© 2007 Micron Technology, Inc. All rights reserved.

# Packaging

## Package Dimensions

**Figure 8: 84-Ball FBGA Package (8mm x 12.5mm) – x16 Die Rev :H**

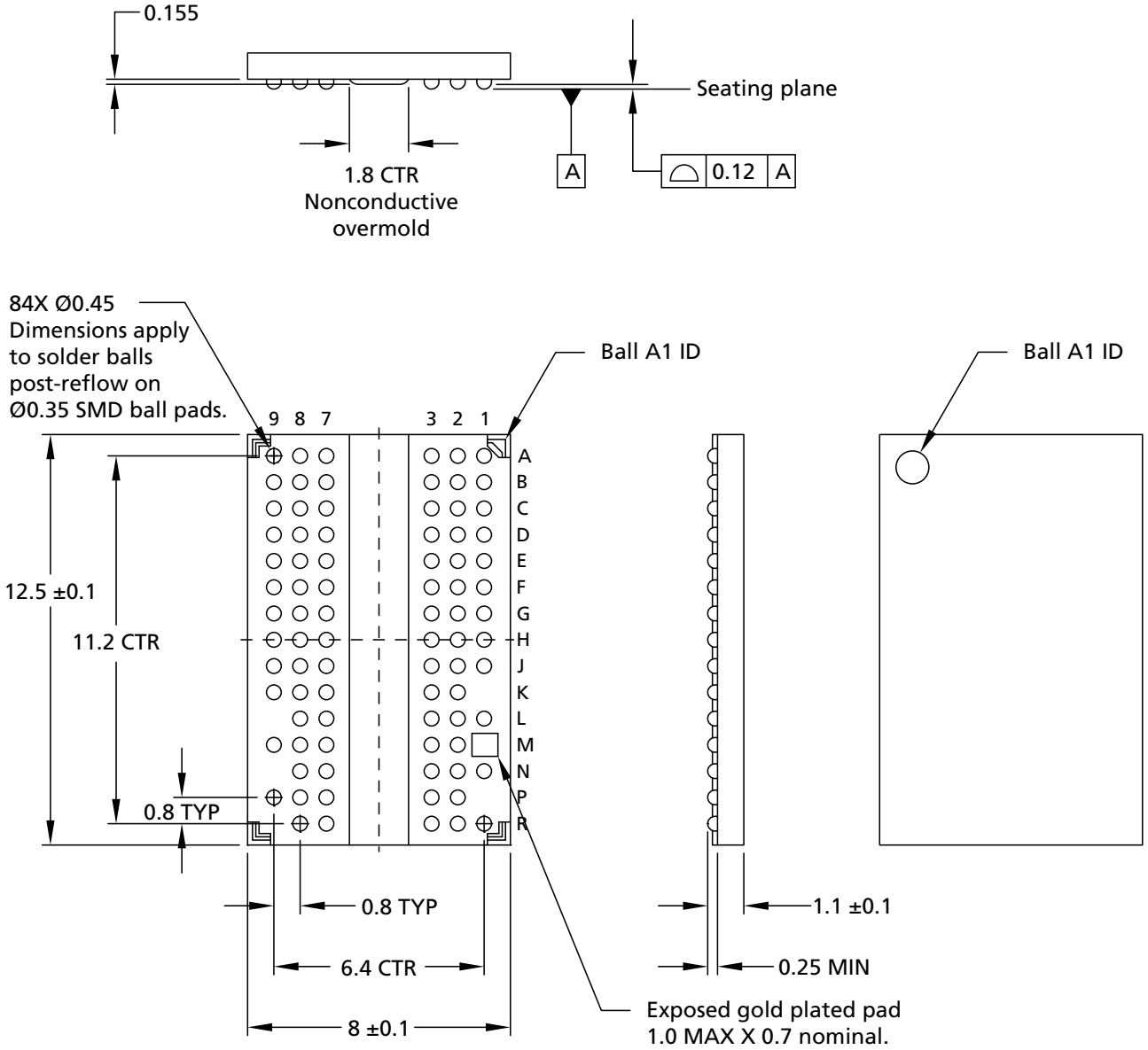


Notes:
1. All dimensions are in millimeters.
2. Solder ball material: SAC305 (96.5% Sn, 3% Ag, 0.5% Cu) or leaded Eutectic (62% Sn, 36%Pb, 2% Ag).


Micron Technology, Inc. reserves the right to change products or specifications without notice.
© 2007 Micron Technology, Inc. All rights reserved.

**Figure 9: 60-Ball FBGA (8mm x 10mm) – x4, x8 Die Rev :H**

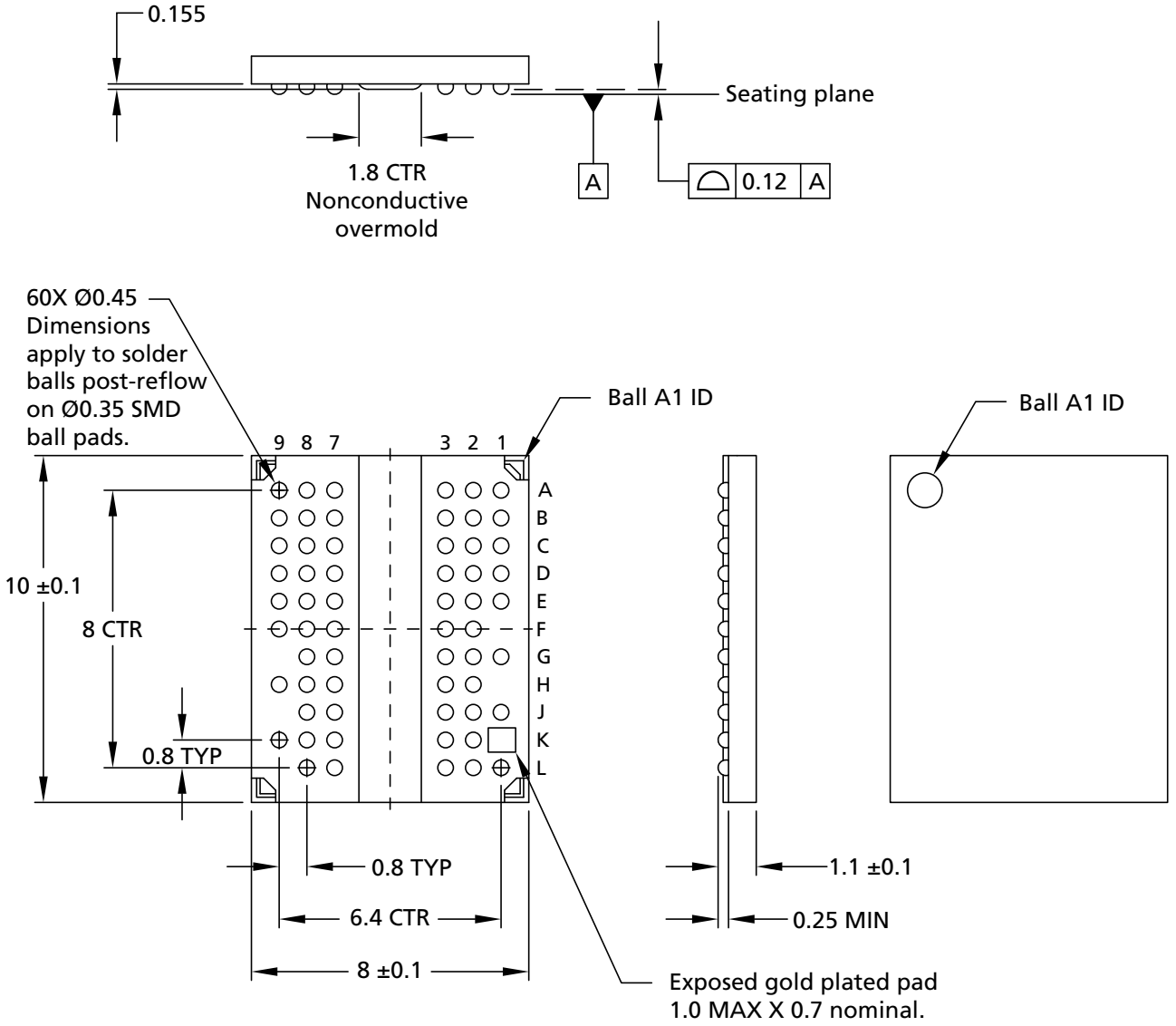


Notes:
1. All dimensions are in millimeters.
2. Solder ball material: SAC305 (96.5% Sn, 3% Ag, 0.5% Cu) or leaded Eutectic (62% Sn, 36%Pb, 2% Ag).


Micron Technology, Inc. reserves the right to change products or specifications without notice.
© 2007 Micron Technology, Inc. All rights reserved.

**Figure 10: 84-Ball FBGA Package (8mm x 12.5mm) – x16; "NF" Die Rev :M**

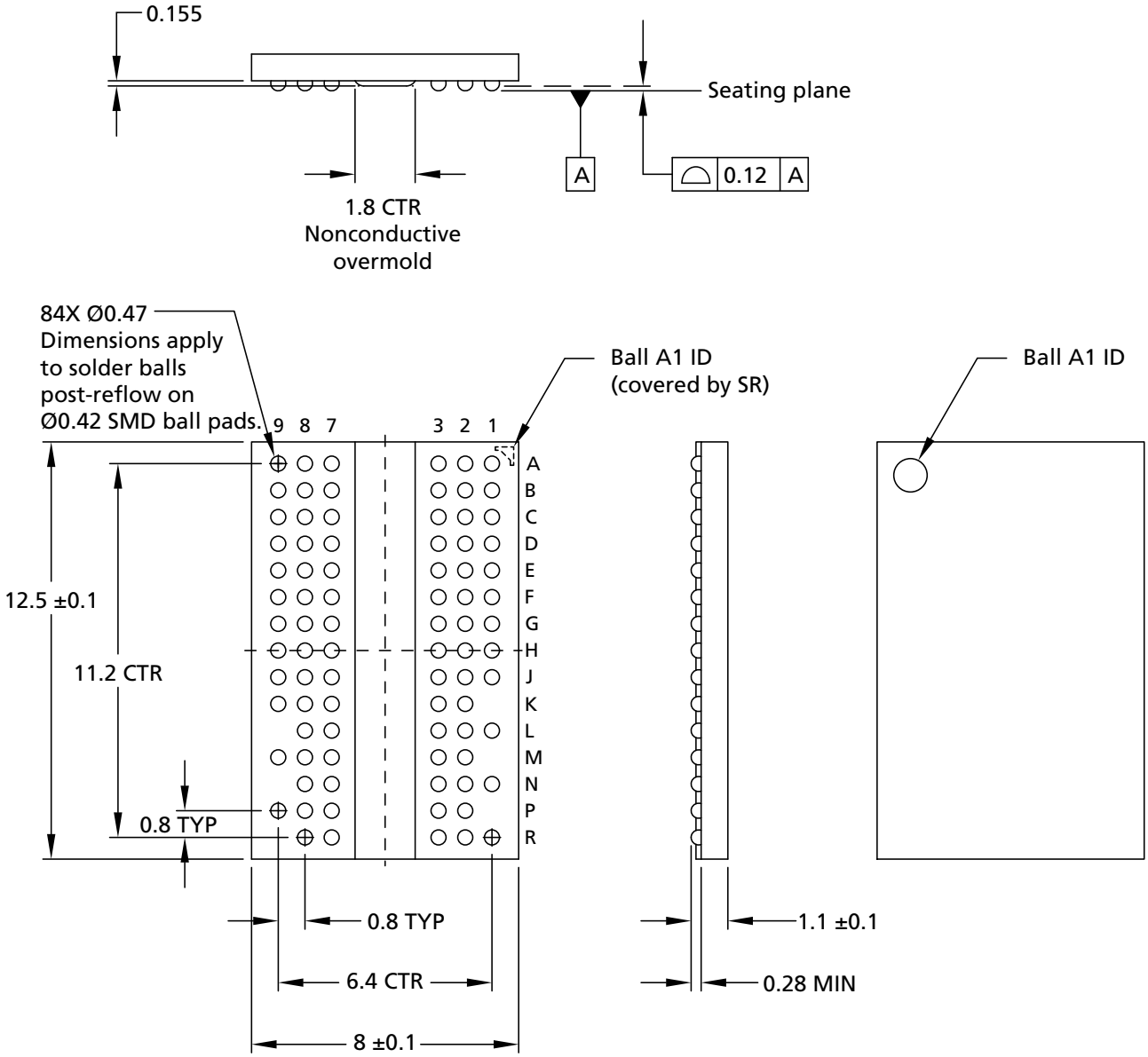


Notes: 1. All dimensions are in millimeters.
2. Solder ball material: SAC305 (96.5% Sn, 3% Ag, 0.5% Cu).


Micron Technology, Inc. reserves the right to change products or specifications without notice.
© 2007 Micron Technology, Inc. All rights reserved.

**Figure 11: 60-Ball FBGA (8mm x 10mm) – x4, x8; "SH" Die Rev :M**

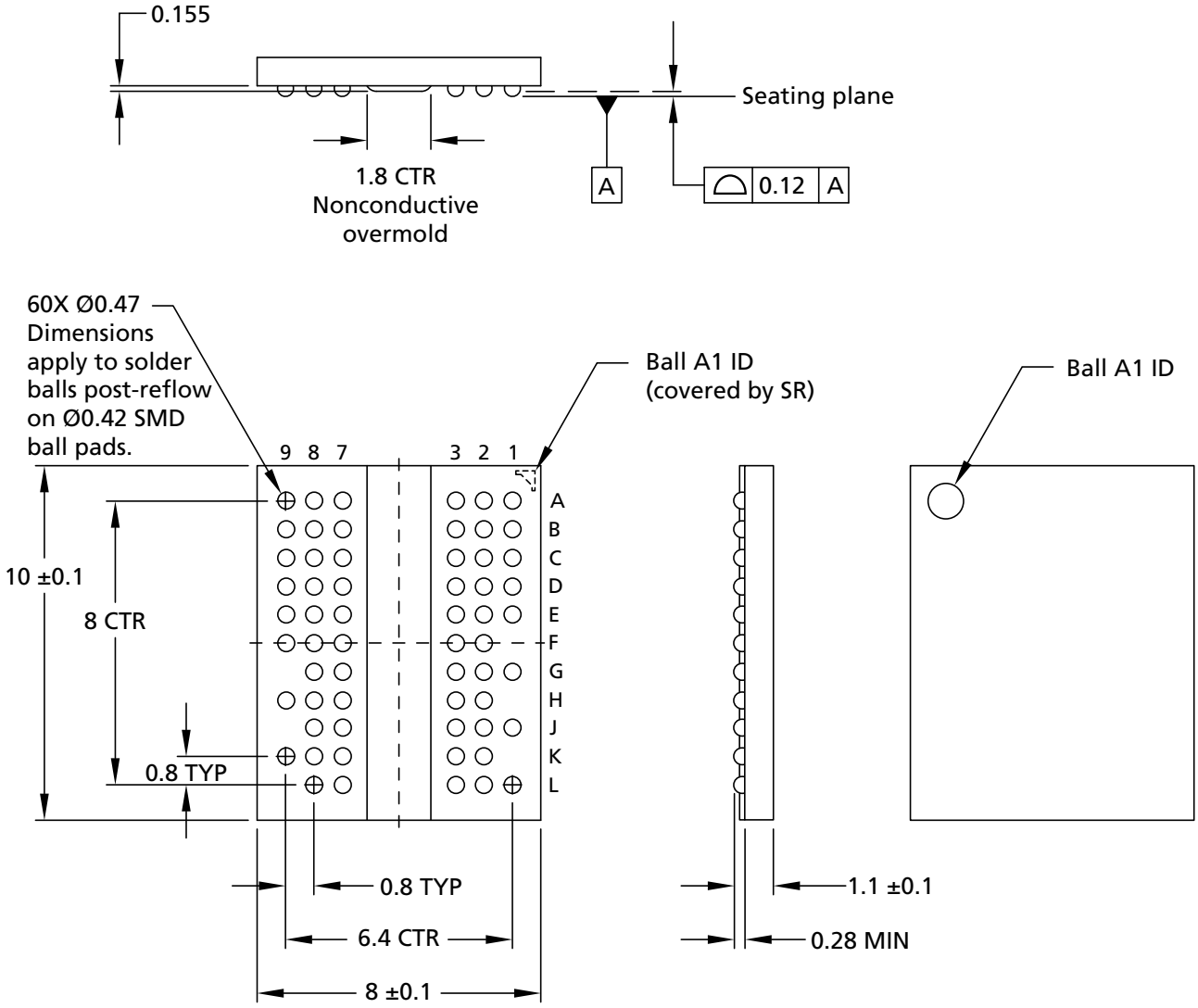


Notes:
1. All dimensions are in millimeters.
2. Solder ball material: SAC305 (96.5% Sn, 3% Ag, 0.5% Cu).


Micron Technology, Inc. reserves the right to change products or specifications without notice.
© 2007 Micron Technology, Inc. All rights reserved.

## FBGA Package Capacitance

### Table 4: Input Capacitance

| Parameter | Symbol | Min | Max | Units | Notes |
|---|---|---|---|---|---|
| Input capacitance: CK, CK# | $C_{CK}$ | 1.0 | 2.0 | pF | 1 |
| Delta input capacitance: CK, CK# | $C_{DCK}$ | – | 0.25 | pF | 2, 3 |
| Input capacitance: Address balls, bank address balls, CS#, RAS#, CAS#, WE#, CKE, ODT | $C_I$ | 1.0 | 2.0 | pF | 1, 4 |
| Delta input capacitance: Address balls, bank address balls, CS#, RAS#, CAS#, WE#, CKE, ODT | $C_{DI}$ | – | 0.25 | pF | 2, 3 |
| Input/output capacitance: DQ, DQS, DM, NF | $C_{IO}$ | 2.5 | 4.0 | pF | 1, 5 |
| Delta input/output capacitance: DQ, DQS, DM, NF | $C_{DIO}$ | – | 0.5 | pF | 2, 3 |

Notes:
1. This parameter is sampled. $V_{DD}$ = 1.8V ±0.1V, $V_{DDQ}$ = 1.8V ±0.1V, $V_{REF}$ = $V_{SS}$, *f* = 100 MHz, $T_C$ = 25°C, $V_{OUT(DC)}$ = $V_{DDQ}/2$, $V_{OUT}$ (peak-to-peak) = 0.1V. DM input is grouped with I/O balls, reflecting the fact that they are matched in loading.
2. The capacitance per ball group will not differ by more than this maximum amount for any given device.
3. ΔC are not pass/fail parameters; they are targets.
4. Reduce MAX limit by 0.25pF for -25, -25E, and -187E speed devices.
5. Reduce MAX limit by 0.5pF for -3, -3E, -25, -25E, and -187E speed devices.


Micron Technology, Inc. reserves the right to change products or specifications without notice.
© 2007 Micron Technology, Inc. All rights reserved.

# Electrical Specifications – Absolute Ratings

Stresses greater than those listed may cause permanent damage to the device. This is a stress rating only, and functional operation of the device at these or any other conditions outside those indicated in the operational sections of this specification is not implied. Exposure to absolute maximum rating conditions for extended periods may affect reliability.

**Table 5: Absolute Maximum DC Ratings**

| Parameter | Symbol | Min | Max | Units | Notes |
|---|---|---|---|---|---|
| $V_{DD}$ supply voltage relative to $V_{SS}$ | $V_{DD}$ | –1.0 | 2.3 | V | 1 |
| $V_{DDQ}$ supply voltage relative to $V_{SSQ}$ | $V_{DDQ}$ | –0.5 | 2.3 | V | 1, 2 |
| $V_{DDL}$ supply voltage relative to $V_{SSL}$ | $V_{DDL}$ | –0.5 | 2.3 | V | 1 |
| Voltage on any ball relative to $V_{SS}$ | $V_{IN}$, $V_{OUT}$ | –0.5 | 2.3 | V | 3 |
| Input leakage current; any input 0V ≤ $V_{IN}$ ≤ $V_{DD}$; all other balls not under test = 0V | $I_I$ | –5 | 5 | µA | |
| Output leakage current; 0V ≤ $V_{OUT}$ ≤ $V_{DDQ}$; DQ and ODT disabled | $I_{OZ}$ | –5 | 5 | µA | |
| $V_{REF}$ leakage current; $V_{REF}$ = Valid $V_{REF}$ level | $I_{VREF}$ | –2 | 2 | µA | |

Notes:
1. $V_{DD}$, $V_{DDQ}$, and $V_{DDL}$ must be within 300mV of each other at all times; this is not required when power is ramping down.
2. $V_{REF}$ ≤ 0.6 × $V_{DDQ}$; however, $V_{REF}$ may be ≥ $V_{DDQ}$ provided that $V_{REF}$ ≤ 300mV.
3. Voltage on any I/O may not exceed voltage on $V_{DDQ}$.

## Temperature and Thermal Impedance

It is imperative that the DDR2 SDRAM device's temperature specifications, shown in Table 6 (page 25), be maintained in order to ensure the junction temperature is in the proper operating range to meet data sheet specifications. An important step in maintaining the proper junction temperature is using the device's thermal impedances correctly. The thermal impedances are listed in Table 7 (page 27) for the applicable and available die revision and packages.

Incorrectly using thermal impedances can produce significant errors. Read Micron technical note TN-00-08, "Thermal Applications" (see www.micron.com/products/support/technical-notes), prior to using the thermal impedances listed in Table 7. For designs that are expected to last several years and require the flexibility to use several DRAM die shrinks, consider using final target theta values (rather than existing values) to account for increased thermal impedances from the die size reduction.

The DDR2 SDRAM device's safe junction temperature range can be maintained when the $T_C$ specification is not exceeded. In applications where the device's ambient temperature is too high, use of forced air and/or heat sinks may be required in order to satisfy the case temperature specifications.


Micron Technology, Inc. reserves the right to change products or specifications without notice.
© 2007 Micron Technology, Inc. All rights reserved.

**Table 6: Temperature Limits**

| Parameter | Symbol | Min | Max | Units | Notes |
|---|---|---|---|---|---|
| Storage temperature | $T_{STG}$ | –55 | 150 | °C | 1 |
| Operating temperature: commercial | $T_C$ | 0 | 85 | °C | 2, 3 |
| Operating temperature: industrial | $T_C$ | –40 | 95 | °C | 2, 3, 4 |
| | $T_A$ | –40 | 85 | °C | 4, 5 |
| Operating temperature: automotive | $T_C$ | –40 | 105 | °C | 2, 3, 4 |
| | $T_A$ | –40 | 105 | °C | 4, 5 |

Notes:
1. MAX storage case temperature $T_{STG}$ is measured in the center of the package, as shown in Figure 12. This case temperature limit is allowed to be exceeded briefly during package reflow, as noted in Micron technical note TN-00-15, "Recommended Soldering Parameters."
2. MAX operating case temperature $T_C$ is measured in the center of the package, as shown in Figure 12.
3. Device functionality is not guaranteed if the device exceeds maximum $T_C$ during operation.
4. Both temperature specifications must be satisfied.
5. Operating ambient temperature surrounding the package.


Micron Technology, Inc. reserves the right to change products or specifications without notice.
© 2007 Micron Technology, Inc. All rights reserved.

**Figure 12: Example Temperature Test Point Location**

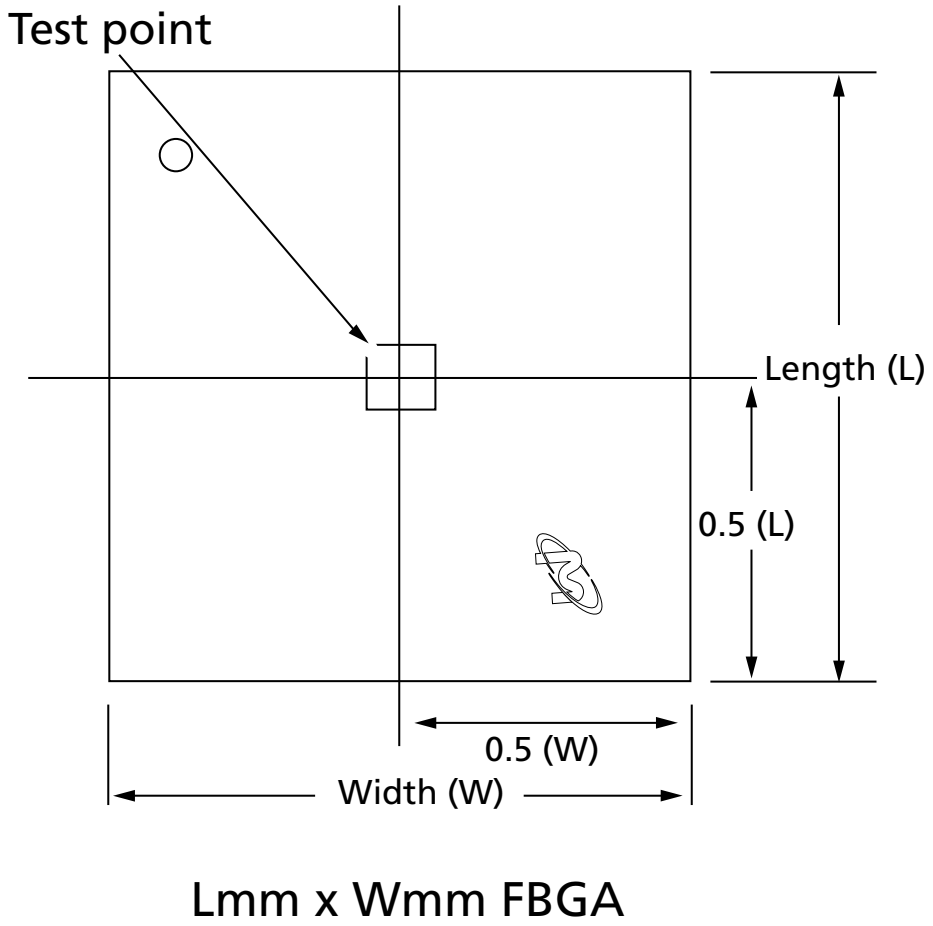



Micron Technology, Inc. reserves the right to change products or specifications without notice.
© 2007 Micron Technology, Inc. All rights reserved.

**Table 7: Thermal Impedance**

| Die Revision | Package | Substrate (pcb) | θ JA (°C/W) Airflow = 0m/s | θ JA (°C/W) Airflow = 1m/s | θ JA (°C/W) Airflow = 2m/s | θ JB (°C/W) | θ JC (°C/W) |
|---|---|---|---|---|---|---|---|
| H [1] | 60-ball | 2-layer | 72.5 | 55.5 | 49.5 | 35.6 | 5.7 |
| | | 4-layer | 54.5 | 45.7 | 42.3 | 35.2 | |
| | 84-ball | 2-layer | 68.8 | 52.0 | 46.5 | 32.5 | 5.6 |
| | | 4-layer | 51.3 | 42.7 | 39.6 | 32.3 | |
| M [1] | 60-ball | Low Conductivity | 85.4 | 70.6 | 64.5 | 42.8 | 11.7 |
| | | High Conductivity | 63.2 | 56.1 | 52.8 | | |
| | 84-ball | Low Conductivity | 80.8 | 67.0 | 61.6 | 44.7 | 11.7 |
| | | High Conductivity | 59.7 | 53.3 | 50.7 | | |

Note: 1. Thermal resistance data is based on a number of samples from multiple lots and should be viewed as a typical number.


Micron Technology, Inc. reserves the right to change products or specifications without notice.
© 2007 Micron Technology, Inc. All rights reserved.

# Electrical Specifications – $I_{DD}$ Parameters

## $I_{DD}$ Specifications and Conditions

### Table 8: General $I_{DD}$ Parameters

| $I_{DD}$ Parameters | -187E | -25E | -25 | -3E | -3 | -37E | Units |
|---|---|---|---|---|---|---|---|
| CL ($I_{DD}$) | 7 | 5 | 6 | 4 | 5 | 4 | $^{t}$CK |
| $^{t}$RCD ($I_{DD}$) | 13.125 | 12.5 | 15 | 12 | 15 | 15 | ns |
| $^{t}$RC ($I_{DD}$) | 58.125 | 57.5 | 60 | 57 | 60 | 60 | ns |
| $^{t}$RRD ($I_{DD}$) - x4/x8 (1KB) | 7.5 | 7.5 | 7.5 | 7.5 | 7.5 | 7.5 | ns |
| $^{t}$RRD ($I_{DD}$) - x16 (2KB) | 10 | 10 | 10 | 10 | 10 | 10 | ns |
| $^{t}$CK ($I_{DD}$) | 1.875 | 2.5 | 2.5 | 3 | 3 | 3.75 | ns |
| $^{t}$RAS MIN ($I_{DD}$) | 45 | 45 | 45 | 45 | 45 | 45 | ns |
| $^{t}$RAS MAX ($I_{DD}$) | 70,000 | 70,000 | 70,000 | 70,000 | 70,000 | 70,000 | ns |
| $^{t}$RP ($I_{DD}$) | 13.125 | 12.5 | 15 | 12 | 15 | 15 | ns |
| $^{t}$RFC ($I_{DD}$ - 256Mb) | 75 | 75 | 75 | 75 | 75 | 75 | ns |
| $^{t}$RFC ($I_{DD}$ - 512Mb) | 105 | 105 | 105 | 105 | 105 | 105 | ns |
| $^{t}$RFC ($I_{DD}$ - 1Gb) | 127.5 | 127.5 | 127.5 | 127.5 | 127.5 | 127.5 | ns |
| $^{t}$RFC ($I_{DD}$ - 2Gb) | 197.5 | 197.5 | 197.5 | 197.5 | 197.5 | 197.5 | ns |
| $^{t}$FAW ($I_{DD}$) - x4/x8 (1KB) | Defined by pattern in Table 9 (page 28) | | | | | | ns |
| $^{t}$FAW ($I_{DD}$) - x16 (2KB) | Defined by pattern in Table 9 (page 28) | | | | | | ns |

## $I_{DD7}$ Conditions

The detailed timings are shown below for $I_{DD7}$. Where general $I_{DD}$ parameters in Table 8 (page 28) conflict with pattern requirements of Table 9, then Table 9 requirements take precedence.

### Table 9: $I_{DD7}$ Timing Patterns (8-Bank Interleave READ Operation)

| Speed Grade | $I_{DD7}$ Timing Patterns |
|---|---|
| Timing patterns for 8-bank x4/x8 devices | |
| -5E | A0 RA0 A1 RA1 A2 RA2 A3 RA3 A4 RA4 A5 RA5 A6 RA6 A7 RA7 |
| -37E | A0 RA0 A1 RA1 A2 RA2 A3 RA3 D D A4 RA4 A5 RA5 A6 RA6 A7 RA7 D D |
| -3 | A0 RA0 D A1 RA1 D A2 RA2 D A3 RA3 D D A4 RA4 D A5 RA5 D A6 RA6 D A7 RA7 D D |
| -3E | A0 RA0 D A1 RA1 D A2 RA2 D A3 RA3 D D A4 RA4 D A5 RA5 D A6 RA6 D A7 RA7 D D |
| -25 | A0 RA0 D A1 RA1 D A2 RA2 D A3 RA3 D D D A4 RA4 D A5 RA5 D A6 RA6 D A7 RA7 D D D |
| -25E | A0 RA0 D A1 RA1 D A2 RA2 D A3 RA3 D D D A4 RA4 D A5 RA5 D A6 RA6 D A7 RA7 D D D |
| -187E | A0 RA0 D D A1 RA1 D D A2 RA2 D D A3 RA3 D D D D D A4 RA4 D D A5 RA5 D D A6 RA6 D D A7 RA7 D D D D D |
| Timing patterns for 8-bank x16 devices | |
| -5E | A0 RA0 A1 RA1 A2 RA2 A3 RA3 D D A4 RA4 A5 RA5 A6 RA6 A7 RA7 D D |


Micron Technology, Inc. reserves the right to change products or specifications without notice.
© 2007 Micron Technology, Inc. All rights reserved.

**Table 9: $I_{DD7}$ Timing Patterns (8-Bank Interleave READ Operation) (Continued)**

| Speed Grade | $I_{DD7}$ Timing Patterns |
|---|---|
| -37E | A0 RA0 D A1 RA1 D A2 RA2 D A3 RA3 D D D A4 RA4 D A5 RA5 D A6 RA6 D A7 RA7 D D D |
| -3 | A0 RA0 D D A1 RA1 D D A2 RA2 D D A3 RA3 D D D A4 RA4 D D A5 RA5 D D A6 RA6 D D A7 RA7 D D D |
| -3E | A0 RA0 D D A1 RA1 D D A2 RA2 D D A3 RA3 D D D A4 RA4 D D A5 RA5 D D A6 RA6 D D A7 RA7 D D D |
| -25 | A0 RA0 D D A1 RA1 D D A2 RA2 D D A3 RA3 D D D D A4 RA4 D D A5 RA5 D D A6 RA6 D D A7 RA7 D D D D |
| -25E | A0 RA0 D D A1 RA1 D D A2 RA2 D D A3 RA3 D D D D A4 RA4 D D A5 RA5 D D A6 RA6 D D A7 RA7 D D D D |
| -187E | A0 RA0 D D D D A1 RA1 D D D D A2 RA2 D D D D A3 RA3 D D D D A4 RA4 D D D D A5 RA5 D D D D A6 RA6 D D D D A7 RA7 D D D D |

Notes:
1. A = active; RA = read auto precharge; D = deselect.
2. All banks are being interleaved at $^{t}RC$ ($I_{DD}$) without violating $^{t}RRD$ ($I_{DD}$) using a BL = 4.
3. Control and address bus inputs are stable during deselects.


Micron Technology, Inc. reserves the right to change products or specifications without notice.
© 2007 Micron Technology, Inc. All rights reserved.

**Table 10: DDR2 $I_{DD}$ Specifications and Conditions (Die Revision H)**

Notes: 1–7 apply to the entire table

| Parameter/Condition | Symbol | Configuration | -187E | -25E | -3 | Units |
|---|---|---|---|---|---|---|
| **Operating one bank active-precharge current:** $^tCK = {}^tCK (I_{DD})$, $^tRC = {}^tRC (I_{DD})$, $^tRAS = {}^tRAS$ MIN $(I_{DD})$; CKE is HIGH, CS# is HIGH between valid commands; Address bus inputs are switching; Data bus inputs are switching | $I_{DD0}$ | x4, x8 | 75 | 65 | 60 | mA |
| | | x16 | 90 | 80 | 75 | |
| **Operating one bank active-read-precharge current:** $I_{OUT}$ = 0mA; BL = 4, CL = CL $(I_{DD})$, AL = 0; $^tCK = {}^tCK (I_{DD})$, $^tRC = {}^tRC (I_{DD})$, $^tRAS = {}^tRAS$ MIN $(I_{DD})$, $^tRCD = {}^tRCD (I_{DD})$; CKE is HIGH, CS# is HIGH between valid commands; Address bus inputs are switching; Data pattern is same as $I_{DD4W}$ | $I_{DD1}$ | x4, x8 | 85 | 75 | 70 | mA |
| | | x16 | 100 | 95 | 90 | |
| **Precharge power-down current:** All banks idle; $^tCK = {}^tCK (I_{DD})$; CKE is LOW; Other control and address bus inputs are stable; Data bus inputs are floating | $I_{DD2P}$ | x4, x8, x16 | 7 | 7 | 7 | mA |
| **Precharge quiet standby current:** All banks idle; $^tCK = {}^tCK (I_{DD})$; CKE is HIGH, CS# is HIGH; Other control and address bus inputs are stable; Data bus inputs are floating | $I_{DD2Q}$ | x4, x8 | 28 | 24 | 24 | mA |
| | | x16 | 30 | 26 | 26 | |
| **Precharge standby current:** All banks idle; $^tCK = {}^tCK (I_{DD})$; CKE is HIGH, CS# is HIGH; Other control and address bus inputs are switching; Data bus inputs are switching | $I_{DD2N}$ | x4, x8 | 34 | 28 | 24 | mA |
| | | x16 | 36 | 30 | 26 | |
| **Active power-down current:** All banks open; $^tCK = {}^tCK (I_{DD})$; CKE is LOW; Other control and address bus inputs are stable; Data bus inputs are floating | $I_{DD3Pf}$ | Fast exit MR12 = 0 | 23 | 20 | 15 | mA |
| | $I_{DD3Ps}$ | Slow exit MR12 = 1 | 10 | 10 | 10 | |
| **Active standby current:** All banks open; $^tCK = {}^tCK (I_{DD})$, $^tRAS = {}^tRAS$ MAX $(I_{DD})$, $^tRP = {}^tRP (I_{DD})$; CKE is HIGH, CS# is HIGH between valid commands; Other control and address bus inputs are switching; Data bus inputs are switching | $I_{DD3N}$ | x4, x8 | 40 | 33 | 30 | mA |
| | | x16 | 42 | 35 | 32 | |
| **Operating burst write current:** All banks open, continuous burst writes; BL = 4, CL = CL $(I_{DD})$, AL = 0; $^tCK = {}^tCK (I_{DD})$, $^tRAS = {}^tRAS$ MAX $(I_{DD})$, $^tRP = {}^tRP (I_{DD})$; CKE is HIGH, CS# is HIGH between valid commands; Address bus inputs are switching; Data bus inputs are switching | $I_{DD4W}$ | x4 ,x8 | 145 | 125 | 115 | mA |
| | | x16 | 185 | 160 | 135 | |
| **Operating burst read current:** All banks open, continuous burst reads, $I_{OUT}$ = 0mA; BL = 4, CL = CL $(I_{DD})$, AL = 0; $^tCK = {}^tCK (I_{DD})$, $^tRAS = {}^tRAS$ MAX $(I_{DD})$, $^tRP = {}^tRP (I_{DD})$; CKE is HIGH, CS# is HIGH between valid commands; Address bus inputs are switching; Data bus inputs are switching | $I_{DD4R}$ | x4, x8 | 140 | 120 | 110 | mA |
| | | x16 | 180 | 150 | 125 | |


Micron Technology, Inc. reserves the right to change products or specifications without notice.
© 2007 Micron Technology, Inc. All rights reserved.

**Table 10: DDR2 $I_{DD}$ Specifications and Conditions (Die Revision H) (Continued)**

Notes: 1–7 apply to the entire table

| Parameter/Condition | Symbol | Configuration | -187E | -25E | -3 | Units |
|---|---|---|---|---|---|---|
| **Burst refresh current:** $^tCK = {}^tCK$ ($I_{DD}$); REFRESH command at every $^tRFC$ ($I_{DD}$) interval; CKE is HIGH, CS# is HIGH between valid commands; Other control and address bus inputs are switching; Data bus inputs are switching | $I_{DD5}$ | x4, x8 | 155 | 145 | 140 | mA |
| | | x16 | 160 | 150 | 145 | |
| **Self refresh current:** CK and CK# at 0V; CKE ≤ 0.2V; Other control and address bus inputs are floating; Data bus inputs are floating | $I_{DD6}$ | x4, x8, x16 | 7 | 7 | 7 | mA |
| | $I_{DD6L}$ | | 5 | 5 | 5 | |
| **Operating bank interleave read current:** All bank interleaving reads, $I_{OUT}$ = 0mA; BL = 4, CL = CL ($I_{DD}$), AL = $^tRCD$ ($I_{DD}$) - 1 × $^tCK$ ($I_{DD}$); $^tCK = {}^tCK$ ($I_{DD}$), $^tRC = {}^tRC$ ($I_{DD}$), $^tRRD = {}^tRRD$ ($I_{DD}$), $^tRCD = {}^tRCD$ ($I_{DD}$); CKE is HIGH, CS# is HIGH between valid commands; Address bus inputs are stable during deselects; Data bus inputs are switching; See IDD7 Conditions (page 28) for details | $I_{DD7}$ | x4, x8 | 220 | 210 | 185 | mA |
| | | x16 | 270 | 260 | 230 | |

Notes:
1. $I_{DD}$ specifications are tested after the device is properly initialized. 0°C ≤ $T_C$ ≤ +85°C.
2. $V_{DD}$ = +1.8V ±0.1V, $V_{DDQ}$ = +1.8V ±0.1V, $V_{DDL}$ = +1.8V ±0.1V, $V_{REF} = V_{DDQ}/2$.
3. $I_{DD}$ parameters are specified with ODT disabled.
4. Data bus consists of DQ, DM, DQS, DQS#, RDQS, RDQS#, LDQS, LDQS#, UDQS, and UDQS#. $I_{DD}$ values must be met with all combinations of EMR bits 10 and 11.
5. Definitions for $I_{DD}$ conditions:

   **LOW** $V_{IN} \le V_{IL(AC)max}$

   **HIGH** $V_{IN} \ge V_{IH(AC)min}$

   **Stable** Inputs stable at a HIGH or LOW level

   **Floating** Inputs at $V_{REF} = V_{DDQ}/2$

   **Switching** Inputs changing between HIGH and LOW every other clock cycle (once per two clocks) for address and control signals

   **Switching** Inputs changing between HIGH and LOW every other data transfer (once per clock) for DQ signals, not including masks or strobes
6. $I_{DD1}$, $I_{DD4R}$, and $I_{DD7}$ require A12 in EMR to be enabled during testing.
7. The following $I_{DD}$ values must be derated ($I_{DD}$ limits increase) on IT-option and AT-option devices when operated outside of the range 0°C ≤ $T_C$ ≤ 85°C:

   **When $T_C$ ≤ 0°C** $I_{DD2P}$ and $I_{DD3P(SLOW)}$ must be derated by 4%; $I_{DD4R}$ and $I_{DD4W}$ must be derated by 2%; and $I_{DD6}$ and $I_{DD7}$ must be derated by 7%

   **When $T_C$ ≥ 85°C** $I_{DD0}$, $I_{DD1}$, $I_{DD2N}$, $I_{DD2Q}$, $I_{DD3N}$, $I_{DD3P(FAST)}$, $I_{DD4R}$, $I_{DD4W}$, and $I_{DD5}$ must be derated by 2%; $I_{DD2P}$ must be derated by 20%; $I_{DD3P(SLOW)}$ must be derated by 30%; and $I_{DD6}$ must be derated by 80% ($I_{DD6}$ will increase by this amount if $T_C$ < 85°C and the 2X refresh option is still enabled)


Micron Technology, Inc. reserves the right to change products or specifications without notice.
© 2007 Micron Technology, Inc. All rights reserved.

**Table 11: DDR2 $I_{DD}$ Specifications and Conditions (Die Revision M)**

Notes: 1–7 apply to the entire table

| Parameter/Condition | Symbol | Configuration | -187E | -25E | -3 | Units |
|---|---|---|---|---|---|---|
| **Operating one bank active-precharge current:** $^tCK = {}^tCK (I_{DD})$, $^tRC = {}^tRC (I_{DD})$, $^tRAS = {}^tRAS$ MIN $(I_{DD})$; CKE is HIGH, CS# is HIGH between valid commands; Address bus inputs are switching; Data bus inputs are switching | $I_{DD0}$ | x4, x8 | 75 | 65 | 60 | mA |
| | | x16 | 90 | 80 | 75 | |
| **Operating one bank active-read-precharge current:** $I_{OUT}$ = 0mA; BL = 4, CL = CL $(I_{DD})$, AL = 0; $^tCK = {}^tCK (I_{DD})$, $^tRC = {}^tRC (I_{DD})$, $^tRAS = {}^tRAS$ MIN $(I_{DD})$, $^tRCD = {}^tRCD (I_{DD})$; CKE is HIGH, CS# is HIGH between valid commands; Address bus inputs are switching; Data pattern is same as $I_{DD4W}$ | $I_{DD1}$ | x4, x8 | 85 | 75 | 70 | mA |
| | | x16 | 100 | 95 | 90 | |
| **Precharge power-down current:** All banks idle; $^tCK = {}^tCK (I_{DD})$; CKE is LOW; Other control and address bus inputs are stable; Data bus inputs are floating | $I_{DD2P}$ | x4, x8, x16 | 10 | 10 | 10 | mA |
| **Precharge quiet standby current:** All banks idle; $^tCK = {}^tCK (I_{DD})$; CKE is HIGH, CS# is HIGH; Other control and address bus inputs are stable; Data bus inputs are floating | $I_{DD2Q}$ | x4, x8 | 28 | 24 | 24 | mA |
| | | x16 | 30 | 26 | 26 | |
| **Precharge standby current:** All banks idle; $^tCK = {}^tCK (I_{DD})$; CKE is HIGH, CS# is HIGH; Other control and address bus inputs are switching; Data bus inputs are switching | $I_{DD2N}$ | x4, x8 | 34 | 28 | 24 | mA |
| | | x16 | 36 | 30 | 26 | |
| **Active power-down current:** All banks open; $^tCK = {}^tCK (I_{DD})$; CKE is LOW; Other control and address bus inputs are stable; Data bus inputs are floating | $I_{DD3Pf}$ | Fast exit MR12 = 0 | 32 | 30 | 28 | mA |
| | $I_{DD3Ps}$ | Slow exit MR12 = 1 | 20 | 20 | 20 | |
| **Active standby current:** All banks open; $^tCK = {}^tCK (I_{DD})$, $^tRAS = {}^tRAS$ MAX $(I_{DD})$, $^tRP = {}^tRP (I_{DD})$; CKE is HIGH, CS# is HIGH between valid commands; Other control and address bus inputs are switching; Data bus inputs are switching | $I_{DD3N}$ | x4, x8 | 40 | 33 | 30 | mA |
| | | x16 | 43 | 38 | 36 | |
| **Operating burst write current:** All banks open, continuous burst writes; BL = 4, CL = CL $(I_{DD})$, AL = 0; $^tCK = {}^tCK (I_{DD})$, $^tRAS = {}^tRAS$ MAX $(I_{DD})$, $^tRP = {}^tRP (I_{DD})$; CKE is HIGH, CS# is HIGH between valid commands; Address bus inputs are switching; Data bus inputs are switching | $I_{DD4W}$ | x4 ,x8 | 145 | 125 | 115 | mA |
| | | x16 | 185 | 160 | 135 | |
| **Operating burst read current:** All banks open, continuous burst reads, $I_{OUT}$ = 0mA; BL = 4, CL = CL $(I_{DD})$, AL = 0; $^tCK = {}^tCK (I_{DD})$, $^tRAS = {}^tRAS$ MAX $(I_{DD})$, $^tRP = {}^tRP (I_{DD})$; CKE is HIGH, CS# is HIGH between valid commands; Address bus inputs are switching; Data bus inputs are switching | $I_{DD4R}$ | x4, x8 | 140 | 120 | 110 | mA |
| | | x16 | 180 | 150 | 125 | |


Micron Technology, Inc. reserves the right to change products or specifications without notice.
© 2007 Micron Technology, Inc. All rights reserved.

**Table 11: DDR2 $I_{DD}$ Specifications and Conditions (Die Revision M) (Continued)**

Notes: 1–7 apply to the entire table

| Parameter/Condition | Symbol | Configuration | -187E | -25E | -3 | Units |
|---|---|---|---|---|---|---|
| **Burst refresh current:** $^tCK = {}^tCK$ ($I_{DD}$); REFRESH command at every $^tRFC$ ($I_{DD}$) interval; CKE is HIGH, CS# is HIGH between valid commands; Other control and address bus inputs are switching; Data bus inputs are switching | $I_{DD5}$ | x4, x8 | 165 | 155 | 150 | mA |
| | | x16 | 170 | 160 | 155 | |
| **Self refresh current:** CK and CK# at 0V; CKE ≤ 0.2V; Other control and address bus inputs are floating; Data bus inputs are floating | $I_{DD6}$ | x4, x8, x16 | 7 | 7 | 7 | mA |
| **Operating bank interleave read current:** All bank interleaving reads, $I_{OUT}$ = 0mA; BL = 4, CL = CL ($I_{DD}$), AL = $^tRCD$ ($I_{DD}$) - 1 × $^tCK$ ($I_{DD}$); $^tCK = {}^tCK$ ($I_{DD}$), $^tRC = {}^tRC$ ($I_{DD}$), $^tRRD = {}^tRRD$ ($I_{DD}$), $^tRCD = {}^tRCD$ ($I_{DD}$); CKE is HIGH, CS# is HIGH between valid commands; Address bus inputs are stable during deselects; Data bus inputs are switching; See IDD7 Conditions (page 28) for details | $I_{DD7}$ | x4, x8 | 220 | 210 | 185 | mA |
| | | x16 | 270 | 260 | 230 | |

Notes:
1. $I_{DD}$ specifications are tested after the device is properly initialized. 0°C ≤ $T_C$ ≤ +85°C.
2. $V_{DD}$ = +1.8V ±0.1V, $V_{DDQ}$ = +1.8V ±0.1V, $V_{DDL}$ = +1.8V ±0.1V, $V_{REF} = V_{DDQ}/2$.
3. $I_{DD}$ parameters are specified with ODT disabled.
4. Data bus consists of DQ, DM, DQS, DQS#, RDQS, RDQS#, LDQS, LDQS#, UDQS, and UDQS#. $I_{DD}$ values must be met with all combinations of EMR bits 10 and 11.
5. Definitions for $I_{DD}$ conditions:

   **LOW** $V_{IN} \le V_{IL(AC)max}$

   **HIGH** $V_{IN} \ge V_{IH(AC)min}$

   **Stable** Inputs stable at a HIGH or LOW level

   **Floating** Inputs at $V_{REF} = V_{DDQ}/2$

   **Switching** Inputs changing between HIGH and LOW every other clock cycle (once per two clocks) for address and control signals

   **Switching** Inputs changing between HIGH and LOW every other data transfer (once per clock) for DQ signals, not including masks or strobes
6. $I_{DD1}$, $I_{DD4R}$, and $I_{DD7}$ require A12 in EMR to be enabled during testing.
7. The following $I_{DD}$ values must be derated ($I_{DD}$ limits increase) on IT-option and AT-option devices when operated outside of the range 0°C ≤ $T_C$ ≤ 85°C:

   **When $T_C$ ≤ 0°C (IT)** $I_{DD2P}$ and $I_{DD3P(SLOW)}$ must be derated by 4%; $I_{DD4R}$ and $I_{DD4W}$ must be derated by 2%; and $I_{DD6}$ and $I_{DD7}$ must be derated by 7%

   **When 85°C ≥ $T_C$ ≤ 95°C (CT)** (Extended CT Temperature) $I_{DD0}$, $I_{DD1}$, $I_{DD2N}$, $I_{DD2Q}$, $I_{DD3N}$, $I_{DD3P(FAST)}$, $I_{DD4R}$, $I_{DD4W}$, and $I_{DD5}$ must be derated by 2%; $I_{DD2P}$ must be derated by 20%; $I_{DD3P(SLOW)}$ must be derated by 30%; and $I_{DD6}$ must be derated by 80% ($I_{DD6}$ will increase by this amount if $T_C$ < 85°C and the 2X refresh option is still enabled)


Micron Technology, Inc. reserves the right to change products or specifications without notice.
© 2007 Micron Technology, Inc. All rights reserved.

# AC Timing Operating Specifications

## Table 12: AC Operating Specifications and Conditions

Not all speed grades listed may be supported for this device; refer to the title page for speeds supported; Notes: 1–5 apply to the entire table; $V_{DDQ}$ = 1.8V ±0.1V, $V_{DD}$ = 1.8V ±0.1V

| AC Characteristics | | | -187E | | -25E | | -25 | | -3E | | -3 | | -37E | | -5E | | | |
|---|---|---|---|---|---|---|---|---|---|---|---|---|---|---|---|---|---|---|
| Parameter | | Symbol | Min | Max | Min | Max | Min | Max | Min | Max | Min | Max | Min | Max | Min | Max | Units | Notes |
| Clock | Clock cycle time CL = 7 | $^tCK$ (avg) | 1.875 | 8.0 | – | – | – | – | – | – | – | – | – | – | – | – | ns | 6, 7, 8, 9 |
| | CL = 6 | $^tCK$ (avg) | 2.5 | 8.0 | 2.5 | 8.0 | 2.5 | 8.0 | – | – | – | – | – | – | – | – | | |
| | CL = 5 | $^tCK$ (avg) | 2.5 | 8.0 | 2.5 | 8.0 | 3.0 | 8.0 | 3.0 | 8.0 | 3.0 | 8.0 | – | – | – | – | | |
| | CL = 4 | $^tCK$ (avg) | 3.75 | 8.0 | 3.75 | 8.0 | 3.75 | 8.0 | 3.0 | 8.0 | 3.75 | 8.0 | 3.75 | 8.0 | 5.0 | 8.0 | | |
| | CL = 3 | $^tCK$ (avg) | 5.0 | 8.0 | 5.0 | 8.0 | 5.0 | 8.0 | 5.0 | 8.0 | 5.0 | 8.0 | 5.0 | 8.0 | 5.0 | 8.0 | | |
| | CK high-level width | $^tCH$ (avg) | 0.48 | 0.52 | 0.48 | 0.52 | 0.48 | 0.52 | 0.48 | 0.52 | 0.48 | 0.52 | 0.48 | 0.52 | 0.48 | 0.52 | $^tCK$ | 10 |
| | CK low-level width | $^tCL$ (avg) | 0.48 | 0.52 | 0.48 | 0.52 | 0.48 | 0.52 | 0.48 | 0.52 | 0.48 | 0.52 | 0.48 | 0.52 | 0.48 | 0.52 | $^tCK$ | |
| | Half clock period | $^tHP$ | MIN = lesser of $^tCH$ and $^tCL$<br>MAX = n/a | | | | | | | | | | | | | | ps | 11 |
| | Absolute $^tCK$ | $^tCK$ (abs) | MIN = $^tCK$ (AVG) MIN + $^tJITper$ (MIN)<br>MAX = $^tCK$ (AVG) MAX + $^tJITper$ (MAX) | | | | | | | | | | | | | | ps | |
| | Absolute CK high-level width | $^tCH$ (abs) | MIN = $^tCK$ (AVG) MIN × $^tCH$ (AVG) MIN + $^tJITdty$ (MIN)<br>MAX = $^tCK$ (AVG) MAX × $^tCH$ (AVG) MAX + $^tJITdty$ (MAX) | | | | | | | | | | | | | | ps | |
| | Absolute CK low-level width | $^tCL$ (abs) | MIN = $^tCK$ (AVG) MIN × $^tCL$ (AVG) MIN + $^tJITdty$ (MIN)<br>MAX = $^tCK$ (AVG) MAX × $^tCL$ (AVG) MAX + $^tJITdty$ (MAX) | | | | | | | | | | | | | | ps | |


Micron Technology, Inc. reserves the right to change products or specifications without notice.
© 2007 Micron Technology, Inc. All rights reserved.

**Table 12: AC Operating Specifications and Conditions (Continued)**

Not all speed grades listed may be supported for this device; refer to the title page for speeds supported; Notes: 1–5 apply to the entire table; $V_{DDQ}$ = 1.8V ±0.1V, $V_{DD}$ = 1.8V ±0.1V

| AC Characteristics | | | -187E | | -25E | | -25 | | -3E | | -3 | | -37E | | -5E | | | |
|---|---|---|---|---|---|---|---|---|---|---|---|---|---|---|---|---|---|---|
| | Parameter | Symbol | Min | Max | Min | Max | Min | Max | Min | Max | Min | Max | Min | Max | Min | Max | Units | Notes |
| Clock Jitter | Period jitter | $^{t}$JITper | –90 | 90 | –100 | 100 | –100 | 100 | –125 | 125 | –125 | 125 | –125 | 125 | –125 | 125 | ps | 12 |
| | Half period | $^{t}$JITdty | –75 | 75 | –100 | 100 | –100 | 100 | –125 | 125 | –125 | 125 | –125 | 125 | –150 | 150 | ps | 13 |
| | Cycle to cycle | $^{t}$JITcc | 180 | | 200 | | 200 | | 250 | | 250 | | 250 | | 250 | | ps | 14 |
| | Cumulative error, 2 cycles | $^{t}ERR_{2per}$ | –132 | 132 | –150 | 150 | –150 | 150 | –175 | 175 | –175 | 175 | –175 | 175 | –175 | 175 | ps | 15 |
| | Cumulative error, 3 cycles | $^{t}ERR_{3per}$ | –157 | 157 | –175 | 175 | –175 | 175 | –225 | 225 | –225 | 225 | –225 | 225 | –225 | 225 | ps | 15 |
| | Cumulative error, 4 cycles | $^{t}ERR_{4per}$ | –175 | 175 | –200 | 200 | –200 | 200 | –250 | 250 | –250 | 250 | –250 | 250 | –250 | 250 | ps | 15 |
| | Cumulative error, 5 cycles | $^{t}ERR_{5per}$ | –188 | 188 | –200 | 200 | –200 | 200 | –250 | 250 | –250 | 250 | –250 | 250 | –250 | 250 | ps | 15, 16 |
| | Cumulative error, 6–10 cycles | $^{t}ERR_{6–10per}$ | –250 | 250 | –300 | 300 | –300 | 300 | –350 | 350 | –350 | 350 | –350 | 350 | –350 | 350 | ps | 15, 16 |
| | Cumulative error, 11–50 cycles | $^{t}ERR_{11–50per}$ | –425 | 425 | –450 | 450 | –450 | 450 | –450 | 450 | –450 | 450 | –450 | 450 | –450 | 450 | ps | 15 |
| Data Strobe-Out | DQS output access time from CK/CK# | $^{t}$DQSCK | –300 | 300 | –350 | 350 | –350 | 350 | –400 | 400 | –400 | 400 | –450 | 450 | –500 | 500 | ps | 19 |
| | DQS read preamble | $^{t}$RPRE | MIN = 0.9 × $^{t}$CK<br>MAX = 1.1 × $^{t}$CK | | | | | | | | | | | | | | $^{t}$CK | 17, 18, 19 |
| | DQS read postamble | $^{t}$RPST | MIN = 0.4 × $^{t}$CK<br>MAX = 0.6 × $^{t}$CK | | | | | | | | | | | | | | $^{t}$CK | 17, 18, 19, 20 |
| | CK/CK# to DQS Low-Z | $^{t}LZ_{1}$ | MIN = $^{t}$AC (MIN)<br>MAX = $^{t}$AC (MAX) | | | | | | | | | | | | | | ps | 19, 21, 22 |


Micron Technology, Inc. reserves the right to change products or specifications without notice.
© 2007 Micron Technology, Inc. All rights reserved.

**Table 12: AC Operating Specifications and Conditions (Continued)**

Not all speed grades listed may be supported for this device; refer to the title page for speeds supported; Notes: 1–5 apply to the entire table; $V_{DDQ}$ = 1.8V ±0.1V, $V_{DD}$ = 1.8V ±0.1V

| AC Characteristics | | | -187E | | -25E | | -25 | | -3E | | -3 | | -37E | | -5E | | | |
|---|---|---|---|---|---|---|---|---|---|---|---|---|---|---|---|---|---|---|
| | Parameter | Symbol | Min | Max | Min | Max | Min | Max | Min | Max | Min | Max | Min | Max | Min | Max | Units | Notes |
| Data Strobe-In | DQS rising edge to CK rising edge | $^{t}$DQSS | MIN = –0.25 × $^{t}$CK<br>MAX = 0.25 × $^{t}$CK | | | | | | | | | | | | | | $^{t}$CK | 18 |
| | DQS input-high pulse width | $^{t}$DQSH | MIN = 0.35 × $^{t}$CK<br>MAX = n/a | | | | | | | | | | | | | | $^{t}$CK | 18 |
| | DQS input-low pulse width | $^{t}$DQSL | MIN = 0.35 × $^{t}$CK<br>MAX = n/a | | | | | | | | | | | | | | $^{t}$CK | 18 |
| | DQS falling to CK rising: setup time | $^{t}$DSS | MIN = 0.2 × $^{t}$CK<br>MAX = n/a | | | | | | | | | | | | | | $^{t}$CK | 18 |
| | DQS falling from CK rising: hold time | $^{t}$DSH | MIN = 0.2 × $^{t}$CK<br>MAX = n/a | | | | | | | | | | | | | | $^{t}$CK | 18 |
| | Write preamble setup time | $^{t}$WPRES | MIN = 0<br>MAX = n/a | | | | | | | | | | | | | | ps | 23, 24 |
| | DQS write preamble | $^{t}$WPRE | MIN = 0.35 × $^{t}$CK<br>MAX = n/a | | | | | | | | | | | | | | $^{t}$CK | 18 |
| | DQS write postamble | $^{t}$WPST | MIN = 0.4 × $^{t}$CK<br>MAX = 0.6 × $^{t}$CK | | | | | | | | | | | | | | $^{t}$CK | 18, 25 |
| | WRITE command to first DQS transition | – | MIN = WL - $^{t}$DQSS<br>MAX = WL + $^{t}$DQSS | | | | | | | | | | | | | | $^{t}$CK | |



Micron Technology, Inc. reserves the right to change products or specifications without notice.
© 2007 Micron Technology, Inc. All rights reserved.

CCMTD-1725822587-9658
1GbDDR2.pdf – Rev. AB 09/18 EN

**Table 12: AC Operating Specifications and Conditions (Continued)**

Not all speed grades listed may be supported for this device; refer to the title page for speeds supported; Notes: 1–5 apply to the entire table; $V_{DDQ}$ = 1.8V ±0.1V, $V_{DD}$ = 1.8V ±0.1V

| AC Characteristics | | | -187E | | -25E | | -25 | | -3E | | -3 | | -37E | | -5E | | | |
|---|---|---|---|---|---|---|---|---|---|---|---|---|---|---|---|---|---|---|
| | Parameter | Symbol | Min | Max | Min | Max | Min | Max | Min | Max | Min | Max | Min | Max | Min | Max | Units | Notes |
| Data-Out | DQ output access time from CK/CK# | $^tAC$ | –350 | 350 | –400 | 400 | –400 | 400 | –450 | 450 | –450 | 450 | –500 | 500 | –600 | 600 | ps | 19 |
| | DQS–DQ skew, DQS to last DQ valid, per group, per access | $^tDQSQ$ | – | 175 | – | 200 | – | 200 | – | 240 | – | 240 | – | 300 | – | 350 | ps | 26, 27 |
| | DQ hold from next DQS strobe | $^tQHS$ | – | 250 | – | 300 | – | 300 | – | 340 | – | 340 | – | 400 | – | 450 | ps | 28 |
| | DQ–DQS hold, DQS to first DQ not valid | $^tQH$ | MIN = $^tHP$ - $^tQHS$<br>MAX = n/a | | | | | | | | | | | | | | ps | 26, 27, 28 |
| | CK/CK# to DQ, DQS High-Z | $^tHZ$ | MIN = n/a<br>MAX = $^tAC$ (MAX) | | | | | | | | | | | | | | ps | 19, 21, 29 |
| | CK/CK# to DQ Low-Z | $^tLZ_2$ | MIN = 2 × $^tAC$ (MIN)<br>MAX = $^tAC$ (MAX) | | | | | | | | | | | | | | ps | 19, 21, 22 |
| | Data valid output window | DVW | MIN = $^tQH$ - $^tDQSQ$<br>MAX = n/a | | | | | | | | | | | | | | ns | 26, 27 |
| Data-In | DQ and DM input setup time to DQS | $^tDSb$ | 0 | – | 50 | – | 50 | – | 100 | – | 100 | – | 100 | – | 150 | – | ps | 26, 30, 31 |
| | DQ and DM input hold time to DQS | $^tDHb$ | 75 | – | 125 | – | 125 | – | 175 | – | 175 | – | 225 | – | 275 | – | ps | 26, 30, 31 |
| | DQ and DM input setup time to DQS | $^tDSa$ | 200 | – | 250 | – | 250 | – | 300 | – | 300 | – | 350 | – | 400 | – | ps | 26, 30, 31 |
| | DQ and DM input hold time to DQS | $^tDHa$ | 200 | – | 250 | – | 250 | – | 300 | – | 300 | – | 350 | – | 400 | – | ps | 26, 30, 31 |
| | DQ and DM input pulse width | $^tDIPW$ | MIN = 0.35 × $^tCK$<br>MAX = n/a | | | | | | | | | | | | | | $^tCK$ | 18, 32 |



CCMTD-1725822587-9658
1GbDDR2.pdf – Rev. AB 09/18 EN
Micron Technology, Inc. reserves the right to change products or specifications without notice.
© 2007 Micron Technology, Inc. All rights reserved.

**Table 12: AC Operating Specifications and Conditions (Continued)**

Not all speed grades listed may be supported for this device; refer to the title page for speeds supported; Notes: 1–5 apply to the entire table; $V_{DDQ}$ = 1.8V ±0.1V, $V_{DD}$ = 1.8V ±0.1V

| AC Characteristics | | | | -187E | | -25E | | -25 | | -3E | | -3 | | -37E | | -5E | | | |
|---|---|---|---|---|---|---|---|---|---|---|---|---|---|---|---|---|---|---|---|
| | Parameter | | Symbol | Min | Max | Min | Max | Min | Max | Min | Max | Min | Max | Min | Max | Min | Max | Units | Notes |
| Command and Address | Input setup time | | $^{t}$ISb | 125 | – | 175 | – | 175 | – | 200 | – | 200 | – | 250 | – | 350 | – | ps | 31, 33 |
| | Input hold time | | $^{t}$IHb | 200 | – | 250 | – | 250 | – | 275 | – | 275 | – | 375 | – | 475 | – | ps | 31, 33 |
| | Input setup time | | $^{t}$ISa | 325 | – | 375 | – | 375 | – | 400 | – | 400 | – | 500 | – | 600 | – | ps | 31, 33 |
| | Input hold time | | $^{t}$IHa | 325 | – | 375 | – | 375 | – | 400 | – | 400 | – | 500 | – | 600 | – | ps | 31, 33 |
| | Input pulse width | | $^{t}$IPW | 0.6 | – | 0.6 | – | 0.6 | – | 0.6 | – | 0.6 | – | 0.6 | – | 0.6 | – | $^{t}$CK | 18, 32 |
| | ACTIVATE-to-ACTIVATE delay, same bank | | $^{t}$RC | 54 | – | 55 | – | 55 | – | 54 | – | 55 | – | 55 | – | 55 | – | ns | 18, 34, 51 |
| | ACTIVATE-to-READ or WRITE delay | | $^{t}$RCD | 13.125 | – | 12.5 | – | 15 | – | 12 | – | 15 | – | 15 | – | 15 | – | ns | 18 |
| | ACTIVATE-to-PRECHARGE delay | | $^{t}$RAS | 40 | 70K | 40 | 70K | 40 | 70K | 40 | 70K | 40 | 70K | 40 | 70K | 40 | 70K | ns | 18, 34, 35 |
| | PRECHARGE period | | $^{t}$RP | 13.125 | – | 12.5 | – | 15 | – | 12 | – | 15 | – | 15 | – | 15 | – | ns | 18, 36 |
| | PRE-CHARGE ALL period | <1Gb | $^{t}$RPA | 13.125 | – | 12.5 | – | 15 | – | 12 | – | 15 | – | 15 | – | 15 | – | ns | 18, 36 |
| | | ≥1Gb | $^{t}$RPA | 15 | – | 15 | – | 17.5 | | 15 | | 18 | | 18.75 | | 20 | | ns | 18, 36 |
| | ACTIVATE-to-ACTIVATE delay different bank | x4, x8 | $^{t}$RRD | 7.5 | – | 7.5 | – | 7.5 | – | 7.5 | – | 7.5 | – | 7.5 | – | 7.5 | – | ns | 18, 37 |
| | | x16 | $^{t}$RRD | 10 | – | 10 | – | 10 | – | 10 | – | 10 | – | 10 | – | 10 | – | ns | 18, 37 |
| | 4-bank activate period (≥1Gb) | x4, x8 | $^{t}$FAW | 35 | – | 35 | – | 35 | – | 37.5 | – | 37.5 | – | 37.5 | – | 37.5 | – | ns | 18, 38 |
| | | x16 | $^{t}$FAW | 45 | – | 45 | – | 45 | – | 50 | – | 50 | – | 50 | – | 50 | – | ns | 18, 38 |


Micron Technology, Inc. reserves the right to change products or specifications without notice.
© 2007 Micron Technology, Inc. All rights reserved.

**Table 12: AC Operating Specifications and Conditions (Continued)**

Not all speed grades listed may be supported for this device; refer to the title page for speeds supported; Notes: 1–5 apply to the entire table; $V_{DDQ}$ = 1.8V ±0.1V, $V_{DD}$ = 1.8V ±0.1V

| AC Characteristics | | | | -187E | | -25E | | -25 | | -3E | | -3 | | -37E | | -5E | | | |
|---|---|---|---|---|---|---|---|---|---|---|---|---|---|---|---|---|---|---|---|
| | Parameter | | Symbol | Min | Max | Min | Max | Min | Max | Min | Max | Min | Max | Min | Max | Min | Max | Units | Notes |
| Command and Address | Internal READ-to-PRECHARGE delay | | $^tRTP$ | 7.5 | – | 7.5 | – | 7.5 | – | 7.5 | – | 7.5 | – | 7.5 | – | 7.5 | – | ns | 18, 37, 39 |
| Command and Address | CAS#-to-CAS# delay | | $^tCCD$ | 2 | – | 2 | – | 2 | – | 2 | – | 2 | – | 2 | – | 2 | – | $^tCK$ | 18 |
| Command and Address | Write recovery time | | $^tWR$ | 15 | – | 15 | – | 15 | – | 15 | – | 15 | – | 15 | – | 15 | – | ns | 18, 37 |
| Command and Address | Write AP recovery + precharge time | | $^tDAL$ | $^tWR$ + $^tRP$ | – | $^tWR$ + $^tRP$ | – | $^tWR$ + $^tRP$ | – | $^tWR$ + $^tRP$ | – | $^tWR$ + $^tRP$ | – | $^tWR$ + $^tRP$ | – | $^tWR$ + $^tRP$ | – | ns | 40 |
| Command and Address | Internal WRITE-to-READ delay | | $^tWTR$ | 7.5 | – | 7.5 | – | 7.5 | – | 7.5 | – | 7.5 | – | 7.5 | – | 10 | – | ns | 18, 37 |
| Command and Address | LOAD MODE cycle time | | $^tMRD$ | 2 | – | 2 | – | 2 | – | 2 | – | 2 | – | 2 | – | 2 | – | $^tCK$ | 18 |
| Refresh | REFRESH-to-ACTIVATE or to -REFRESH interval | 256Mb | $^tRFC$ | 75 | – | 75 | – | 75 | – | 75 | – | 75 | – | 75 | – | 75 | – | ns | 18, 41 |
| Refresh | REFRESH-to-ACTIVATE or to -REFRESH interval | 512Mb | $^tRFC$ | 105 | – | 105 | – | 105 | – | 105 | – | 105 | – | 105 | – | 105 | – | ns | 18, 41 |
| Refresh | REFRESH-to-ACTIVATE or to -REFRESH interval | 1Gb | $^tRFC$ | 127.5 | – | 127.5 | – | 127.5 | – | 127.5 | – | 127.5 | – | 127.5 | – | 127.5 | – | ns | 18, 41 |
| Refresh | REFRESH-to-ACTIVATE or to -REFRESH interval | 2Gb | $^tRFC$ | 195 | – | 195 | – | 195 | – | 195 | – | 195 | – | 195 | – | 195 | – | ns | 18, 41 |
| Refresh | Average periodic refresh (commercial) | | $^tREFI$ | – | 7.8 | – | 7.8 | – | 7.8 | – | 7.8 | – | 7.8 | – | 7.8 | – | 7.8 | µs | 18, 41 |
| Refresh | Average periodic refresh (industrial) | | $^tREFI_{IT}$ | – | 3.9 | – | 3.9 | – | 3.9 | – | 3.9 | – | 3.9 | – | 3.9 | – | 3.9 | µs | 18, 41 |
| Refresh | Average periodic refresh (automotive) | | $^tREFI_{AT}$ | – | 3.9 | – | 3.9 | – | 3.9 | – | 3.9 | – | 3.9 | – | 3.9 | – | 3.9 | µs | 18, 41 |
| Refresh | CKE LOW to CK, CK# uncertainty | | $^tDELAY$ | MIN limit = $^tIS$ + $^tCK$ + $^tIH$<br>MAX limit = n/a | | | | | | | | | | | | | | ns | 42 |



Micron Technology, Inc. reserves the right to change products or specifications without notice.
© 2007 Micron Technology, Inc. All rights reserved.

CCMTD-1725822587-9658
1GbDDR2.pdf – Rev. AB 09/18 EN

**Table 12: AC Operating Specifications and Conditions (Continued)**

Not all speed grades listed may be supported for this device; refer to the title page for speeds supported; Notes: 1–5 apply to the entire table; $V_{DDQ}$ = 1.8V ±0.1V, $V_{DD}$ = 1.8V ±0.1V

| AC Characteristics | | | | -187E | | -25E | | -25 | | -3E | | -3 | | -37E | | -5E | | | |
|---|---|---|---|---|---|---|---|---|---|---|---|---|---|---|---|---|---|---|---|
| Parameter | | | Symbol | Min | Max | Min | Max | Min | Max | Min | Max | Min | Max | Min | Max | Min | Max | Units | Notes |
| Self Refresh | Exit SELF REFRESH to nonREAD command | | $^tXSNR$ | MIN limit = $^tRFC$ (MIN) + 10<br>MAX limit = n/a | | | | | | | | | | | | | | ns | |
| | Exit SELF REFRESH to READ command | | $^tXSRD$ | MIN limit = 200<br>MAX limit = n/a | | | | | | | | | | | | | | $^tCK$ | 18 |
| | Exit SELF REFRESH timing reference | | $^tISXR$ | MIN limit = $^tIS$<br>MAX limit = n/a | | | | | | | | | | | | | | ps | 33, 43 |
| Power-Down | Exit active power-down to READ command | MR12 = 0 | $^tXARD$ | 3 | – | 2 | – | 2 | – | 2 | – | 2 | – | 2 | – | 2 | – | $^tCK$ | 18 |
| | | MR12 = 1 | | 10 - AL | – | 8 - AL | – | 8 - AL | – | 7 - AL | – | 7 - AL | – | 6 - AL | – | 6 - AL | – | $^tCK$ | 18 |
| | Exit precharge power-down and active power-down to any nonREAD command | | $^tXP$ | 3 | – | 2 | – | 2 | – | 2 | – | 2 | – | 2 | – | 2 | – | $^tCK$ | 18 |
| | CKE MIN HIGH/LOW time | | $^tCKE$ | MIN = 3<br>MAX = n/a | | | | | | | | | | | | | | $^tCK$ | 18, 44 |



CCMTD-1725822587-9658
1GbDDR2.pdf – Rev. AB 09/18 EN
Micron Technology, Inc. reserves the right to change products or specifications without notice.
© 2007 Micron Technology, Inc. All rights reserved.

**Table 12: AC Operating Specifications and Conditions (Continued)**

Not all speed grades listed may be supported for this device; refer to the title page for speeds supported; Notes: 1–5 apply to the entire table; $V_{DDQ}$ = 1.8V ±0.1V, $V_{DD}$ = 1.8V ±0.1V

| AC Characteristics | | | -187E | | -25E | | -25 | | -3E | | -3 | | -37E | | -5E | | | |
|---|---|---|---|---|---|---|---|---|---|---|---|---|---|---|---|---|---|---|
| | Parameter | Symbol | Min | Max | Min | Max | Min | Max | Min | Max | Min | Max | Min | Max | Min | Max | Units | Notes |
| ODT | ODT to power-down entry latency | $^tANPD$ | 4 | – | 3 | – | 3 | – | 3 | – | 3 | – | 3 | – | 3 | – | $^tCK$ | 18 |
| ODT | ODT power-down exit latency | $^tAXPD$ | 11 | – | 8 | – | 8 | – | 8 | – | 8 | – | 8 | – | 8 | – | $^tCK$ | 18 |
| ODT | ODT turn-on delay | $^tAOND$ | 2 | | | | | | | | | | | | | | $^tCK$ | 18 |
| ODT | ODT turn-off delay | $^tAOFD$ | 2.5 | | | | | | | | | | | | | | $^tCK$ | 18, 45 |
| ODT | ODT turn-on | $^tAON$ | $^tAC$ (MIN) | $^tAC$ (MAX) + 2575 | MIN = $^tAC$ (MIN) MAX = $^tAC$ (MAX) + 600 | | | | MIN = $^tAC$ (MIN) MAX = $^tAC$ (MAX) + 700 | | | | MIN = $^tAC$ (MIN) MAX = $^tAC$ (MAX) + 1000 | | | | ps | 19, 46 |
| ODT | ODT turn-off | $^tAOF$ | MIN = $^tAC$ (MIN) MAX = $^tAC$ (MAX) + 600 | | | | | | | | | | | | | | ps | 47, 48 |
| ODT | ODT turn-on (power-down mode) | $^tAONPD$ | $^tAC$ (MIN) + 2000 | 2 × $^tCK$ + $^tAC$ (MAX) + 1000 | MIN = $^tAC$ (MIN) + 2000 MAX = 2 × $^tCK$ + $^tAC$ (MAX) + 1000 | | | | | | | | | | | | ps | 49 |
| ODT | ODT turn-off (power-down mode) | $^tAOFPD$ | MIN = $^tAC$ (MIN) + 2000 MAX = 2.5 × $^tCK$ + $^tAC$ (MAX) + 1000 | | | | | | | | | | | | | | ps | |
| ODT | ODT enable from MRS command | $^tMOD$ | MIN = 12 MAX = n/a | | | | | | | | | | | | | | ns | 18, 50 |


Micron Technology, Inc. reserves the right to change products or specifications without notice.
© 2007 Micron Technology, Inc. All rights reserved.

Notes:

1. All voltages are referenced to $V_{SS}$.
2. Tests for AC timing, $I_{DD}$, and electrical AC and DC characteristics may be conducted at nominal reference/supply voltage levels, but the related specifications and the operation of the device are warranted for the full voltage range specified. ODT is disabled for all measurements that are not ODT-specific.
3. Outputs measured with equivalent load (see Figure 16 (page 52)).
4. AC timing and $I_{DD}$ tests may use a $V_{IL}$-to-$V_{IH}$ swing of up to 1.0V in the test environment, and parameter specifications are guaranteed for the specified AC input levels under normal use conditions. The slew rate for the input signals used to test the device is 1.0 V/ns for signals in the range between $V_{IL(AC)}$ and $V_{IH(AC)}$. Slew rates other than 1.0 V/ns may require the timing parameters to be derated as specified.
5. The AC and DC input level specifications are as defined in the SSTL_18 standard (that is, the receiver will effectively switch as a result of the signal crossing the AC input level and will remain in that state as long as the signal does not ring back above [below] the DC input LOW [HIGH] level).
6. CK and CK# input slew rate is referenced at 1 V/ns (2 V/ns if measured differentially).
7. Operating frequency is only allowed to change during self refresh mode (see Figure 79 (page 131)), precharge power-down mode, or system reset condition (see Reset (page 132)). SSC allows for small deviations in operating frequency, provided the SSC guidelines are satisfied.
8. The clock's $^{t}$CK (AVG) is the average clock over any 200 consecutive clocks and $^{t}$CK (AVG) MIN is the smallest clock rate allowed (except for a deviation due to allowed clock jitter). Input clock jitter is allowed provided it does not exceed values specified. Also, the jitter must be of a random Gaussian distribution in nature.
9. Spread spectrum is not included in the jitter specification values. However, the input clock can accommodate spread spectrum at a sweep rate in the range 8–60 kHz with an additional one percent $^{t}$CK (AVG); however, the spread spectrum may not use a clock rate below $^{t}$CK (AVG) MIN or above $^{t}$CK (AVG) MAX.
10. MIN ($^{t}$CL, $^{t}$CH) refers to the smaller of the actual clock LOW time and the actual clock HIGH time driven to the device. The clock's half period must also be of a Gaussian distribution; $^{t}$CH (AVG) and $^{t}$CL (AVG) must be met with or without clock jitter and with or without duty cycle jitter. $^{t}$CH (AVG) and $^{t}$CL (AVG) are the average of any 200 consecutive CK falling edges. $^{t}$CH limits may be exceeded if the duty cycle jitter is small enough that the absolute half period limits ($^{t}$CH [ABS], $^{t}$CL [ABS]) are not violated.
11. $^{t}$HP (MIN) is the lesser of $^{t}$CL and $^{t}$CH actually applied to the device CK and CK# inputs; thus, $^{t}$HP (MIN) ≥ the lesser of $^{t}$CL (ABS) MIN and $^{t}$CH (ABS) MIN.
12. The period jitter ($^{t}$JITper) is the maximum deviation in the clock period from the average or nominal clock allowed in either the positive or negative direction. JEDEC specifies tighter jitter numbers during DLL locking time. During DLL lock time, the jitter values should be 20 percent less those than noted in the table (DLL locked).
13. The half-period jitter ($^{t}$JITdty) applies to either the high pulse of clock or the low pulse of clock; however, the two cumulatively can not exceed $^{t}$JITper.
14. The cycle-to-cycle jitter ($^{t}$JITcc) is the amount the clock period can deviate from one cycle to the next. JEDEC specifies tighter jitter numbers during DLL locking time. During DLL lock time, the jitter values should be 20 percent less than those noted in the table (DLL locked).
15. The cumulative jitter error ($^{t}ERR_{nper}$), where *n* is 2, 3, 4, 5, 6–10, or 11–50 is the amount of clock time allowed to consecutively accumulate away from the average clock over any number of clock cycles.
16. JEDEC specifies using $^{t}ERR_{6-10per}$ when derating clock-related output timing (see notes 19 and 48). Micron requires less derating by allowing $^{t}ERR_{5per}$ to be used.
17. This parameter is not referenced to a specific voltage level but is specified when the device output is no longer driving ($^{t}$RPST) or beginning to drive ($^{t}$RPRE).


Micron Technology, Inc. reserves the right to change products or specifications without notice.
© 2007 Micron Technology, Inc. All rights reserved.

18. The inputs to the DRAM must be aligned to the associated clock, that is, the actual clock that latches it in. However, the input timing (in ns) references to the $^{t}$CK (AVG) when determining the required number of clocks. The following input parameters are determined by taking the specified percentage times the $^{t}$CK (AVG) rather than $^{t}$CK: $^{t}$IPW, $^{t}$DIPW, $^{t}$DQSS, $^{t}$DQSH, $^{t}$DQSL, $^{t}$DSS, $^{t}$DSH, $^{t}$WPST, and $^{t}$WPRE.
19. The DRAM output timing is aligned to the nominal or average clock. Most output parameters must be derated by the actual jitter error when input clock jitter is present; this will result in each parameter becoming larger. The following parameters are required to be derated by subtracting $^{t}ERR_{5per}$ (MAX): $^{t}$AC (MIN), $^{t}$DQSCK (MIN), $^{t}LZ_{DQS}$ (MIN), $^{t}LZ_{DQ}$ (MIN), $^{t}$AON (MIN); while the following parameters are required to be derated by subtracting $^{t}ERR_{5per}$ (MIN): $^{t}$AC (MAX), $^{t}$DQSCK (MAX), $^{t}$HZ (MAX), $^{t}LZ_{DQS}$ (MAX), $^{t}LZ_{DQ}$ (MAX), $^{t}$AON (MAX). The parameter $^{t}$RPRE (MIN) is derated by subtracting $^{t}$JITper (MAX), while $^{t}$RPRE (MAX), is derated by subtracting $^{t}$JITper (MIN). The parameter $^{t}$RPST (MIN) is derated by subtracting $^{t}$JITdty (MAX), while $^{t}$RPST (MAX), is derated by subtracting $^{t}$JITdty (MIN). Output timings that require $^{t}ERR_{5per}$ derating can be observed to have offsets relative to the clock; however, the total window will not degrade.
20. When DQS is used single-ended, the minimum limit is reduced by 100ps.
21. $^{t}$HZ and $^{t}$LZ transitions occur in the same access time windows as valid data transitions. These parameters are not referenced to a specific voltage level, but specify when the device output is no longer driving ($^{t}$HZ) or begins driving ($^{t}$LZ).
22. $^{t}$LZ (MIN) will prevail over a $^{t}$DQSCK (MIN) + $^{t}$RPRE (MAX) condition.
23. This is not a device limit. The device will operate with a negative value, but system performance could be degraded due to bus turnaround.
24. It is recommended that DQS be valid (HIGH or LOW) on or before the WRITE command. The case shown (DQS going from High-Z to logic LOW) applies when no WRITEs were previously in progress on the bus. If a previous WRITE was in progress, DQS could be HIGH during this time, depending on $^{t}$DQSS.
25. The intent of the "Don't Care" state after completion of the postamble is that the DQS-driven signal should either be HIGH, LOW, or High-Z, and that any signal transition within the input switching region must follow valid input requirements. That is, if DQS transitions HIGH (above $V_{IH[DC]min}$), then it must not transition LOW (below $V_{IH[DC]}$) prior to $^{t}$DQSH (MIN).
26. Referenced to each output group: x4 = DQS with DQ[3:0]; x8 = DQS with DQ[7:0]; x16 = LDQS with DQ[7:0]; and UDQS with DQ[15:8].
27. The data valid window is derived by achieving other specifications: $^{t}$HP ($^{t}$CK/2), $^{t}$DQSQ, and $^{t}$QH ($^{t}$QH = $^{t}$HP - $^{t}$QHS). The data valid window derates in direct proportion to the clock duty cycle and a practical data valid window can be derived.
28. $^{t}$QH = $^{t}$HP - $^{t}$QHS; the worst case $^{t}$QH would be the lesser of $^{t}$CL (ABS) MAX or $^{t}$CH (ABS) MAX times $^{t}$CK (ABS) MIN - $^{t}$QHS. Minimizing the amount of $^{t}$CH (AVG) offset and value of $^{t}$JITdty will provide a larger $^{t}$QH, which in turn will provide a larger valid data out window.
29. This maximum value is derived from the referenced test load. $^{t}$HZ (MAX) will prevail over $^{t}$DQSCK (MAX) + $^{t}$RPST (MAX) condition.
30. The values listed are for the differential DQS strobe (DQS and DQS#) with a differential slew rate of 2 V/ns (1 V/ns for each signal). There are two sets of values listed: $^{t}DS_a$, $^{t}DH_a$ and $^{t}DS_b$, $^{t}DH_b$. The $^{t}DS_a$, $^{t}DH_a$ values (for reference only) are equivalent to the baseline values of $^{t}DS_b$, $^{t}DH_b$ at $V_{REF}$ when the slew rate is 2 V/ns, differentially. The baseline values, $^{t}DS_b$, $^{t}DH_b$, are the JEDEC-defined values, referenced from the logic trip points. $^{t}DS_b$ is referenced from $V_{IH(AC)}$ for a rising signal and $V_{IL(AC)}$ for a falling signal, while $^{t}DH_b$ is referenced from $V_{IL(DC)}$ for a rising signal and $V_{IH(DC)}$ for a falling signal. If the differential DQS slew rate is not equal to 2 V/ns, then the baseline values must be derated by adding the values from Table 31 (page 65) and Table 32 (page 67). If the DQS differential


Micron Technology, Inc. reserves the right to change products or specifications without notice.
© 2007 Micron Technology, Inc. All rights reserved.

strobe feature is not enabled, then the DQS strobe is single-ended and the baseline values must be derated using Table 33 (page 68). Single-ended DQS data timing is referenced at DQS crossing $V_{REF}$. The correct timing values for a single-ended DQS strobe are listed in Table 34 (page 68)–Table 36 (page 69) on Table 34 (page 68), Table 35 (page 69), and Table 36 (page 69); listed values are already derated for slew rate variations and converted from baseline values to $V_{REF}$ values.

31. $V_{IL}/V_{IH}$ DDR2 overshoot/undershoot. See AC Overshoot/Undershoot Specification (page 58).
32. For each input signal—not the group collectively.
33. There are two sets of values listed for command/address: $^tIS_a$, $^tIH_a$ and $^tIS_b$, $^tIH_b$. The $^tIS_a$, $^tIH_a$ values (for reference only) are equivalent to the baseline values of $^tIS_b$, $^tIH_b$ at $V_{REF}$ when the slew rate is 1 V/ns. The baseline values, $^tIS_b$, $^tIH_b$, are the JEDEC-defined values, referenced from the logic trip points. $^tIS_b$ is referenced from $V_{IH(AC)}$ for a rising signal and $V_{IL(AC)}$ for a falling signal, while $^tIH_b$ is referenced from $V_{IL(DC)}$ for a rising signal and $V_{IH(DC)}$ for a falling signal. If the command/address slew rate is not equal to 1 V/ns, then the baseline values must be derated by adding the values from Table 29 (page 61) and Table 30 (page 62).
34. This is applicable to READ cycles only. WRITE cycles generally require additional time due to $^tWR$ during auto precharge.
35. READs and WRITEs with auto precharge *are* allowed to be issued before $^tRAS$ (MIN) is satisfied because $^tRAS$ lockout feature is supported in DDR2 SDRAM.
36. When a single-bank PRECHARGE command is issued, $^tRP$ timing applies. $^tRPA$ timing applies when the PRECHARGE (ALL) command is issued, regardless of the number of banks open. For 8-bank devices (≥1Gb), $^tRPA$ (MIN) = $^tRP$ (MIN) + $^tCK$ (AVG) (Table 12 (page 34) lists $^tRP$ [MIN] + $^tCK$ [AVG] MIN).
37. This parameter has a two clock minimum requirement at any $^tCK$.
38. The $^tFAW$ (MIN) parameter applies to all 8-bank DDR2 devices. No more than four bank-ACTIVATE commands may be issued in a given $^tFAW$ (MIN) period. $^tRRD$ (MIN) restriction still applies.
39. The minimum internal READ-to-PRECHARGE time. This is the time from which the last 4-bit prefetch begins to when the PRECHARGE command can be issued. A 4-bit prefetch is when the READ command internally latches the READ so that data will output CL later. This parameter is only applicable when $^tRTP/(2 \times {}^tCK) > 1$, such as frequencies faster than 533 MHz when $^tRTP$ = 7.5ns. If $^tRTP/(2 \times {}^tCK) \leq 1$, then equation AL + BL/2 applies. $^tRAS$ (MIN) has to be satisfied as well. The DDR2 SDRAM will automatically delay the internal PRECHARGE command until $^tRAS$ (MIN) has been satisfied.
40. $^tDAL = (nWR) + ({}^tRP/{}^tCK)$. Each of these terms, if not already an integer, should be rounded up to the next integer. $^tCK$ refers to the application clock period; *n*WR refers to the $^tWR$ parameter stored in the MR9–MR11. For example, -37E at $^tCK$ = 3.75ns with $^tWR$ programmed to four clocks would have $^tDAL$ = 4 + (15ns/3.75ns) clocks = 4 + (4) clocks = 8 clocks.
41. The refresh period is 64ms (commercial) or 32ms (industrial and automotive). This equates to an average refresh rate of 7.8125µs (commercial) or 3.9607µs (industrial and automotive). To ensure all rows of all banks are properly refreshed, 8192 REFRESH commands must be issued every 64ms (commercial) or 32ms (industrial and automotive). The JEDEC $^tRFC$ MAX of 70,000ns is not required as bursting of AUTO REFRESH commands is allowed.
42. $^tDELAY$ is calculated from $^tIS + {}^tCK + {}^tIH$ so that CKE registration LOW is guaranteed prior to CK, CK# being removed in a system RESET condition (see Reset (page 132)).
43. $^tISXR$ is equal to $^tIS$ and is used for CKE setup time during self refresh exit, as shown in Figure 69 (page 123).
44. $^tCKE$ (MIN) of three clocks means CKE must be registered on three consecutive positive clock edges. CKE must remain at the valid input level the entire time it takes to achieve the three clocks of registration. Thus, after any CKE transition, CKE may not transition from its valid level during the time period of $^tIS + 2 \times {}^tCK + {}^tIH$.


Micron Technology, Inc. reserves the right to change products or specifications without notice.
© 2007 Micron Technology, Inc. All rights reserved.

45. The half-clock of $^{t}$AOFD's 2.5 $^{t}$CK assumes a 50/50 clock duty cycle. This half-clock value must be derated by the amount of half-clock duty cycle error. For example, if the clock duty cycle was 47/53, $^{t}$AOFD would actually be 2.5 - 0.03, or 2.47, for $^{t}$AOF (MIN) and 2.5 + 0.03, or 2.53, for $^{t}$AOF (MAX).
46. ODT turn-on time $^{t}$AON (MIN) is when the device leaves High-Z and ODT resistance begins to turn on. ODT turn-on time $^{t}$AON (MAX) is when the ODT resistance is fully on. Both are measured from $^{t}$AOND.
47. ODT turn-off time $^{t}$AOF (MIN) is when the device starts to turn off ODT resistance. ODT turn off time $^{t}$AOF (MAX) is when the bus is in High-Z. Both are measured from $^{t}$AOFD.
48. Half-clock output parameters must be derated by the actual $^{t}ERR_{5per}$ and $^{t}$JITdty when input clock jitter is present; this will result in each parameter becoming larger. The parameter $^{t}$AOF (MIN) is required to be derated by subtracting both $^{t}ERR_{5per}$ (MAX) and $^{t}$JITdty (MAX). The parameter $^{t}$AOF (MAX) is required to be derated by subtracting both $^{t}ERR_{5per}$ (MIN) and $^{t}$JITdty (MIN).
49. The -187E maximum limit is 2 × $^{t}$CK + $^{t}$AC (MAX) + 1000 but it will likely be 3 x $^{t}$CK + $^{t}$AC (MAX) + 1000 in the future.
50. Should use 8 $^{t}$CK for backward compatibility.
51. DRAM devices should be evenly addressed when being accessed. Disproportionate accesses to a particular row address may result in reduction of the product lifetime.


Micron Technology, Inc. reserves the right to change products or specifications without notice.
© 2007 Micron Technology, Inc. All rights reserved.

# AC and DC Operating Conditions

### Table 13: Recommended DC Operating Conditions (SSTL_18)

All voltages referenced to $V_{SS}$

| Parameter | Symbol | Min | Nom | Max | Units | Notes |
|---|---|---|---|---|---|---|
| Supply voltage | $V_{DD}$ | 1.7 | 1.8 | 1.9 | V | 1, 2 |
| $V_{DDL}$ supply voltage | $V_{DDL}$ | 1.7 | 1.8 | 1.9 | V | 2, 3 |
| I/O supply voltage | $V_{DDQ}$ | 1.7 | 1.8 | 1.9 | V | 2, 3 |
| I/O reference voltage | $V_{REF(DC)}$ | 0.49 × $V_{DDQ}$ | 0.50 × $V_{DDQ}$ | 0.51 × $V_{DDQ}$ | V | 4 |
| I/O termination voltage (system) | $V_{TT}$ | $V_{REF(DC)}$ - 40 | $V_{REF(DC)}$ | $V_{REF(DC)}$ + 40 | mV | 5 |

Notes:
1. $V_{DD}$ and $V_{DDQ}$ must track each other. $V_{DDQ}$ must be ≤ $V_{DD}$.
2. $V_{SSQ} = V_{SSL} = V_{SS}$.
3. $V_{DDQ}$ tracks with $V_{DD}$; $V_{DDL}$ tracks with $V_{DD}$.
4. $V_{REF}$ is expected to equal $V_{DDQ}/2$ of the transmitting device and to track variations in the DC level of the same. Peak-to-peak noise (noncommon mode) on $V_{REF}$ may not exceed ±1 percent of the DC value. Peak-to-peak AC noise on $V_{REF}$ may not exceed ±2 percent of $V_{REF(DC)}$. This measurement is to be taken at the nearest $V_{REF}$ bypass capacitor.
5. $V_{TT}$ is not applied directly to the device. $V_{TT}$ is a system supply for signal termination resistors, is expected to be set equal to $V_{REF}$, and must track variations in the DC level of $V_{REF}$.


Micron Technology, Inc. reserves the right to change products or specifications without notice.
© 2007 Micron Technology, Inc. All rights reserved.

# ODT DC Electrical Characteristics

### Table 14: ODT DC Electrical Characteristics

All voltages are referenced to $V_{SS}$

| Parameter | Symbol | Min | Nom | Max | Units | Notes |
|---|---|---|---|---|---|---|
| $R_{TT}$ effective impedance value for 75Ω setting<br>EMR (A6, A2) = 0, 1 | $R_{TT1(EFF)}$ | 60 | 75 | 90 | Ω | 1, 2 |
| $R_{TT}$ effective impedance value for 150Ω setting<br>EMR (A6, A2) = 1, 0 | $R_{TT2(EFF)}$ | 120 | 150 | 180 | Ω | 1, 2 |
| $R_{TT}$ effective impedance value for 50Ω setting<br>EMR (A6, A2) = 1, 1 | $R_{TT3(EFF)}$ | 40 | 50 | 60 | Ω | 1, 2 |
| Deviation of VM with respect to $V_{DDQ}/2$ | ΔVM | –6 | – | 6 | % | 3 |

Notes:

1. $R_{TT1(EFF)}$ and $R_{TT2(EFF)}$ are determined by separately applying $V_{IH(AC)}$ and $V_{IL(DC)}$ to the ball being tested, and then measuring current, $I(V_{IH[AC]})$, and $I(V_{IL[AC]})$, respectively.

$$R_{TT(EFF)} = \frac{V_{IH(AC)} - V_{IL(AC)}}{I(V_{IH(AC)}) - I(V_{IL(AC)})}$$

2. Minimum IT and AT device values are derated by six percent less when the devices operate between –40°C and 0°C ($T_C$).
3. Measure voltage (VM) at tested ball with no load.

$$\Delta VM = \left(\frac{2 \times VM}{V_{DD}Q} - 1\right) \times 100$$


Micron Technology, Inc. reserves the right to change products or specifications without notice.
© 2007 Micron Technology, Inc. All rights reserved.

# Input Electrical Characteristics and Operating Conditions

### Table 15: Input DC Logic Levels

All voltages are referenced to $V_{SS}$

| Parameter | Symbol | Min | Max | Units |
|---|---|---|---|---|
| Input high (logic 1) voltage | $V_{IH(DC)}$ | $V_{REF(DC)}$ + 125 | $V_{DDQ}$[1] | mV |
| Input low (logic 0) voltage | $V_{IL(DC)}$ | –300 | $V_{REF(DC)}$ - 125 | mV |

Note: 1. $V_{DDQ}$ + 300mV allowed provided 1.9V is not exceeded.

### Table 16: Input AC Logic Levels

All voltages are referenced to $V_{SS}$

| Parameter | Symbol | Min | Max | Units |
|---|---|---|---|---|
| Input high (logic 1) voltage (-37E/-5E) | $V_{IH(AC)}$ | $V_{REF(DC)}$ + 250 | $V_{DDQ}$[1] | mV |
| Input high (logic 1) voltage (-187E/-25E/-25/-3E/-3) | $V_{IH(AC)}$ | $V_{REF(DC)}$ + 200 | $V_{DDQ}$[1] | mV |
| Input low (logic 0) voltage (-37E/-5E) | $V_{IL(AC)}$ | –300 | $V_{REF(DC)}$ - 250 | mV |
| Input low (logic 0) voltage (-187E/-25E/-25/-3E/-3) | $V_{IL(AC)}$ | –300 | $V_{REF(DC)}$ - 200 | mV |

Note: 1. Refer to AC Overshoot/Undershoot Specification (page 58).

### Figure 13: Single-Ended Input Signal Levels

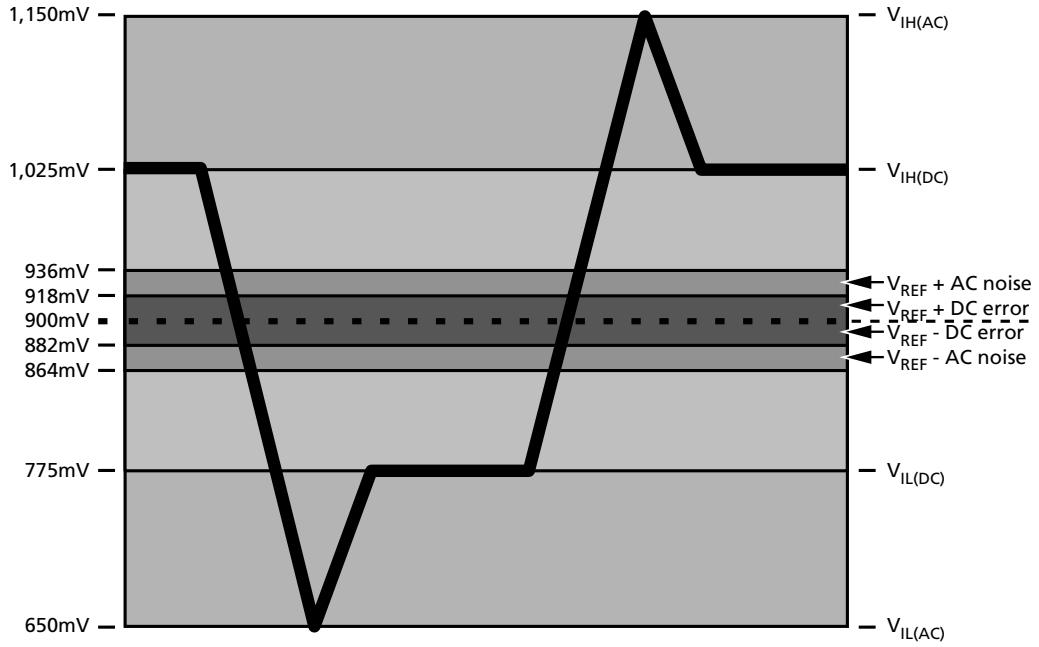


Note: 1. Numbers in diagram reflect nominal DDR2-400/DDR2-533 values.


Micron Technology, Inc. reserves the right to change products or specifications without notice.
© 2007 Micron Technology, Inc. All rights reserved.

**Table 17: Differential Input Logic Levels**

All voltages referenced to $V_{SS}$

| Parameter | Symbol | Min | Max | Units | Notes |
|---|---|---|---|---|---|
| DC input signal voltage | $V_{IN(DC)}$ | –300 | $V_{DDQ}$ | mV | 1, 6 |
| DC differential input voltage | $V_{ID(DC)}$ | 250 | $V_{DDQ}$ | mV | 2, 6 |
| AC differential input voltage | $V_{ID(AC)}$ | 500 | $V_{DDQ}$ | mV | 3, 6 |
| AC differential cross-point voltage | $V_{IX(AC)}$ | $0.50 \times V_{DDQ} - 175$ | $0.50 \times V_{DDQ} + 175$ | mV | 4 |
| Input midpoint voltage | $V_{MP(DC)}$ | 850 | 950 | mV | 5 |

Notes:
1. $V_{IN(DC)}$ specifies the allowable DC execution of each input of differential pair such as CK, CK#, DQS, DQS#, LDQS, LDQS#, UDQS, UDQS#, and RDQS, RDQS#.
2. $V_{ID(DC)}$ specifies the input differential voltage $|V_{TR} - V_{CP}|$ required for switching, where $V_{TR}$ is the true input (such as CK, DQS, LDQS, UDQS) level and $V_{CP}$ is the complementary input (such as CK#, DQS#, LDQS#, UDQS#) level. The minimum value is equal to $V_{IH(DC)} - V_{IL(DC)}$. Differential input signal levels are shown in Figure 14.
3. $V_{ID(AC)}$ specifies the input differential voltage $|V_{TR} - V_{CP}|$ required for switching, where $V_{TR}$ is the true input (such as CK, DQS, LDQS, UDQS, RDQS) level and $V_{CP}$ is the complementary input (such as CK#, DQS#, LDQS#, UDQS#, RDQS#) level. The minimum value is equal to $V_{IH(AC)} - V_{IL(AC)}$, as shown in Table 16 (page 48).
4. The typical value of $V_{IX(AC)}$ is expected to be about $0.5 \times V_{DDQ}$ of the transmitting device and $V_{IX(AC)}$ is expected to track variations in $V_{DDQ}$. $V_{IX(AC)}$ indicates the voltage at which differential input signals must cross, as shown in Figure 14.
5. $V_{MP(DC)}$ specifies the input differential common mode voltage $(V_{TR} + V_{CP})/2$ where $V_{TR}$ is the true input (CK, DQS) level and $V_{CP}$ is the complementary input (CK#, DQS#). $V_{MP(DC)}$ is expected to be approximately $0.5 \times V_{DDQ}$.
6. $V_{DDQ}$ + 300mV allowed provided 1.9V is not exceeded.

**Figure 14: Differential Input Signal Levels**

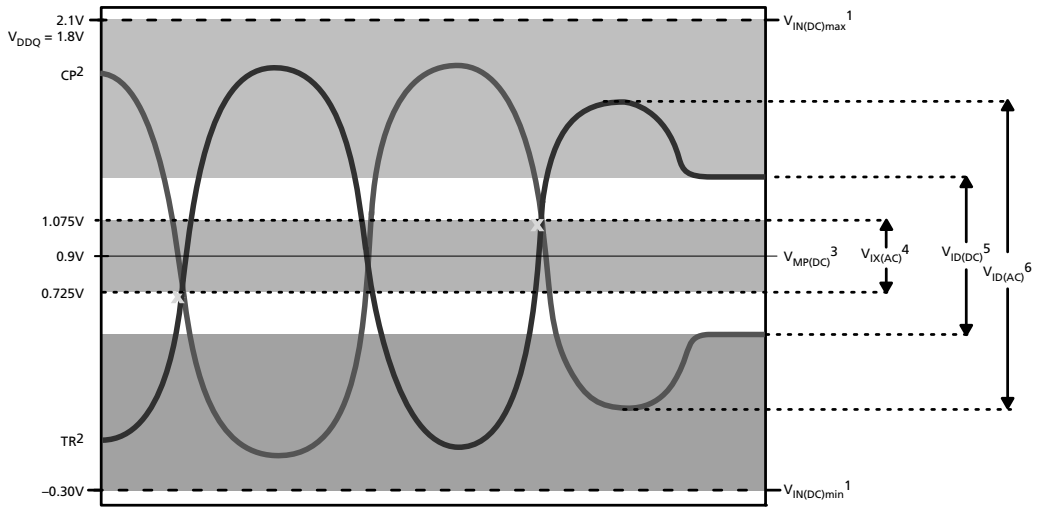


Notes:
1. TR and CP may not be more positive than $V_{DDQ}$ + 0.3V or more negative than $V_{SS}$ - 0.3V.
2. TR represents the CK, DQS, RDQS, LDQS, and UDQS signals; CP represents CK#, DQS#, RDQS#, LDQS#, and UDQS# signals.
3. This provides a minimum of 850mV to a maximum of 950mV and is expected to be


Micron Technology, Inc. reserves the right to change products or specifications without notice.
© 2007 Micron Technology, Inc. All rights reserved.

$V_{DDQ}/2$.

4. TR and CP must cross in this region.
5. TR and CP must meet at least $V_{ID(DC)min}$ when static and is centered around $V_{MP(DC)}$.
6. TR and CP must have a minimum 500mV peak-to-peak swing.
7. Numbers in diagram reflect nominal values ($V_{DDQ}$ = 1.8V).


Micron Technology, Inc. reserves the right to change products or specifications without notice.
© 2007 Micron Technology, Inc. All rights reserved.

# Output Electrical Characteristics and Operating Conditions

### Table 18: Differential AC Output Parameters

| Parameter | Symbol | Min | Max | Units | Notes |
|---|---|---|---|---|---|
| AC differential cross-point voltage | $V_{OX(AC)}$ | 0.50 × $V_{DDQ}$ - 125 | 0.50 × $V_{DDQ}$ + 125 | mV | 1 |

Note: 1. The typical value of $V_{OX(AC)}$ is expected to be about 0.5 × $V_{DDQ}$ of the transmitting device and $V_{OX(AC)}$ is expected to track variations in $V_{DDQ}$. $V_{OX(AC)}$ indicates the voltage at which differential output signals must cross.

### Figure 15: Differential Output Signal Levels

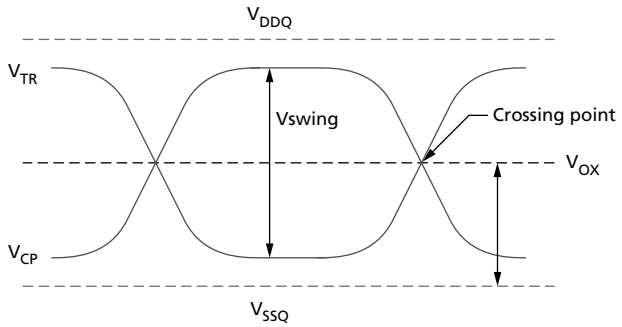


### Table 19: Output DC Current Drive

| Parameter | Symbol | Value | Units | Notes |
|---|---|---|---|---|
| Output MIN source DC current | $I_{OH}$ | –13.4 | mA | 1, 2, 4 |
| Output MIN sink DC current | $I_{OL}$ | 13.4 | mA | 2, 3, 4 |

Notes:
1. For $I_{OH(DC)}$; $V_{DDQ}$ = 1.7V, $V_{OUT}$ = 1,420mV. ($V_{OUT}$ - $V_{DDQ}$)/$I_{OH}$ must be less than 21Ω for values of $V_{OUT}$ between $V_{DDQ}$ and $V_{DDQ}$ - 280mV.
2. For $I_{OL(DC)}$; $V_{DDQ}$ = 1.7V, $V_{OUT}$ = 280mV. $V_{OUT}$/$I_{OL}$ must be less than 21Ω for values of $V_{OUT}$ between 0V and 280mV.
3. The DC value of $V_{REF}$ applied to the receiving device is set to $V_{TT}$.
4. The values of $I_{OH(DC)}$ and $I_{OL(DC)}$ are based on the conditions given in Notes 1 and 2. They are used to test device drive current capability to ensure $V_{IH,min}$ plus a noise margin and $V_{IL,max}$ minus a noise margin are delivered to an SSTL_18 receiver. The actual current values are derived by shifting the desired driver operating point (see output IV curves) along a 21Ω load line to define a convenient driver current for measurement.


Micron Technology, Inc. reserves the right to change products or specifications without notice.
© 2007 Micron Technology, Inc. All rights reserved.

**Table 20: Output Characteristics**

| Parameter | Min | Nom | Max | Units | Notes |
|---|---|---|---|---|---|
| Output impedance | See Output Driver Characteristics (page 53) | | | Ω | 1, 2 |
| Pull-up and pull-down mismatch | 0 | – | 4 | Ω | 1, 2, 3 |
| Output slew rate | 1.5 | – | 5 | V/ns | 1, 4, 5, 6 |

Notes:
1. Absolute specifications: 0°C ≤ $T_C$ ≤ +85°C; $V_{DDQ}$ = 1.8V ±0.1V, $V_{DD}$ = 1.8V ±0.1V.
2. Impedance measurement conditions for output source DC current: $V_{DDQ}$ = 1.7V; $V_{OUT}$ = 1420mV; ($V_{OUT}$ - $V_{DDQ}$)/$I_{OH}$ must be less than 23.4Ω for values of $V_{OUT}$ between $V_{DDQ}$ and $V_{DDQ}$ - 280mV. The impedance measurement condition for output sink DC current: $V_{DDQ}$ = 1.7V; $V_{OUT}$ = 280mV; $V_{OUT}$/$I_{OL}$ must be less than 23.4Ω for values of $V_{OUT}$ between 0V and 280mV.
3. Mismatch is an absolute value between pull-up and pull-down; both are measured at the same temperature and voltage.
4. Output slew rate for falling and rising edges is measured between $V_{TT}$ - 250mV and $V_{TT}$ + 250mV for single-ended signals. For differential signals (DQS, DQS#), output slew rate is measured between DQS - DQS# = –500mV and DQS# - DQS = 500mV. Output slew rate is guaranteed by design but is not necessarily tested on each device.
5. The absolute value of the slew rate as measured from $V_{IL(DC)max}$ to $V_{IH(DC)min}$ is equal to or greater than the slew rate as measured from $V_{IL(AC)max}$ to $V_{IH(AC)min}$. This is guaranteed by design and characterization.
6. IT and AT devices require an additional 0.4 V/ns in the MAX limit when $T_C$ is between –40°C and 0°C.

**Figure 16: Output Slew Rate Load**

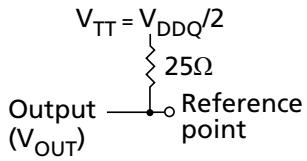



Micron Technology, Inc. reserves the right to change products or specifications without notice.
© 2007 Micron Technology, Inc. All rights reserved.

# Output Driver Characteristics

### Figure 17: Full Strength Pull-Down Characteristics

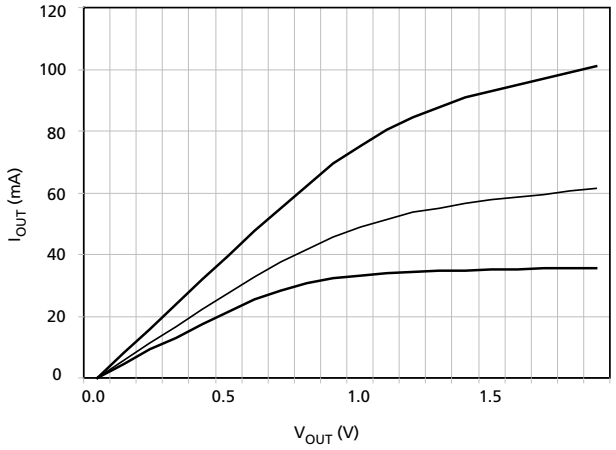


### Table 21: Full Strength Pull-Down Current (mA)

| Voltage (V) | Min | Nom | Max |
|---|---|---|---|
| 0.0 | 0.00 | 0.00 | 0.00 |
| 0.1 | 4.30 | 5.63 | 7.95 |
| 0.2 | 8.60 | 11.30 | 15.90 |
| 0.3 | 12.90 | 16.52 | 23.85 |
| 0.4 | 16.90 | 22.19 | 31.80 |
| 0.5 | 20.40 | 27.59 | 39.75 |
| 0.6 | 23.28 | 32.39 | 47.70 |
| 0.7 | 25.44 | 36.45 | 55.55 |
| 0.8 | 26.79 | 40.38 | 62.95 |
| 0.9 | 27.67 | 44.01 | 69.55 |
| 1.0 | 28.38 | 47.01 | 75.35 |
| 1.1 | 28.96 | 49.63 | 80.35 |
| 1.2 | 29.46 | 51.71 | 84.55 |
| 1.3 | 29.90 | 53.32 | 87.95 |
| 1.4 | 30.29 | 54.9 | 90.70 |
| 1.5 | 30.65 | 56.03 | 93.00 |
| 1.6 | 30.98 | 57.07 | 95.05 |
| 1.7 | 31.31 | 58.16 | 97.05 |
| 1.8 | 31.64 | 59.27 | 99.05 |
| 1.9 | 31.96 | 60.35 | 101.05 |


Micron Technology, Inc. reserves the right to change products or specifications without notice.
© 2007 Micron Technology, Inc. All rights reserved.

**Figure 18: Full Strength Pull-Up Characteristics**

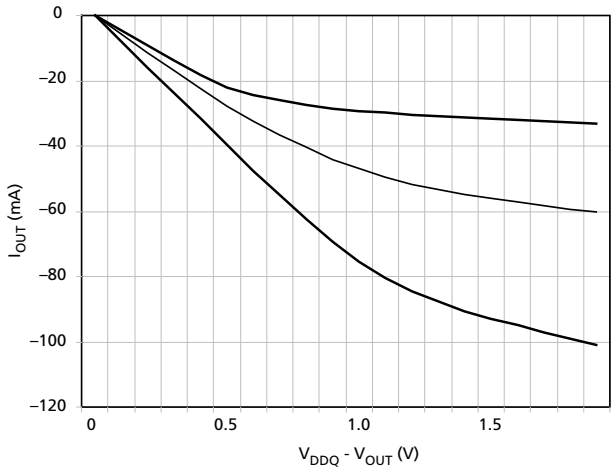


**Table 22: Full Strength Pull-Up Current (mA)**

| Voltage (V) | Min | Nom | Max |
|---|---|---|---|
| 0.0 | 0.00 | 0.00 | 0.00 |
| 0.1 | –4.30 | –5.63 | –7.95 |
| 0.2 | –8.60 | –11.30 | –15.90 |
| 0.3 | –12.90 | –16.52 | –23.85 |
| 0.4 | –16.90 | –22.19 | –31.80 |
| 0.5 | –20.40 | –27.59 | –39.75 |
| 0.6 | –23.28 | –32.39 | –47.70 |
| 0.7 | –25.44 | –36.45 | –55.55 |
| 0.8 | –26.79 | –40.38 | –62.95 |
| 0.9 | –27.67 | –44.01 | –69.55 |
| 1.0 | –28.38 | –47.01 | –75.35 |
| 1.1 | –28.96 | –49.63 | –80.35 |
| 1.2 | –29.46 | –51.71 | –84.55 |
| 1.3 | –29.90 | –53.32 | –87.95 |
| 1.4 | –30.29 | –54.90 | –90.70 |
| 1.5 | –30.65 | –56.03 | –93.00 |
| 1.6 | –30.98 | –57.07 | –95.05 |
| 1.7 | –31.31 | –58.16 | –97.05 |
| 1.8 | –31.64 | –59.27 | –99.05 |
| 1.9 | –31.96 | –60.35 | –101.05 |


Micron Technology, Inc. reserves the right to change products or specifications without notice.
© 2007 Micron Technology, Inc. All rights reserved.

**Figure 19: Reduced Strength Pull-Down Characteristics**

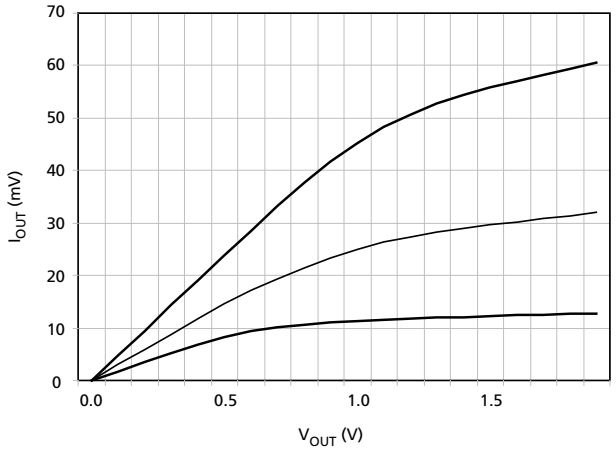


**Table 23: Reduced Strength Pull-Down Current (mA)**

| Voltage (V) | Min | Nom | Max |
|---|---|---|---|
| 0.0 | 0.00 | 0.00 | 0.00 |
| 0.1 | 1.72 | 2.98 | 4.77 |
| 0.2 | 3.44 | 5.99 | 9.54 |
| 0.3 | 5.16 | 8.75 | 14.31 |
| 0.4 | 6.76 | 11.76 | 19.08 |
| 0.5 | 8.16 | 14.62 | 23.85 |
| 0.6 | 9.31 | 17.17 | 28.62 |
| 0.7 | 10.18 | 19.32 | 33.33 |
| 0.8 | 10.72 | 21.40 | 37.77 |
| 0.9 | 11.07 | 23.32 | 41.73 |
| 1.0 | 11.35 | 24.92 | 45.21 |
| 1.1 | 11.58 | 26.30 | 48.21 |
| 1.2 | 11.78 | 27.41 | 50.73 |
| 1.3 | 11.96 | 28.26 | 52.77 |
| 1.4 | 12.12 | 29.10 | 54.42 |
| 1.5 | 12.26 | 29.70 | 55.80 |
| 1.6 | 12.39 | 30.25 | 57.03 |
| 1.7 | 12.52 | 30.82 | 58.23 |
| 1.8 | 12.66 | 31.41 | 59.43 |
| 1.9 | 12.78 | 31.98 | 60.63 |


Micron Technology, Inc. reserves the right to change products or specifications without notice.
© 2007 Micron Technology, Inc. All rights reserved.

**Figure 20: Reduced Strength Pull-Up Characteristics**

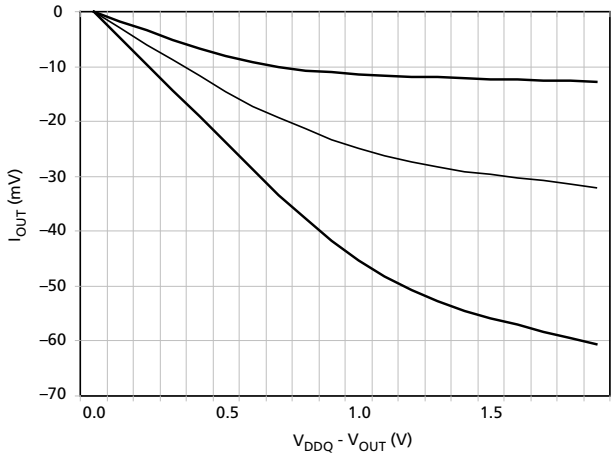


**Table 24: Reduced Strength Pull-Up Current (mA)**

| Voltage (V) | Min | Nom | Max |
|---|---|---|---|
| 0.0 | 0.00 | 0.00 | 0.00 |
| 0.1 | –1.72 | –2.98 | –4.77 |
| 0.2 | –3.44 | –5.99 | –9.54 |
| 0.3 | –5.16 | –8.75 | –14.31 |
| 0.4 | –6.76 | –11.76 | –19.08 |
| 0.5 | –8.16 | –14.62 | –23.85 |
| 0.6 | –9.31 | –17.17 | –28.62 |
| 0.7 | –10.18 | –19.32 | –33.33 |
| 0.8 | –10.72 | –21.40 | –37.77 |
| 0.9 | –11.07 | –23.32 | –41.73 |
| 1.0 | –11.35 | –24.92 | –45.21 |
| 1.1 | –11.58 | –26.30 | –48.21 |
| 1.2 | –11.78 | –27.41 | –50.73 |
| 1.3 | –11.96 | –28.26 | –52.77 |
| 1.4 | –12.12 | –29.10 | –54.42 |
| 1.5 | –12.26 | –29.69 | –55.8 |
| 1.6 | –12.39 | –30.25 | –57.03 |
| 1.7 | –12.52 | –30.82 | –58.23 |
| 1.8 | –12.66 | –31.42 | –59.43 |
| 1.9 | –12.78 | –31.98 | –60.63 |


Micron Technology, Inc. reserves the right to change products or specifications without notice.
© 2007 Micron Technology, Inc. All rights reserved.

# Power and Ground Clamp Characteristics

Power and ground clamps are provided on the following input-only balls: Address balls, bank address balls, CS#, RAS#, CAS#, WE#, ODT, and CKE.

**Table 25: Input Clamp Characteristics**

| Voltage Across Clamp (V) | Minimum Power Clamp Current (mA) | Minimum Ground Clamp Current (mA) |
|---|---|---|
| 0.0 | 0.0 | 0.0 |
| 0.1 | 0.0 | 0.0 |
| 0.2 | 0.0 | 0.0 |
| 0.3 | 0.0 | 0.0 |
| 0.4 | 0.0 | 0.0 |
| 0.5 | 0.0 | 0.0 |
| 0.6 | 0.0 | 0.0 |
| 0.7 | 0.0 | 0.0 |
| 0.8 | 0.1 | 0.1 |
| 0.9 | 1.0 | 1.0 |
| 1.0 | 2.5 | 2.5 |
| 1.1 | 4.7 | 4.7 |
| 1.2 | 6.8 | 6.8 |
| 1.3 | 9.1 | 9.1 |
| 1.4 | 11.0 | 11.0 |
| 1.5 | 13.5 | 13.5 |
| 1.6 | 16.0 | 16.0 |
| 1.7 | 18.2 | 18.2 |
| 1.8 | 21.0 | 21.0 |

**Figure 21: Input Clamp Characteristics**

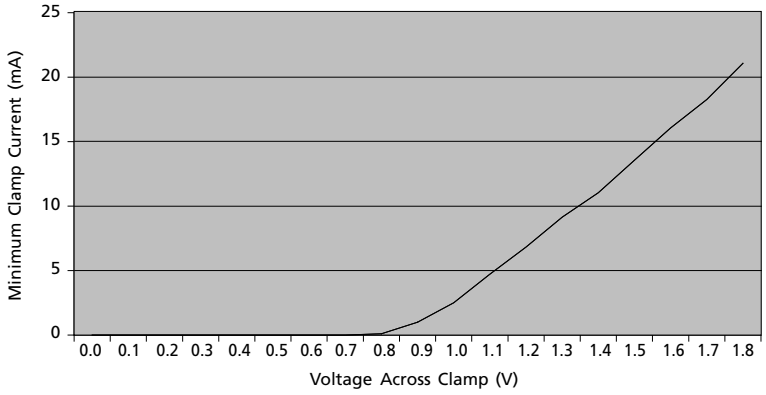



Micron Technology, Inc. reserves the right to change products or specifications without notice.
© 2007 Micron Technology, Inc. All rights reserved.

# AC Overshoot/Undershoot Specification

### Table 26: Address and Control Balls

Applies to address balls, bank address balls, CS#, RAS#, CAS#, WE#, CKE, and ODT

| Parameter | Specification | | | | |
|---|---|---|---|---|---|
| | -187E | -25/-25E | -3/-3E | -37E | -5E |
| Maximum peak amplitude allowed for overshoot area (see Figure 22) | 0.50V | 0.50V | 0.50V | 0.50V | 0.50V |
| Maximum peak amplitude allowed for undershoot area (see Figure 23) | 0.50V | 0.50V | 0.50V | 0.50V | 0.50V |
| Maximum overshoot area above $V_{DD}$ (see Figure 22) | 0.5 Vns | 0.66 Vns | 0.80 Vns | 1.00 Vns | 1.33 Vns |
| Maximum undershoot area below $V_{SS}$ (see Figure 23) | 0.5 Vns | 0.66 Vns | 0.80 Vns | 1.00 Vns | 1.33 Vns |

### Table 27: Clock, Data, Strobe, and Mask Balls

Applies to DQ, DQS, DQS#, RDQS, RDQS#, UDQS, UDQS#, LDQS, LDQS#, DM, UDM, and LDM

| Parameter | Specification | | | | |
|---|---|---|---|---|---|
| | -187E | -25/-25E | -3/-3E | -37E | -5E |
| Maximum peak amplitude allowed for overshoot area (see Figure 22) | 0.50V | 0.50V | 0.50V | 0.50V | 0.50V |
| Maximum peak amplitude allowed for undershoot area (see Figure 23) | 0.50V | 0.50V | 0.50V | 0.50V | 0.50V |
| Maximum overshoot area above $V_{DDQ}$ (see Figure 22) | 0.19 Vns | 0.23 Vns | 0.23 Vns | 0.28 Vns | 0.38 Vns |
| Maximum undershoot area below $V_{SSQ}$ (see Figure 23) | 0.19 Vns | 0.23 Vns | 0.23 Vns | 0.28 Vns | 0.38 Vns |

### Figure 22: Overshoot

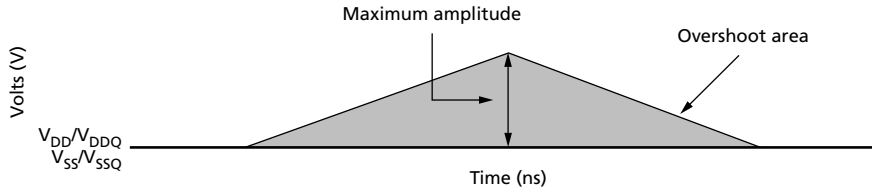


### Figure 23: Undershoot

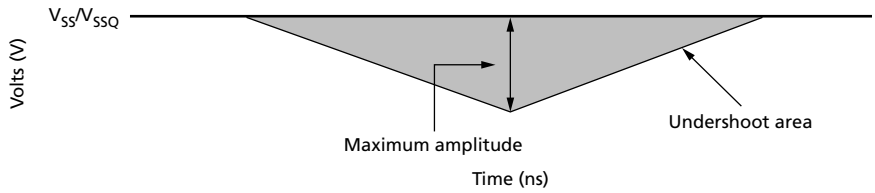



Micron Technology, Inc. reserves the right to change products or specifications without notice.
© 2007 Micron Technology, Inc. All rights reserved.

**Table 28: AC Input Test Conditions**

| Parameter | Symbol | Min | Max | Units | Notes |
|---|---|---|---|---|---|
| Input setup timing measurement reference level address balls, bank address balls, CS#, RAS#, CAS#, WE#, ODT, DM, UDM, LDM, and CKE | $V_{RS}$ | See Note 2 | | | 1, 2, 3, 4 |
| Input hold timing measurement reference level address balls, bank address balls, CS#, RAS#, CAS#, WE#, ODT, DM, UDM, LDM, and CKE | $V_{RH}$ | See Note 5 | | | 1, 3, 4, 5 |
| Input timing measurement reference level (single-ended) DQS for x4, x8; UDQS, LDQS for x16 | $V_{REF(DC)}$ | $V_{DDQ} \times 0.49$ | $V_{DDQ} \times 0.51$ | V | 1, 3, 4, 6 |
| Input timing measurement reference level (differential) CK, CK# for x4, x8, x16; DQS, DQS# for x4, x8; RDQS, RDQS# for x8; UDQS, UDQS#, LDQS, LDQS# for x16 | $V_{RD}$ | $V_{IX(AC)}$ | | V | 1, 3, 7, 8, 9 |

Notes:
1. All voltages referenced to $V_{SS}$.
2. Input waveform setup timing ($^{t}IS_{b}$) is referenced from the input signal crossing at the $V_{IH(AC)}$ level for a rising signal and $V_{IL(AC)}$ for a falling signal applied to the device under test, as shown in Figure 32 (page 72).
3. See Input Slew Rate Derating (page 60).
4. The slew rate for single-ended inputs is measured from DC level to AC level, $V_{IL(DC)}$ to $V_{IH(AC)}$ on the rising edge and $V_{IL(AC)}$ to $V_{IH(DC)}$ on the falling edge. For signals referenced to $V_{REF}$, the valid intersection is where the "tangent" line intersects $V_{REF}$, as shown in Figure 25 (page 63), Figure 27 (page 64), Figure 29 (page 70), and Figure 31 (page 71).
5. Input waveform hold ($^{t}IH_{b}$) timing is referenced from the input signal crossing at the $V_{IL(DC)}$ level for a rising signal and $V_{IH(DC)}$ for a falling signal applied to the device under test, as shown in Figure 32 (page 72).
6. Input waveform setup timing ($^{t}DS$) and hold timing ($^{t}DH$) for single-ended data strobe is referenced from the crossing of DQS, UDQS, or LDQS through the Vref level applied to the device under test, as shown in Figure 34 (page 73).
7. Input waveform setup timing ($^{t}DS$) and hold timing ($^{t}DH$) when differential data strobe is enabled is referenced from the cross-point of DQS/DQS#, UDQS/UDQS#, or LDQS/LDQS#, as shown in Figure 33 (page 72).
8. Input waveform timing is referenced to the crossing point level ($V_{IX}$) of two input signals ($V_{TR}$ and $V_{CP}$) applied to the device under test, where $V_{TR}$ is the true input signal and $V_{CP}$ is the complementary input signal, as shown in Figure 35 (page 73).
9. The slew rate for differentially ended inputs is measured from twice the DC level to twice the AC level: $2 \times V_{IL(DC)}$ to $2 \times V_{IH(AC)}$ on the rising edge and $2 \times V_{IL(AC)}$ to $2 \times V_{IH(DC)}$ on the falling edge. For example, the CK/CK# would be –250mV to 500mV for CK rising edge and would be 250mV to –500mV for CK falling edge.


Micron Technology, Inc. reserves the right to change products or specifications without notice.
© 2007 Micron Technology, Inc. All rights reserved.

# Input Slew Rate Derating

For all input signals, the total $^{t}$IS (setup time) and $^{t}$IH (hold time) required is calculated by adding the data sheet $^{t}$IS (base) and $^{t}$IH (base) value to the $\Delta^{t}$IS and $\Delta^{t}$IH derating value, respectively. Example: $^{t}$IS (total setup time) = $^{t}$IS (base) + $\Delta^{t}$IS.

$^{t}$IS, the nominal slew rate for a rising signal, is defined as the slew rate between the last crossing of $V_{REF(DC)}$ and the first crossing of $V_{IH(AC)min}$. Setup nominal slew rate ($^{t}$IS) for a falling signal is defined as the slew rate between the last crossing of $V_{REF(DC)}$ and the first crossing of $V_{IL(AC)max}$.

If the actual signal is always earlier than the nominal slew rate line between shaded "$V_{REF(DC)}$ to AC region," use the nominal slew rate for the derating value (Figure 24 (page 63)).

If the actual signal is later than the nominal slew rate line anywhere between the shaded "$V_{REF(DC)}$ to AC region," the slew rate of a tangent line to the actual signal from the AC level to DC level is used for the derating value (see Figure 25 (page 63)).

$^{t}$IH, the nominal slew rate for a rising signal, is defined as the slew rate between the last crossing of $V_{IL(DC)max}$ and the first crossing of $V_{REF(DC)}$. $^{t}$IH, nominal slew rate for a falling signal, is defined as the slew rate between the last crossing of $V_{IH(DC)min}$ and the first crossing of $V_{REF(DC)}$.

If the actual signal is always later than the nominal slew rate line between shaded "DC to $V_{REF(DC)}$ region," use the nominal slew rate for the derating value (Figure 26 (page 64)).

If the actual signal is earlier than the nominal slew rate line anywhere between shaded "DC to $V_{REF(DC)}$ region," the slew rate of a tangent line to the actual signal from the DC level to $V_{REF(DC)}$ level is used for the derating value (Figure 27 (page 64)).

Although the total setup time might be negative for slow slew rates (a valid input signal will not have reached $V_{IH[AC]}/V_{IL[AC]}$ at the time of the rising clock transition), a valid input signal is still required to complete the transition and reach $V_{IH(AC)}/V_{IL(AC)}$.

For slew rates in between the values listed in Table 29 (page 61) and Table 30 (page 62), the derating values may obtained by linear interpolation.


Micron Technology, Inc. reserves the right to change products or specifications without notice.
© 2007 Micron Technology, Inc. All rights reserved.

**Table 29: DDR2-400/533 Setup and Hold Time Derating Values ($^{t}$IS and $^{t}$IH)**

| Command/Address Slew Rate (V/ns) | CK, CK# Differential Slew Rate | | | | | | Units |
|---|---|---|---|---|---|---|---|
| | 2.0 V/ns | | 1.5 V/ns | | 1.0 V/ns | | |
| | $\Delta^{t}$IS | $\Delta^{t}$IH | $\Delta^{t}$IS | $\Delta^{t}$IH | $\Delta^{t}$IS | $\Delta^{t}$IH | |
| 4.0 | 187 | 94 | 217 | 124 | 247 | 154 | ps |
| 3.5 | 179 | 89 | 209 | 119 | 239 | 149 | ps |
| 3.0 | 167 | 83 | 197 | 113 | 227 | 143 | ps |
| 2.5 | 150 | 75 | 180 | 105 | 210 | 135 | ps |
| 2.0 | 125 | 45 | 155 | 75 | 185 | 105 | ps |
| 1.5 | 83 | 21 | 113 | 51 | 143 | 81 | ps |
| 1.0 | 0 | 0 | 30 | 30 | 60 | 60 | ps |
| 0.9 | –11 | –14 | 19 | 16 | 49 | 46 | ps |
| 0.8 | –25 | –31 | 5 | –1 | 35 | 29 | ps |
| 0.7 | –43 | –54 | –13 | –24 | 17 | 6 | ps |
| 0.6 | –67 | –83 | –37 | –53 | –7 | –23 | ps |
| 0.5 | –110 | –125 | –80 | –95 | –50 | –65 | ps |
| 0.4 | –175 | –188 | –145 | –158 | –115 | –128 | ps |
| 0.3 | –285 | –292 | –255 | –262 | –225 | –232 | ps |
| 0.25 | –350 | –375 | –320 | –345 | –290 | –315 | ps |
| 0.2 | –525 | –500 | –495 | –470 | –465 | –440 | ps |
| 0.15 | –800 | –708 | –770 | –678 | –740 | –648 | ps |
| 0.1 | –1450 | –1125 | –1420 | –1095 | –1390 | –1065 | ps |


Micron Technology, Inc. reserves the right to change products or specifications without notice.
© 2007 Micron Technology, Inc. All rights reserved.

**Table 30: DDR2-667/800/1066 Setup and Hold Time Derating Values ($^{t}$IS and $^{t}$IH)**

| Command/ Address Slew Rate (V/ns) | CK, CK# Differential Slew Rate | | | | | | Units |
|---|---|---|---|---|---|---|---|
| | 2.0 V/ns | | 1.5 V/ns | | 1.0 V/ns | | |
| | $\Delta^{t}$IS | $\Delta^{t}$IH | $\Delta^{t}$IS | $\Delta^{t}$IH | $\Delta^{t}$IS | $\Delta^{t}$IH | |
| 4.0 | 150 | 94 | 180 | 124 | 210 | 154 | ps |
| 3.5 | 143 | 89 | 173 | 119 | 203 | 149 | ps |
| 3.0 | 133 | 83 | 163 | 113 | 193 | 143 | ps |
| 2.5 | 120 | 75 | 150 | 105 | 180 | 135 | ps |
| 2.0 | 100 | 45 | 160 | 75 | 160 | 105 | ps |
| 1.5 | 67 | 21 | 97 | 51 | 127 | 81 | ps |
| 1.0 | 0 | 0 | 30 | 30 | 60 | 60 | ps |
| 0.9 | –5 | –14 | 25 | 16 | 55 | 46 | ps |
| 0.8 | –13 | –31 | 17 | –1 | 47 | 29 | ps |
| 0.7 | –22 | –54 | 8 | –24 | 38 | 6 | ps |
| 0.6 | –34 | –83 | –4 | –53 | 36 | –23 | ps |
| 0.5 | –60 | –125 | –30 | –95 | 0 | –65 | ps |
| 0.4 | –100 | –188 | –70 | –158 | –40 | –128 | ps |
| 0.3 | –168 | –292 | –138 | –262 | –108 | –232 | ps |
| 0.25 | –200 | –375 | –170 | –345 | –140 | –315 | ps |
| 0.2 | –325 | –500 | –295 | –470 | –265 | –440 | ps |
| 0.15 | –517 | –708 | –487 | –678 | –457 | –648 | ps |
| 0.1 | –1000 | –1125 | –970 | –1095 | –940 | –1065 | ps |


Micron Technology, Inc. reserves the right to change products or specifications without notice.
© 2007 Micron Technology, Inc. All rights reserved.

## Figure 24: Nominal Slew Rate for $^{t}IS$

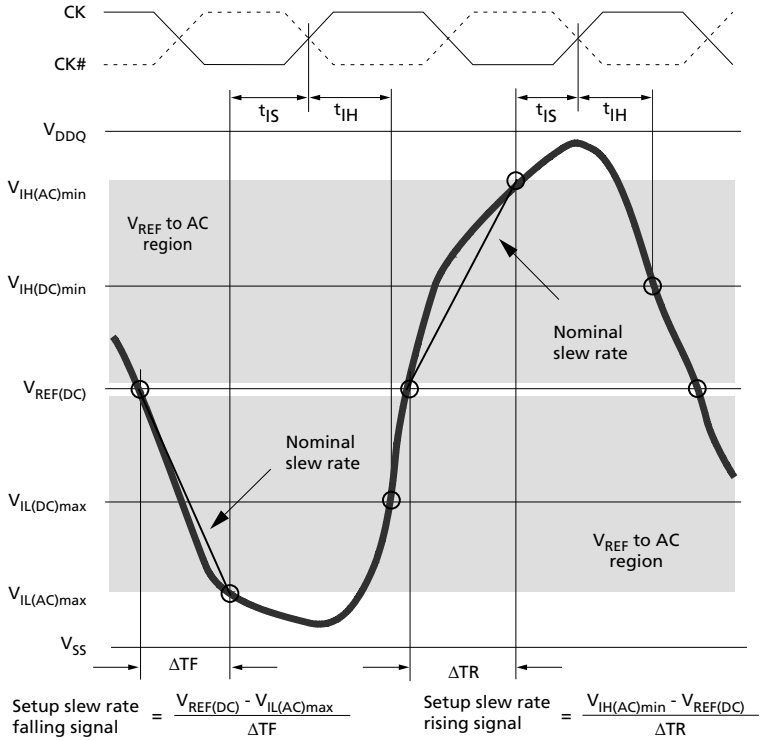


## Figure 25: Tangent Line for $^{t}IS$

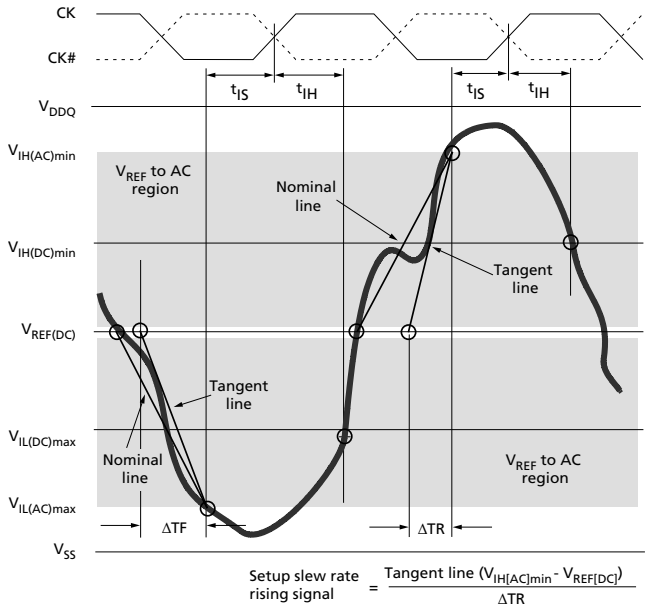



Micron Technology, Inc. reserves the right to change products or specifications without notice.
© 2007 Micron Technology, Inc. All rights reserved.

## Figure 26: Nominal Slew Rate for $^{t}IH$

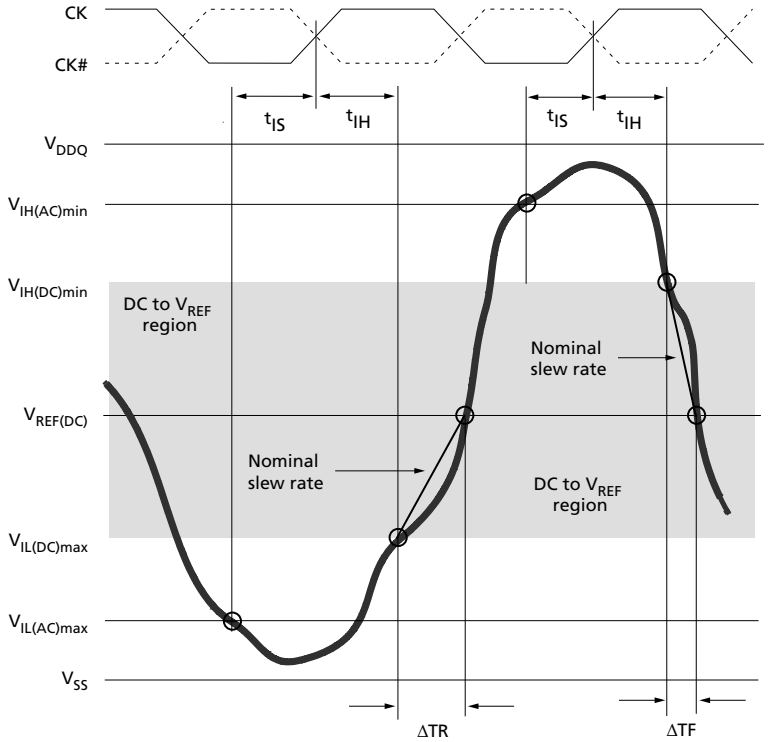


## Figure 27: Tangent Line for $^{t}IH$

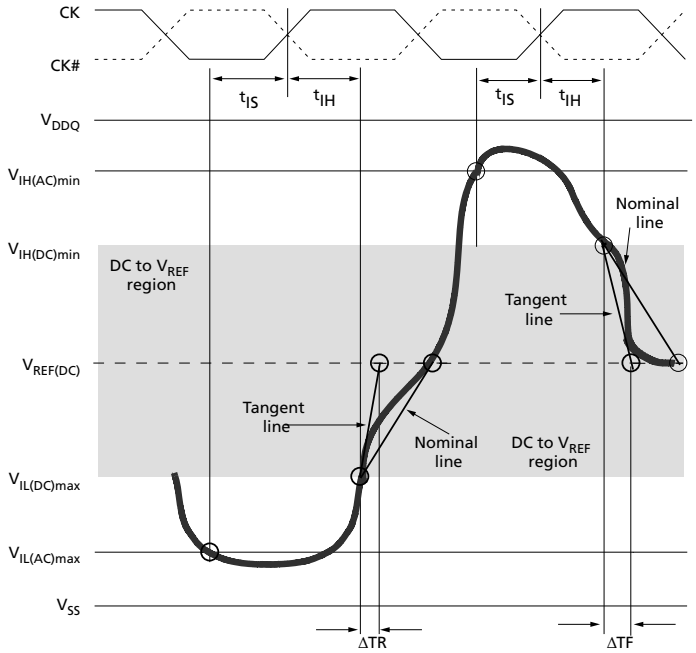


$$\text{Hold slew rate rising signal} = \frac{\text{Tangent line } (V_{REF[DC]} - V_{IL[DC]max})}{\Delta TR} \qquad \text{Hold slew rate falling signal} = \frac{\text{Tangent line } (V_{IH[DC]min} - V_{REF[DC]})}{\Delta TF}$$


Micron Technology, Inc. reserves the right to change products or specifications without notice.
© 2007 Micron Technology, Inc. All rights reserved.

**Table 31: DDR2-400/533 $^{t}$DS, $^{t}$DH Derating Values with Differential Strobe**

All units are shown in picoseconds

| DQ Slew Rate (V/ns) | DQS, DQS# Differential Slew Rate | | | | | | | | | | | | | | | | | |
|---|---|---|---|---|---|---|---|---|---|---|---|---|---|---|---|---|---|---|
| | 4.0 V/ns | | 3.0 V/ns | | 2.0 V/ns | | 1.8 V/ns | | 1.6 V/ns | | 1.4 V/ns | | 1.2 V/ns | | 1.0 V/ns | | 0.8 V/ns | |
| | Δ $^{t}$DS | Δ $^{t}$DH | Δ $^{t}$DS | Δ $^{t}$DH | Δ $^{t}$DS | Δ $^{t}$DH | Δ $^{t}$DS | Δ $^{t}$DH | Δ $^{t}$DS | Δ $^{t}$DH | Δ $^{t}$DS | Δ $^{t}$DH | Δ $^{t}$DS | Δ $^{t}$DH | Δ $^{t}$DS | Δ $^{t}$DH | Δ $^{t}$DS | Δ $^{t}$DH |
| 2.0 | 125 | 45 | 125 | 45 | 125 | 45 | – | – | – | – | – | – | – | – | – | – | – | – |
| 1.5 | 83 | 21 | 83 | 21 | 83 | 21 | 95 | 33 | – | – | – | – | – | – | – | – | – | – |
| 1.0 | 0 | 0 | 0 | 0 | 0 | 0 | 12 | 12 | 24 | 24 | – | – | – | – | – | – | – | – |
| 0.9 | – | – | –11 | –14 | –11 | –14 | 1 | –2 | 13 | 10 | 25 | 22 | – | – | – | – | – | – |
| 0.8 | – | – | – | – | –25 | –31 | –13 | –19 | –1 | –7 | 11 | 5 | 23 | 17 | – | – | – | – |
| 0.7 | – | – | – | – | – | – | –31 | –42 | –19 | –30 | –7 | –18 | 5 | –6 | 17 | 6 | – | – |
| 0.6 | – | – | – | – | – | – | – | – | –43 | –59 | –31 | –47 | –19 | –35 | –7 | –23 | 5 | –11 |
| 0.5 | – | – | – | – | – | – | – | – | – | – | –74 | –89 | –62 | –77 | –50 | –65 | –38 | –53 |
| 0.4 | – | – | – | – | – | – | – | – | – | – | – | – | –127 | –140 | –115 | –128 | –103 | –116 |

Notes:
1. For all input signals, the total $^{t}$DS and $^{t}$DH required is calculated by adding the data sheet value to the derating value listed in Table 31.
2. $^{t}$DS nominal slew rate for a rising signal is defined as the slew rate between the last crossing of $V_{REF(DC)}$ and the first crossing of $V_{IH(AC)min}$. $^{t}$DS nominal slew rate for a falling signal is defined as the slew rate between the last crossing of $V_{REF(DC)}$ and the first crossing of $V_{IL(AC)max}$. If the actual signal is always earlier than the nominal slew rate line between the shaded "$V_{REF(DC)}$ to AC region," use the nominal slew rate for the derating value (see Figure 28 (page 70)). If the actual signal is later than the nominal slew rate line anywhere between the shaded "$V_{REF(DC)}$ to AC region," the slew rate of a tangent line to the actual signal from the AC level to DC level is used for the derating value (see Figure 29 (page 70)).
3. $^{t}$DH nominal slew rate for a rising signal is defined as the slew rate between the last crossing of $V_{IL(DC)max}$ and the first crossing of $V_{REF(DC)}$. $^{t}$DH nominal slew rate for a falling signal is defined as the slew rate between the last crossing of $V_{IH(DC)min}$ and the first crossing of $V_{REF(DC)}$. If the actual signal is always later than the nominal slew rate line between the shaded "DC level to $V_{REF(DC)}$ region," use the nominal slew rate for the derating value (see Figure 30 (page 71)). If the actual signal is earlier than the nominal slew rate line anywhere between shaded "DC to $V_{REF(DC)}$ region," the slew rate of a tangent line to the actual signal from the DC level to $V_{REF(DC)}$ level is used for the derating value (see Figure 31 (page 71)).
4. Although the total setup time might be negative for slow slew rates (a valid input signal will not have reached $V_{IH[AC]}$/$V_{IL[AC]}$ at the time of the rising clock transition), a valid input signal is still required to complete the transition and reach $V_{IH(AC)}$/$V_{IL(AC)}$.
5. For slew rates between the values listed in this table, the derating values may be obtained by linear interpolation.
6. These values are typically not subject to production test. They are verified by design and characterization.
7. Single-ended DQS requires special derating. The values in Table 33 (page 68) are the DQS single-ended slew rate derating with DQS referenced at $V_{REF}$ and DQ referenced at the logic levels $^{t}DS_b$ and $^{t}DH_b$. Converting the derated base values from DQ referenced to the AC/DC trip points to DQ referenced to $V_{REF}$ is listed in Table 35 (page 69) and Table 36 (page 69). Table 35 provides the $V_{REF}$-based fully derated values for the DQ


Micron Technology, Inc. reserves the right to change products or specifications without notice.
© 2007 Micron Technology, Inc. All rights reserved.

($^tDS_a$ and $^tDH_a$) for DDR2-533. Table 36 provides the $V_{REF}$-based fully derated values for the DQ ($^tDS_a$ and $^tDH_a$) for DDR2-400.


Micron Technology, Inc. reserves the right to change products or specifications without notice.
© 2007 Micron Technology, Inc. All rights reserved.

**Table 32: DDR2-667/800/1066 $^{t}$DS, $^{t}$DH Derating Values with Differential Strobe**

All units are shown in picoseconds

| DQ Slew Rate (V/ns) | DQS, DQS# Differential Slew Rate | | | | | | | | | | | | | | | | | |
|---|---|---|---|---|---|---|---|---|---|---|---|---|---|---|---|---|---|---|
| | 2.8 V/ns | | 2.4 V/ns | | 2.0 V/ns | | 1.8 V/ns | | 1.6 V/ns | | 1.4 V/ns | | 1.2 V/ns | | 1.0 V/ns | | 0.8 V/ns | |
| | Δ $^{t}$DS | Δ $^{t}$DH | Δ $^{t}$DS | Δ $^{t}$DH | Δ $^{t}$DS | Δ $^{t}$DH | Δ $^{t}$DS | Δ $^{t}$DH | Δ $^{t}$DS | Δ $^{t}$DH | Δ $^{t}$DS | Δ $^{t}$DH | Δ $^{t}$DS | Δ $^{t}$DH | Δ $^{t}$DS | Δ $^{t}$DH | Δ $^{t}$DS | Δ $^{t}$DH |
| 2.0 | 100 | 63 | 100 | 63 | 100 | 63 | 112 | 75 | 124 | 87 | 136 | 99 | 148 | 111 | 160 | 123 | 172 | 135 |
| 1.5 | 67 | 42 | 67 | 42 | 67 | 42 | 79 | 54 | 91 | 66 | 103 | 78 | 115 | 90 | 127 | 102 | 139 | 114 |
| 1.0 | 0 | 0 | 0 | 0 | 0 | 0 | 12 | 12 | 24 | 24 | 36 | 36 | 48 | 48 | 60 | 60 | 72 | 72 |
| 0.9 | –5 | –14 | –5 | –14 | –5 | –14 | 7 | –2 | 19 | 10 | 31 | 22 | 43 | 34 | 55 | 46 | 67 | 58 |
| 0.8 | –13 | –31 | –13 | –31 | –13 | –31 | –1 | –19 | 11 | –7 | 23 | 5 | 35 | 17 | 47 | 29 | 59 | 41 |
| 0.7 | –22 | –54 | –22 | –54 | –22 | –54 | –10 | –42 | 2 | –30 | 14 | –18 | 26 | –6 | 38 | 6 | 50 | 18 |
| 0.6 | –34 | –83 | –34 | –83 | –34 | –83 | –22 | –71 | –10 | –59 | 2 | –47 | 14 | –35 | 26 | –23 | 38 | –11 |
| 0.5 | –60 | –125 | –60 | –125 | –60 | –125 | –48 | –113 | –36 | –101 | –24 | –89 | –12 | –77 | 0 | –65 | 12 | –53 |
| 0.4 | –100 | –188 | –100 | –188 | –100 | –188 | –88 | –176 | –76 | –164 | –64 | –152 | –52 | –140 | –40 | –128 | –28 | –116 |

Notes:
1. For all input signals the total $^{t}$DS and $^{t}$DH required is calculated by adding the data sheet value to the derating value listed in Table 32.
2. $^{t}$DS nominal slew rate for a rising signal is defined as the slew rate between the last crossing of $V_{REF(DC)}$ and the first crossing of $V_{IH(AC)min}$. $^{t}$DS nominal slew rate for a falling signal is defined as the slew rate between the last crossing of $V_{REF(DC)}$ and the first crossing of $V_{IL(AC)max}$. If the actual signal is always earlier than the nominal slew rate line between the shaded "$V_{REF(DC)}$ to AC region," use the nominal slew rate for the derating value (see Figure 28 (page 70)). If the actual signal is later than the nominal slew rate line anywhere between shaded "$V_{REF(DC)}$ to AC region," the slew rate of a tangent line to the actual signal from the AC level to DC level is used for the derating value (see Figure 29 (page 70)).
3. $^{t}$DH nominal slew rate for a rising signal is defined as the slew rate between the last crossing of $V_{IL(DC)max}$ and the first crossing of $V_{REF(DC)}$. $^{t}$DH nominal slew rate for a falling signal is defined as the slew rate between the last crossing of $V_{IH(DC)min}$ and the first crossing of $V_{REF(DC)}$. If the actual signal is always later than the nominal slew rate line between the shaded "DC level to $V_{REF(DC)}$ region," use the nominal slew rate for the derating value (see Figure 30 (page 71)). If the actual signal is earlier than the nominal slew rate line anywhere between the shaded "DC to $V_{REF(DC)}$ region," the slew rate of a tangent line to the actual signal from the DC level to $V_{REF(DC)}$ level is used for the derating value (see Figure 31 (page 71)).
4. Although the total setup time might be negative for slow slew rates (a valid input signal will not have reached $V_{IH[AC]}$/$V_{IL[AC]}$ at the time of the rising clock transition), a valid input signal is still required to complete the transition and reach $V_{IH(AC)}$/$V_{IL(AC)}$.
5. For slew rates between the values listed in this table, the derating values may be obtained by linear interpolation.
6. These values are typically not subject to production test. They are verified by design and characterization.
7. Single-ended DQS requires special derating. The values in Table 33 (page 68) are the DQS single-ended slew rate derating with DQS referenced at $V_{REF}$ and DQ referenced at the logic levels $^{t}DS_b$ and $^{t}DH_b$. Converting the derated base values from DQ referenced to the AC/DC trip points to DQ referenced to $V_{REF}$ is listed in Table 34 (page 68). Table 34 provides the $V_{REF}$-based fully derated values for the DQ ($^{t}DS_a$ and $^{t}DH_a$) for


Micron Technology, Inc. reserves the right to change products or specifications without notice.
© 2007 Micron Technology, Inc. All rights reserved.

DDR2-667. It is not advised to operate DDR2-800 and DDR2-1066 devices with single-ended DQS; however, Table 33 would be used with the base values.

### Table 33: Single-Ended DQS Slew Rate Derating Values Using $^tDS_b$ and $^tDH_b$

Reference points indicated in bold; Derating values are to be used with base $^tDS_b$- and $^tDH_b$-specified values

| | DQS Single-Ended Slew Rate Derated (at $V_{REF}$) | | | | | | | | | | | | | | | | | |
|---|---|---|---|---|---|---|---|---|---|---|---|---|---|---|---|---|---|---|
| | 2.0 V/ns | | 1.8 V/ns | | 1.6 V/ns | | 1.4 V/ns | | 1.2 V/ns | | 1.0 V/ns | | 0.8 V/ns | | 0.6 V/ns | | 0.4 V/ns | |
| DQ (V/ns) | $^tDS$ | $^tDH$ | $^tDS$ | $^tDH$ | $^tDS$ | $^tDH$ | $^tDS$ | $^tDH$ | $^tDS$ | $^tDH$ | $^tDS$ | $^tDH$ | $^tDS$ | $^tDH$ | $^tDS$ | $^tDH$ | $^tDS$ | $^tDH$ |
| 2.0 | 130 | 53 | 130 | 53 | 130 | 53 | 130 | 53 | 130 | 53 | 145 | 48 | 155 | 45 | 165 | 41 | 175 | 38 |
| 1.5 | 97 | 32 | 97 | 32 | 97 | 32 | 97 | 32 | 97 | 32 | 112 | 27 | 122 | 24 | 132 | 20 | 142 | 17 |
| 1.0 | 30 | –10 | 30 | –10 | 30 | –10 | 30 | –10 | 30 | –10 | **45** | **–15** | 55 | –18 | 65 | –22 | 75 | –25 |
| 0.9 | 25 | –24 | 25 | –24 | 25 | –24 | 25 | –24 | 25 | –24 | 40 | –29 | 50 | –32 | 60 | –36 | 70 | –39 |
| 0.8 | 17 | –41 | 17 | –41 | 17 | –41 | 17 | –41 | 17 | –41 | 32 | –46 | 42 | –49 | 52 | –53 | 61 | –56 |
| 0.7 | 5 | –64 | 5 | –64 | 5 | –64 | 5 | –64 | 5 | –64 | 20 | –69 | 30 | –72 | 40 | –75 | 50 | –79 |
| 0.6 | –7 | –93 | –7 | –93 | –7 | –93 | –7 | –93 | –7 | –93 | 8 | –98 | 18 | –102 | 28 | –105 | 38 | –108 |
| 0.5 | –28 | –135 | –28 | –135 | –28 | –135 | –28 | –135 | –28 | –135 | –13 | –140 | –3 | –143 | 7 | –147 | 17 | –150 |
| 0.4 | –78 | –198 | –78 | –198 | –78 | –198 | –78 | –198 | –78 | –198 | –63 | –203 | –53 | –206 | –43 | –210 | –33 | –213 |

### Table 34: Single-Ended DQS Slew Rate Fully Derated (DQS, DQ at $V_{REF}$) at DDR2-667

Reference points indicated in bold

| | DQS Single-Ended Slew Rate Derated (at $V_{REF}$) | | | | | | | | | | | | | | | | | |
|---|---|---|---|---|---|---|---|---|---|---|---|---|---|---|---|---|---|---|
| | 2.0 V/ns | | 1.8 V/ns | | 1.6 V/ns | | 1.4 V/ns | | 1.2 V/ns | | 1.0 V/ns | | 0.8 V/ns | | 0.6 V/ns | | 0.4 V/ns | |
| DQ (V/ns) | $^tDS$ | $^tDH$ | $^tDS$ | $^tDH$ | $^tDS$ | $^tDH$ | $^tDS$ | $^tDH$ | $^tDS$ | $^tDH$ | $^tDS$ | $^tDH$ | $^tDS$ | $^tDH$ | $^tDS$ | $^tDH$ | $^tDS$ | $^tDH$ |
| 2.0 | 330 | 291 | 330 | 291 | 330 | 291 | 330 | 291 | 330 | 291 | 345 | 286 | 355 | 282 | 365 | 29 | 375 | 276 |
| 1.5 | 330 | 290 | 330 | 290 | 330 | 290 | 330 | 290 | 330 | 290 | 345 | 285 | 355 | 282 | 365 | 279 | 375 | 275 |
| 1.0 | 330 | 290 | 330 | 290 | 330 | 290 | 330 | 290 | 330 | 290 | **345** | **285** | 355 | 282 | 365 | 278 | 375 | 275 |
| 0.9 | 347 | 290 | 347 | 290 | 347 | 290 | 347 | 290 | 347 | 290 | 362 | 285 | 372 | 282 | 382 | 278 | 392 | 275 |
| 0.8 | 367 | 290 | 367 | 290 | 367 | 290 | 367 | 290 | 367 | 290 | 382 | 285 | 392 | 282 | 402 | 278 | 412 | 275 |
| 0.7 | 391 | 290 | 391 | 290 | 391 | 290 | 391 | 290 | 391 | 290 | 406 | 285 | 416 | 281 | 426 | 278 | 436 | 275 |
| 0.6 | 426 | 290 | 426 | 290 | 426 | 290 | 426 | 290 | 426 | 290 | 441 | 285 | 451 | 282 | 461 | 278 | 471 | 275 |
| 0.5 | 472 | 290 | 472 | 290 | 472 | 290 | 472 | 290 | 472 | 290 | 487 | 285 | 497 | 282 | 507 | 278 | 517 | 275 |
| 0.4 | 522 | 289 | 522 | 289 | 522 | 289 | 522 | 289 | 522 | 289 | 537 | 284 | 547 | 281 | 557 | 278 | 567 | 274 |


Micron Technology, Inc. reserves the right to change products or specifications without notice.
© 2007 Micron Technology, Inc. All rights reserved.

### Table 35: Single-Ended DQS Slew Rate Fully Derated (DQS, DQ at $V_{REF}$) at DDR2-533

Reference points indicated in bold

| | DQS Single-Ended Slew Rate Derated (at $V_{REF}$) | | | | | | | | | | | | | | | | | |
|---|---|---|---|---|---|---|---|---|---|---|---|---|---|---|---|---|---|---|
| | 2.0 V/ns | | 1.8 V/ns | | 1.6 V/ns | | 1.4 V/ns | | 1.2 V/ns | | 1.0 V/ns | | 0.8 V/ns | | 0.6 V/ns | | 0.4 V/ns | |
| DQ (V/ns) | $^tDS$ | $^tDH$ | $^tDS$ | $^tDH$ | $^tDS$ | $^tDH$ | $^tDS$ | $^tDH$ | $^tDS$ | $^tDH$ | $^tDS$ | $^tDH$ | $^tDS$ | $^tDH$ | $^tDS$ | $^tDH$ | $^tDS$ | $^tDH$ |
| 2.0 | 355 | 341 | 355 | 341 | 355 | 341 | 355 | 341 | 355 | 341 | 370 | 336 | 380 | 332 | 390 | 329 | 400 | 326 |
| 1.5 | 364 | 340 | 364 | 340 | 364 | 340 | 364 | 340 | 364 | 340 | 379 | 335 | 389 | 332 | 399 | 329 | 409 | 325 |
| 1.0 | 380 | 340 | 380 | 340 | 380 | 340 | 380 | 340 | 380 | 340 | **395** | **335** | 405 | 332 | 415 | 328 | 425 | 325 |
| 0.9 | 402 | 340 | 402 | 340 | 402 | 340 | 402 | 340 | 402 | 340 | 417 | 335 | 427 | 332 | 437 | 328 | 447 | 325 |
| 0.8 | 429 | 340 | 429 | 340 | 429 | 340 | 429 | 340 | 429 | 340 | 444 | 335 | 454 | 332 | 464 | 328 | 474 | 325 |
| 0.7 | 463 | 340 | 463 | 340 | 463 | 340 | 463 | 340 | 463 | 340 | 478 | 335 | 488 | 331 | 498 | 328 | 508 | 325 |
| 0.6 | 510 | 340 | 510 | 340 | 510 | 340 | 510 | 340 | 510 | 340 | 525 | 335 | 535 | 332 | 545 | 328 | 555 | 325 |
| 0.5 | 572 | 340 | 572 | 340 | 572 | 340 | 572 | 340 | 572 | 340 | 587 | 335 | 597 | 332 | 607 | 328 | 617 | 325 |
| 0.4 | 647 | 339 | 647 | 339 | 647 | 339 | 647 | 339 | 647 | 339 | 662 | 334 | 672 | 331 | 682 | 328 | 692 | 324 |

### Table 36: Single-Ended DQS Slew Rate Fully Derated (DQS, DQ at $V_{REF}$) at DDR2-400

Reference points indicated in bold

| | DQS Single-Ended Slew Rate Derated (at $V_{REF}$) | | | | | | | | | | | | | | | | | |
|---|---|---|---|---|---|---|---|---|---|---|---|---|---|---|---|---|---|---|
| | 2.0 V/ns | | 1.8 V/ns | | 1.6 V/ns | | 1.4 V/ns | | 1.2 V/ns | | 1.0 V/ns | | 0.8 V/ns | | 0.6 V/ns | | 0.4 V/ns | |
| DQ (V/ns) | $^tDS$ | $^tDH$ | $^tDS$ | $^tDH$ | $^tDS$ | $^tDH$ | $^tDS$ | $^tDH$ | $^tDS$ | $^tDH$ | $^tDS$ | $^tDH$ | $^tDS$ | $^tDH$ | $^tDS$ | $^tDH$ | $^tDS$ | $^tDH$ |
| 2.0 | 405 | 391 | 405 | 391 | 405 | 391 | 405 | 391 | 405 | 391 | 420 | 386 | 430 | 382 | 440 | 379 | 450 | 376 |
| 1.5 | 414 | 390 | 414 | 390 | 414 | 390 | 414 | 390 | 414 | 390 | 429 | 385 | 439 | 382 | 449 | 379 | 459 | 375 |
| 1.0 | 430 | 390 | 430 | 390 | 430 | 390 | 430 | 390 | 430 | 390 | **445** | **385** | 455 | 382 | 465 | 378 | 475 | 375 |
| 0.9 | 452 | 390 | 452 | 390 | 452 | 390 | 452 | 390 | 452 | 390 | 467 | 385 | 477 | 382 | 487 | 378 | 497 | 375 |
| 0.8 | 479 | 390 | 479 | 390 | 479 | 390 | 479 | 390 | 479 | 390 | 494 | 385 | 504 | 382 | 514 | 378 | 524 | 375 |
| 0.7 | 513 | 390 | 513 | 390 | 513 | 390 | 513 | 390 | 513 | 390 | 528 | 385 | 538 | 381 | 548 | 378 | 558 | 375 |
| 0.6 | 560 | 390 | 560 | 390 | 560 | 390 | 560 | 390 | 560 | 390 | 575 | 385 | 585 | 382 | 595 | 378 | 605 | 375 |
| 0.5 | 622 | 390 | 622 | 390 | 622 | 390 | 622 | 390 | 622 | 390 | 637 | 385 | 647 | 382 | 657 | 378 | 667 | 375 |
| 0.4 | 697 | 389 | 697 | 389 | 697 | 389 | 697 | 389 | 697 | 389 | 712 | 384 | 722 | 381 | 732 | 378 | 742 | 374 |


Micron Technology, Inc. reserves the right to change products or specifications without notice.
© 2007 Micron Technology, Inc. All rights reserved.

## Figure 28: Nominal Slew Rate for $^{t}DS$

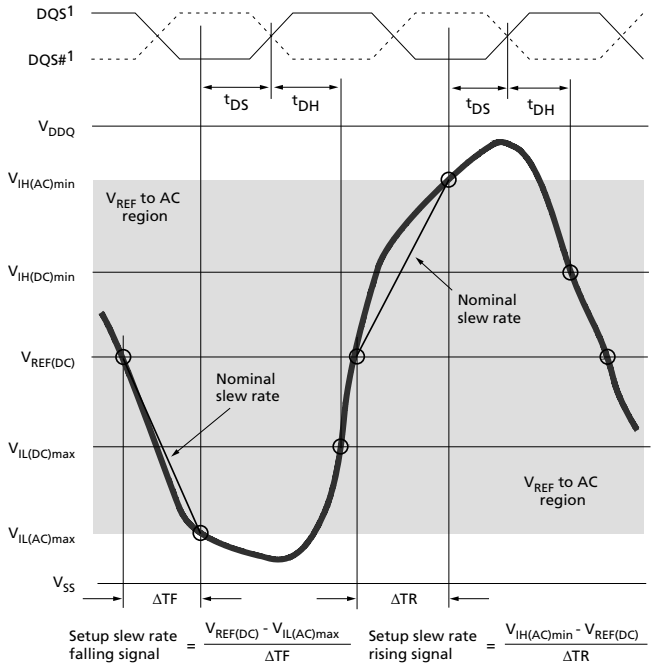


Note: 1. DQS, DQS# signals must be monotonic between $V_{IL(DC)max}$ and $V_{IH(DC)min}$.

## Figure 29: Tangent Line for $^{t}DS$

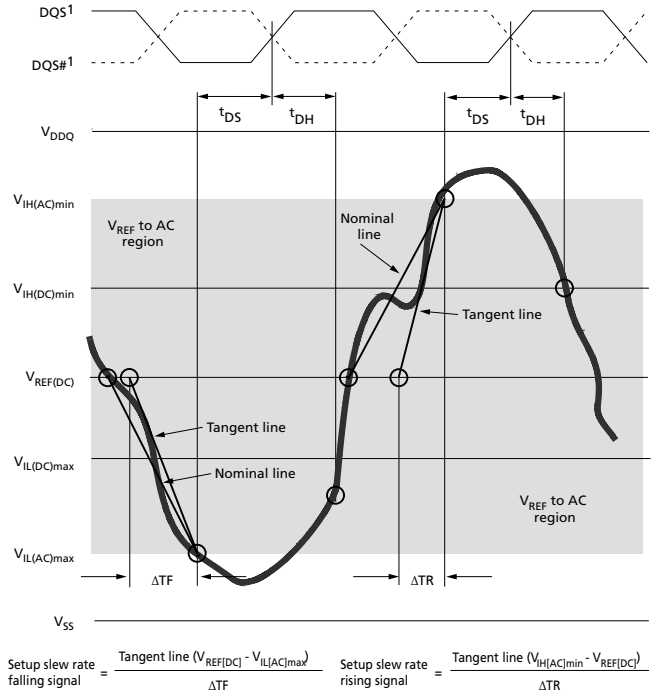


Note: 1. DQS, DQS# signals must be monotonic between $V_{IL(DC)max}$ and $V_{IH(DC)min}$.


Micron Technology, Inc. reserves the right to change products or specifications without notice.
© 2007 Micron Technology, Inc. All rights reserved.

## Figure 30: Nominal Slew Rate for $^{t}DH$

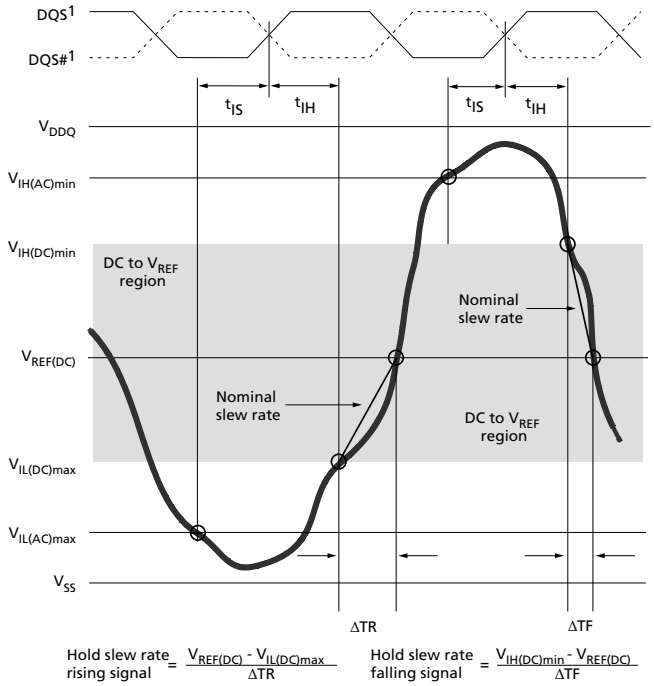


Note: 1. DQS, DQS# signals must be monotonic between $V_{IL(DC)max}$ and $V_{IH(DC)min}$.

## Figure 31: Tangent Line for $^{t}DH$

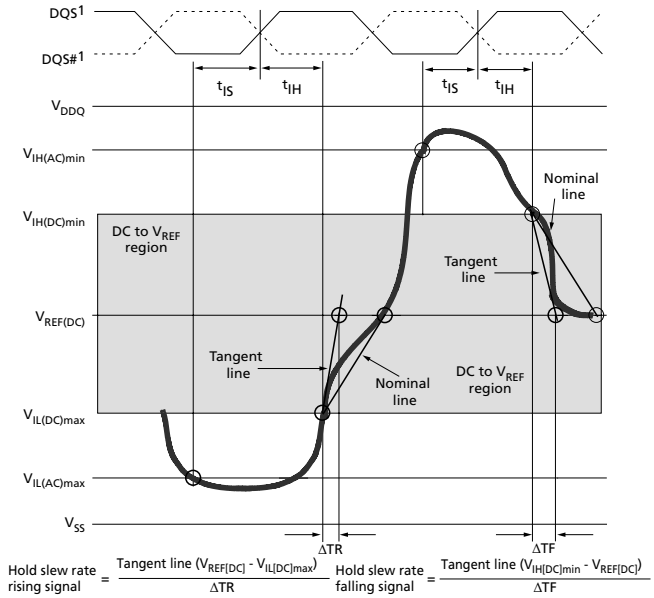


Note: 1. DQS, DQS# signals must be monotonic between $V_{IL(DC)max}$ and $V_{IH(DC)min}$.


Micron Technology, Inc. reserves the right to change products or specifications without notice.
© 2007 Micron Technology, Inc. All rights reserved.

**Figure 32: AC Input Test Signal Waveform Command/Address Balls**

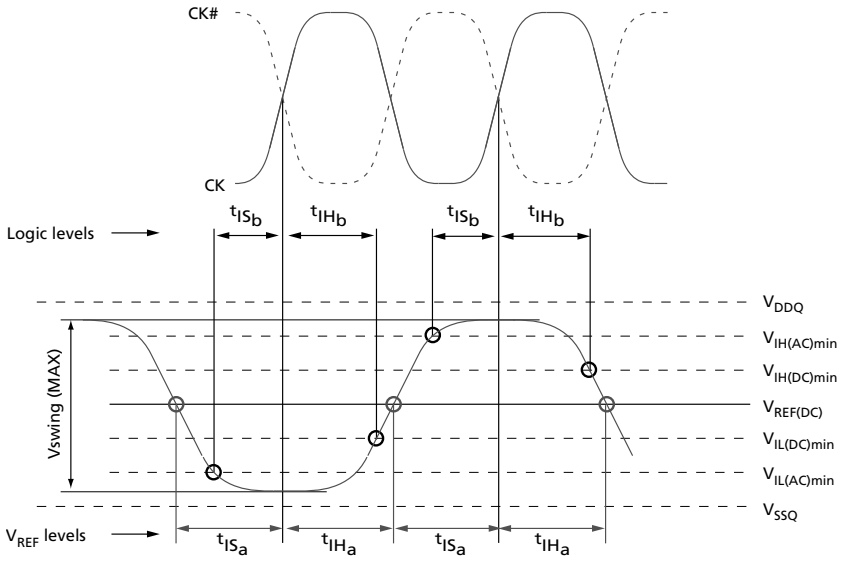


**Figure 33: AC Input Test Signal Waveform for Data with DQS, DQS# (Differential)**

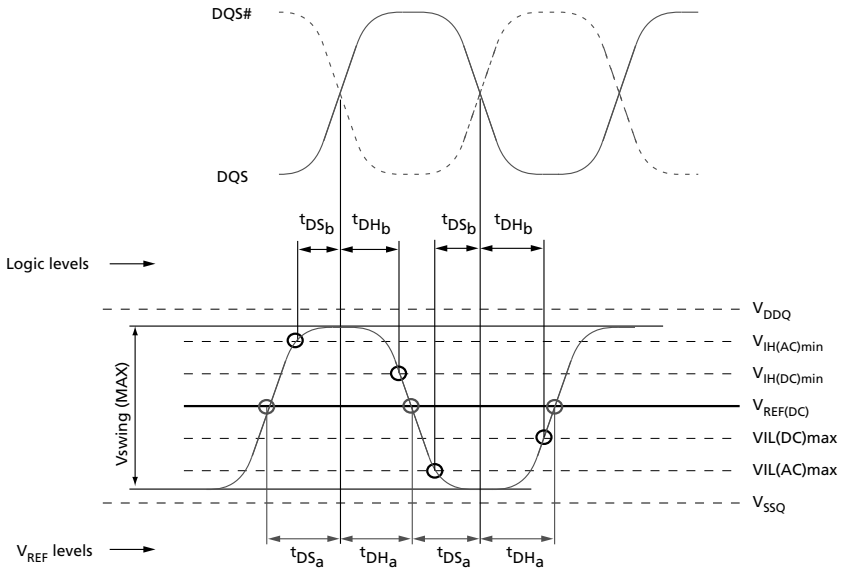



Micron Technology, Inc. reserves the right to change products or specifications without notice.
© 2007 Micron Technology, Inc. All rights reserved.

**Figure 34: AC Input Test Signal Waveform for Data with DQS (Single-Ended)**

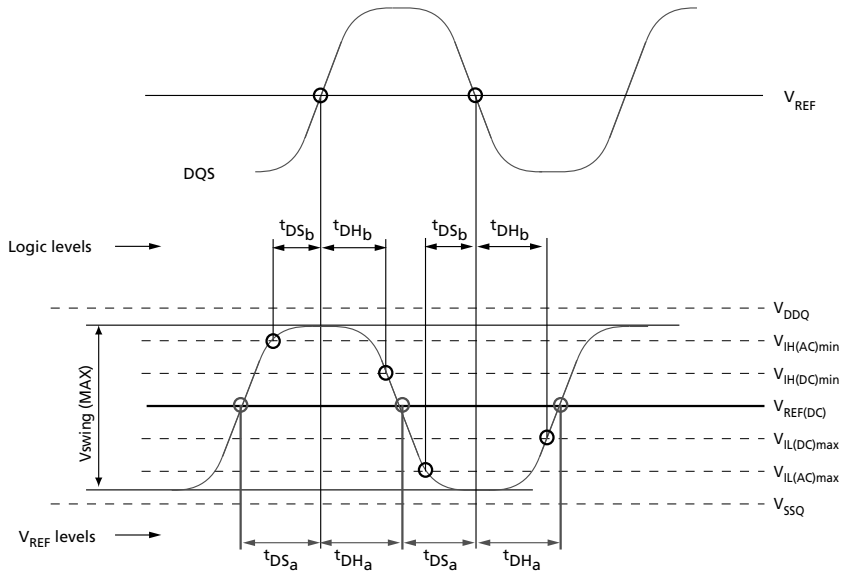


**Figure 35: AC Input Test Signal Waveform (Differential)**

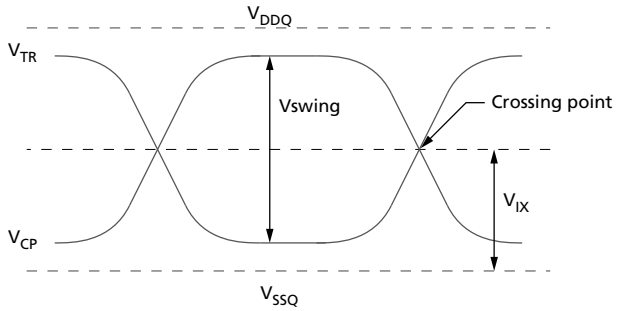



Micron Technology, Inc. reserves the right to change products or specifications without notice.
© 2007 Micron Technology, Inc. All rights reserved.

# Commands

## Truth Tables

The following tables provide a quick reference of available DDR2 SDRAM commands, including CKE power-down modes and bank-to-bank commands.

### Table 37: Truth Table – DDR2 Commands

Notes: 1–3 apply to the entire table

| Function | CKE Previous Cycle | CKE Current Cycle | CS# | RAS# | CAS# | WE# | BA2–BA0 | *An*–A11 | A10 | A9–A0 | Notes |
|---|---|---|---|---|---|---|---|---|---|---|---|
| LOAD MODE | H | H | L | L | L | L | BA | OP code | | | 4, 6 |
| REFRESH | H | H | L | L | L | H | X | X | X | X | |
| SELF REFRESH entry | H | L | L | L | L | H | X | X | X | X | |
| SELF REFRESH exit | L | H | H | X | X | X | X | X | X | X | 4, 7 |
| | | | L | H | H | H | | | | | |
| Single bank PRECHARGE | H | H | L | L | H | L | BA | X | L | X | 6 |
| All banks PRECHARGE | H | H | L | L | H | L | X | X | H | X | |
| Bank ACTIVATE | H | H | L | L | H | H | BA | Row address | | | 4 |
| WRITE | H | H | L | H | L | L | BA | Column address | L | Column address | 4, 5, 6, 8 |
| WRITE with auto precharge | H | H | L | H | L | L | BA | Column address | H | Column address | 4, 5, 6, 8 |
| READ | H | H | L | H | L | H | BA | Column address | L | Column address | 4, 5, 6, 8 |
| READ with auto precharge | H | H | L | H | L | H | BA | Column address | H | Column address | 4, 5, 6, 8 |
| NO OPERATION | H | X | L | H | H | H | X | X | X | X | |
| Device DESELECT | H | X | H | X | X | X | X | X | X | X | |
| Power-down entry | H | L | H | X | X | X | X | X | X | X | 9 |
| | | | L | H | H | H | | | | | |
| Power-down exit | L | H | H | X | X | X | X | X | X | X | 9 |
| | | | L | H | H | H | | | | | |

Notes:
1. All DDR2 SDRAM commands are defined by states of CS#, RAS#, CAS#, WE#, and CKE at the rising edge of the clock.
2. The state of ODT does not affect the states described in this table. The ODT function is not available during self refresh. See ODT Timing (page 134) for details.
3. "X" means "H or L" (but a defined logic level) for valid $I_{DD}$ measurements.
4. BA2 is only applicable for densities ≥1Gb.
5. An *n* is the most significant address bit for a given density and configuration. Some larger address bits may be "Don't Care" during column addressing, depending on density and configuration.


Micron Technology, Inc. reserves the right to change products or specifications without notice.
© 2007 Micron Technology, Inc. All rights reserved.

6. Bank addresses (BA) determine which bank is to be operated upon. BA during a LOAD MODE command selects which mode register is programmed.
7. SELF REFRESH exit is asynchronous.
8. Burst reads or writes at BL = 4 cannot be terminated or interrupted. See Figure 49 (page 101) and Figure 61 (page 113) for other restrictions and details.
9. The power-down mode does not perform any REFRESH operations. The duration of power-down is limited by the refresh requirements outlined in the AC parametric section.

**Table 38: Truth Table – Current State Bank *n* – Command to Bank *n***

Notes: 1–6 apply to the entire table

| Current State | CS# | RAS# | CAS# | WE# | Command/Action | Notes |
|---|---|---|---|---|---|---|
| Any | H | X | X | X | DESELECT (NOP/continue previous operation) | |
| | L | H | H | H | NO OPERATION (NOP/continue previous operation) | |
| Idle | L | L | H | H | ACTIVATE (select and activate row) | |
| | L | L | L | H | REFRESH | 7 |
| | L | L | L | L | LOAD MODE | 7 |
| Row active | L | H | L | H | READ (select column and start READ burst) | 8 |
| | L | H | L | L | WRITE (select column and start WRITE burst) | 8 |
| | L | L | H | L | PRECHARGE (deactivate row in bank or banks) | 9 |
| Read (auto precharge disabled) | L | H | L | H | READ (select column and start new READ burst) | 8 |
| | L | H | L | L | WRITE (select column and start WRITE burst) | 8, 10 |
| | L | L | H | L | PRECHARGE (start PRECHARGE) | 9 |
| Write (auto precharge disabled) | L | H | L | H | READ (select column and start READ burst) | 8 |
| | L | H | L | L | WRITE (select column and start new WRITE burst) | 8 |
| | L | L | H | L | PRECHARGE (start PRECHARGE) | 9 |

Notes:
1. This table applies when CKE*n* - 1 was HIGH and CKE*n* is HIGH and after $^{t}$XSNR has been met (if the previous state was self refresh).
2. This table is bank-specific, except where noted (the current state is for a specific bank and the commands shown are those allowed to be issued to that bank when in that state). Exceptions are covered in the notes below.
3. Current state definitions:

   **Idle:** The bank has been precharged, $^{t}$RP has been met, and any READ burst is complete.

   **Row active:** A row in the bank has been activated, and $^{t}$RCD has been met. No data bursts/accesses and no register accesses are in progress.

   **Read:** A READ burst has been initiated, with auto precharge disabled and has not yet terminated.

   **Write:** A WRITE burst has been initiated with auto precharge disabled and has not yet terminated.
4. The following states must not be interrupted by a command issued to the same bank. Issue DESELECT or NOP commands, or allowable commands to the other bank, on any clock edge occurring during these states. Allowable commands to the other bank are determined by its current state and this table, and according to Table 39 (page 77).


Micron Technology, Inc. reserves the right to change products or specifications without notice.
© 2007 Micron Technology, Inc. All rights reserved.

| | |
|---|---|
| **Precharge:** | Starts with registration of a PRECHARGE command and ends when $^{t}$RP is met. After $^{t}$RP is met, the bank will be in the idle state. |
| **Read with auto precharge enabled:** | Starts with registration of a READ command with auto precharge enabled and ends when $^{t}$RP has been met. After $^{t}$RP is met, the bank will be in the idle state. |
| **Row activate:** | Starts with registration of an ACTIVATE command and ends when $^{t}$RCD is met. After $^{t}$RCD is met, the bank will be in the row active state. |
| **Write with auto precharge enabled:** | Starts with registration of a WRITE command with auto precharge enabled and ends when $^{t}$RP has been met. After $^{t}$RP is met, the bank will be in the idle state. |

5. The following states must not be interrupted by any executable command (DESELECT or NOP commands must be applied on each positive clock edge during these states):

| | |
|---|---|
| **Refresh:** | Starts with registration of a REFRESH command and ends when $^{t}$RFC is met. After $^{t}$RFC is met, the DDR2 SDRAM will be in the all banks idle state. |
| **Accessing mode register:** | Starts with registration of the LOAD MODE command and ends when $^{t}$MRD has been met. After $^{t}$MRD is met, the DDR2 SDRAM will be in the all banks idle state. |
| **Precharge all:** | Starts with registration of a PRECHARGE ALL command and ends when $^{t}$RP is met. After $^{t}$RP is met, all banks will be in the idle state. |

6. All states and sequences not shown are illegal or reserved.
7. Not bank-specific; requires that all banks are idle and bursts are not in progress.
8. READs or WRITEs listed in the Command/Action column include READs or WRITEs with auto precharge enabled and READs or WRITEs with auto precharge disabled.
9. May or may not be bank-specific; if multiple banks are to be precharged, each must be in a valid state for precharging.
10. A WRITE command may be applied after the completion of the READ burst.


Micron Technology, Inc. reserves the right to change products or specifications without notice.
© 2007 Micron Technology, Inc. All rights reserved.

**Table 39: Truth Table – Current State Bank *n* – Command to Bank *m***

Notes: 1–6 apply to the entire table

| Current State | CS# | RAS# | CAS# | WE# | Command/Action | Notes |
|---|---|---|---|---|---|---|
| Any | H | X | X | X | DESELECT (NOP/continue previous operation) | |
| | L | H | H | H | NO OPERATION (NOP/continue previous operation) | |
| Idle | X | X | X | X | Any command otherwise allowed to bank *m* | |
| Row active, active, or precharge | L | L | H | H | ACTIVATE (select and activate row) | |
| | L | H | L | H | READ (select column and start READ burst) | 7 |
| | L | H | L | L | WRITE (select column and start WRITE burst) | 7 |
| | L | L | H | L | PRECHARGE | |
| Read (auto precharge disabled) | L | L | H | H | ACTIVATE (select and activate row) | |
| | L | H | L | H | READ (select column and start new READ burst) | 7 |
| | L | H | L | L | WRITE (select column and start WRITE burst) | 7, 8 |
| | L | L | H | L | PRECHARGE | |
| Write (auto precharge disabled) | L | L | H | H | ACTIVATE (select and activate row) | |
| | L | H | L | H | READ (select column and start READ burst) | 7, 9, 10 |
| | L | H | L | L | WRITE (select column and start new WRITE burst) | 7 |
| | L | L | H | L | PRECHARGE | |
| Read (with auto precharge) | L | L | H | H | ACTIVATE (select and activate row) | |
| | L | H | L | H | READ (select column and start new READ burst) | 7 |
| | L | H | L | L | WRITE (select column and start WRITE burst) | 7, 8 |
| | L | L | H | L | PRECHARGE | |
| Write (with auto precharge) | L | L | H | H | ACTIVATE (select and activate row) | |
| | L | H | L | H | READ (select column and start READ burst) | 7, 10 |
| | L | H | L | L | WRITE (select column and start new WRITE burst) | 7 |
| | L | L | H | L | PRECHARGE | |

Notes:
1. This table applies when CKE*n* - 1 was HIGH and CKE*n* is HIGH and after $^{t}$XSNR has been met (if the previous state was self refresh).
2. This table describes an alternate bank operation, except where noted (the current state is for bank *n* and the commands shown are those allowed to be issued to bank *m*, assuming that bank m is in such a state that the given command is allowable). Exceptions are covered in the notes below.
3. Current state definitions:

**Idle:** The bank has been precharged, $^{t}$RP has been met, and any READ burst is complete.

**Row active:** A row in the bank has been activated and $^{t}$RCD has been met. No data bursts/accesses and no register accesses are in progress.

**Read:** A READ burst has been initiated with auto precharge disabled and has not yet terminated.

**Write:** A WRITE burst has been initiated with auto precharge disabled and has not yet terminated.


Micron Technology, Inc. reserves the right to change products or specifications without notice.
© 2007 Micron Technology, Inc. All rights reserved.

**READ with auto precharge enabled/ WRITE with auto precharge enabled:** The READ with auto precharge enabled or WRITE with auto precharge enabled states can each be broken into two parts: the access period and the precharge period. For READ with auto precharge, the precharge period is defined as if the same burst was executed with auto precharge disabled and then followed with the earliest possible PRECHARGE command that still accesses all of the data in the burst. For WRITE with auto precharge, the precharge period begins when $^{t}$WR ends, with $^{t}$WR measured as if auto precharge was disabled. The access period starts with registration of the command and ends where the precharge period (or $^{t}$RP) begins. This device supports concurrent auto precharge such that when a READ with auto precharge is enabled or a WRITE with auto precharge is enabled, any command to other banks is allowed, as long as that command does not interrupt the read or write data transfer already in process. In either case, all other related limitations apply (contention between read data and write data must be avoided).

The minimum delay from a READ or WRITE command with auto precharge enabled to a command to a different bank is summarized in Table 40 (page 78).

4. REFRESH and LOAD MODE commands may only be issued when all banks are idle.
5. Not used.
6. All states and sequences not shown are illegal or reserved.
7. READs or WRITEs listed in the Command/Action column include READs or WRITEs with auto precharge enabled and READs or WRITEs with auto precharge disabled.
8. A WRITE command may be applied after the completion of the READ burst.
9. Requires appropriate DM.
10. The number of clock cycles required to meet $^{t}$WTR is either two or $^{t}$WTR/$^{t}$CK, whichever is greater.

**Table 40: Minimum Delay with Auto Precharge Enabled**

| From Command (Bank *n*) | To Command (Bank *m*) | Minimum Delay (with Concurrent Auto Precharge) | Units |
|---|---|---|---|
| WRITE with auto precharge | READ or READ with auto precharge | (CL - 1) + (BL/2) + $^{t}$WTR | $^{t}$CK |
| | WRITE or WRITE with auto precharge | (BL/2) | $^{t}$CK |
| | PRECHARGE or ACTIVATE | 1 | $^{t}$CK |
| READ with auto precharge | READ or READ with auto precharge | (BL/2) | $^{t}$CK |
| | WRITE or WRITE with auto precharge | (BL/2) + 2 | $^{t}$CK |
| | PRECHARGE or ACTIVATE | 1 | $^{t}$CK |

## DESELECT

The DESELECT function (CS# HIGH) prevents new commands from being executed by the DDR2 SDRAM. The DDR2 SDRAM is effectively deselected. Operations already in progress are not affected. DESELECT is also referred to as COMMAND INHIBIT.


Micron Technology, Inc. reserves the right to change products or specifications without notice.
© 2007 Micron Technology, Inc. All rights reserved.

## NO OPERATION (NOP)

The NO OPERATION (NOP) command is used to instruct the selected DDR2 SDRAM to perform a NOP (CS# is LOW; RAS#, CAS#, and WE are HIGH). This prevents unwanted commands from being registered during idle or wait states. Operations already in progress are not affected.

## LOAD MODE (LM)

The mode registers are loaded via bank address and address inputs. The bank address balls determine which mode register will be programmed. See Mode Register (MR) (page 81). The LM command can only be issued when all banks are idle, and a subsequent executable command cannot be issued until $^{t}$MRD is met.

## ACTIVATE

The ACTIVATE command is used to open (or activate) a row in a particular bank for a subsequent access. The value on the bank address inputs determines the bank, and the address inputs select the row. This row remains active (or open) for accesses until a precharge command is issued to that bank. A precharge command must be issued before opening a different row in the same bank.

## READ

The READ command is used to initiate a burst read access to an active row. The value on the bank address inputs determine the bank, and the address provided on address inputs A0–A*i* (where A*i* is the most significant column address bit for a given configuration) selects the starting column location. The value on input A10 determines whether or not auto precharge is used. If auto precharge is selected, the row being accessed will be precharged at the end of the read burst; if auto precharge is not selected, the row will remain open for subsequent accesses.

DDR2 SDRAM also supports the AL feature, which allows a READ or WRITE command to be issued prior to $^{t}$RCD (MIN) by delaying the actual registration of the READ/WRITE command to the internal device by AL clock cycles.

## WRITE

The WRITE command is used to initiate a burst write access to an active row. The value on the bank select inputs selects the bank, and the address provided on inputs A0–A*i* (where A*i* is the most significant column address bit for a given configuration) selects the starting column location. The value on input A10 determines whether or not auto precharge is used. If auto precharge is selected, the row being accessed will be precharged at the end of the WRITE burst; if auto precharge is not selected, the row will remain open for subsequent accesses.

DDR2 SDRAM also supports the AL feature, which allows a READ or WRITE command to be issued prior to $^{t}$RCD (MIN) by delaying the actual registration of the READ/WRITE command to the internal device by AL clock cycles.

Input data appearing on the DQ is written to the memory array subject to the DM input logic level appearing coincident with the data. If a given DM signal is registered LOW, the corresponding data will be written to memory; if the DM signal is registered HIGH, the corresponding data inputs will be ignored, and a WRITE will not be executed to that byte/column location (see Figure 66 (page 118)).


Micron Technology, Inc. reserves the right to change products or specifications without notice.
© 2007 Micron Technology, Inc. All rights reserved.

## PRECHARGE

The PRECHARGE command is used to deactivate the open row in a particular bank or the open row in all banks. The bank(s) will be available for a subsequent row activation a specified time ($^{t}$RP) after the PRECHARGE command is issued, except in the case of concurrent auto precharge, where a READ or WRITE command to a different bank is allowed as long as it does not interrupt the data transfer in the current bank and does not violate any other timing parameters. After a bank has been precharged, it is in the idle state and must be activated prior to any READ or WRITE commands being issued to that bank. A PRECHARGE command is allowed if there is no open row in that bank (idle state) or if the previously open row is already in the process of precharging. However, the precharge period will be determined by the last PRECHARGE command issued to the bank.

## REFRESH

REFRESH is used during normal operation of the DDR2 SDRAM and is analogous to CAS#-before-RAS# (CBR) REFRESH. All banks must be in the idle mode prior to issuing a REFRESH command. This command is nonpersistent, so it must be issued each time a refresh is required. The addressing is generated by the internal refresh controller. This makes the address bits a “Don’t Care” during a REFRESH command.

## SELF REFRESH

The SELF REFRESH command can be used to retain data in the DDR2 SDRAM, even if the rest of the system is powered down. When in the self refresh mode, the DDR2 SDRAM retains data without external clocking. All power supply inputs (including Vref) must be maintained at valid levels upon entry/exit *and* during SELF REFRESH operation.

The SELF REFRESH command is initiated like a REFRESH command except CKE is LOW. The DLL is automatically disabled upon entering self refresh and is automatically enabled upon exiting self refresh.


Micron Technology, Inc. reserves the right to change products or specifications without notice.
© 2007 Micron Technology, Inc. All rights reserved.

# Mode Register (MR)

The mode register is used to define the specific mode of operation of the DDR2 SDRAM. This definition includes the selection of a burst length, burst type, CAS latency, operating mode, DLL RESET, write recovery, and power-down mode, as shown in Figure 36 (page 82). Contents of the mode register can be altered by re-executing the LOAD MODE (LM) command. If the user chooses to modify only a subset of the MR variables, all variables must be programmed when the command is issued.

The MR is programmed via the LM command and will retain the stored information until it is programmed again or until the device loses power (except for bit M8, which is self-clearing). Reprogramming the mode register will not alter the contents of the memory array, provided it is performed correctly.

The LM command can only be issued (or reissued) when all banks are in the precharged state (idle state) and no bursts are in progress. The controller must wait the specified time $^{t}$MRD before initiating any subsequent operations such as an ACTIVATE command. Violating either of these requirements will result in an unspecified operation.

## Burst Length

Burst length is defined by bits M0–M2, as shown in Figure 36. Read and write accesses to the DDR2 SDRAM are burst-oriented, with the burst length being programmable to either four or eight. The burst length determines the maximum number of column locations that can be accessed for a given READ or WRITE command.

When a READ or WRITE command is issued, a block of columns equal to the burst length is effectively selected. All accesses for that burst take place within this block, meaning that the burst will wrap within the block if a boundary is reached. The block is uniquely selected by A2–A*i* when BL = 4 and by A3–A*i* when BL = 8 (where A*i* is the most significant column address bit for a given configuration). The remaining (least significant) address bit(s) is (are) used to select the starting location within the block. The programmed burst length applies to both read and write bursts.


Micron Technology, Inc. reserves the right to change products or specifications without notice.
© 2007 Micron Technology, Inc. All rights reserved.

**Figure 36: MR Definition**

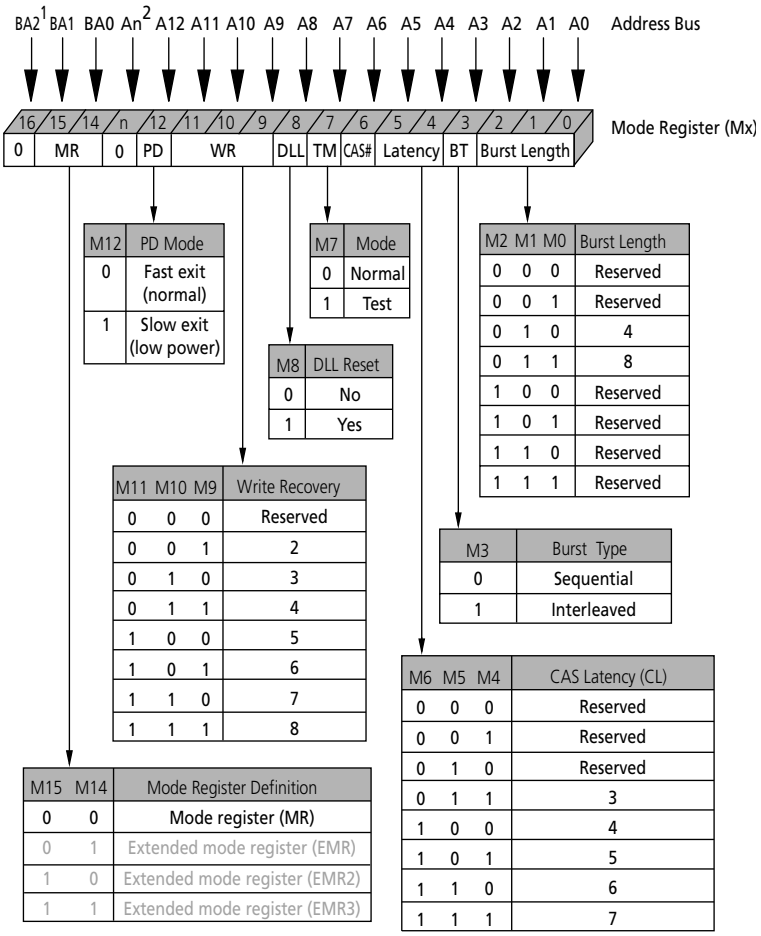


Notes:
1. M16 (BA2) is only applicable for densities ≥1Gb, reserved for future use, and must be programmed to "0."
2. Mode bits (M*n*) with corresponding address balls (A*n*) greater than M12 (A12) are reserved for future use and must be programmed to "0."
3. Not all listed WR and CL options are supported in any individual speed grade.


Micron Technology, Inc. reserves the right to change products or specifications without notice.
© 2007 Micron Technology, Inc. All rights reserved.

## Burst Type

Accesses within a given burst may be programmed to be either sequential or interleaved. The burst type is selected via bit M3, as shown in Figure 36. The ordering of accesses within a burst is determined by the burst length, the burst type, and the starting column address, as shown in Table 41. DDR2 SDRAM supports 4-bit burst mode and 8-bit burst mode only. For 8-bit burst mode, full interleaved address ordering is supported; however, sequential address ordering is nibble-based.

**Table 41: Burst Definition**

| Burst Length | Starting Column Address (A2, A1, A0) | Order of Accesses Within a Burst | |
|---|---|---|---|
| | | Burst Type = Sequential | Burst Type = Interleaved |
| 4 | 0 0 0 | 0, 1, 2, 3 | 0, 1, 2, 3 |
| | 0 0 1 | 1, 2, 3, 0 | 1, 0, 3, 2 |
| | 0 1 0 | 2, 3, 0, 1 | 2, 3, 0, 1 |
| | 0 1 1 | 3, 0, 1, 2 | 3, 2, 1, 0 |
| 8 | 0 0 0 | 0, 1, 2, 3, 4, 5, 6, 7 | 0, 1, 2, 3, 4, 5, 6, 7 |
| | 0 0 1 | 1, 2, 3, 0, 5, 6, 7, 4 | 1, 0, 3, 2, 5, 4, 7, 6 |
| | 0 1 0 | 2, 3, 0, 1, 6, 7, 4, 5 | 2, 3, 0, 1, 6, 7, 4, 5 |
| | 0 1 1 | 3, 0, 1, 2, 7, 4, 5, 6 | 3, 2, 1, 0, 7, 6, 5, 4 |
| | 1 0 0 | 4, 5, 6, 7, 0, 1, 2, 3 | 4, 5, 6, 7, 0, 1, 2, 3 |
| | 1 0 1 | 5, 6, 7, 4, 1, 2, 3, 0 | 5, 4, 7, 6, 1, 0, 3, 2 |
| | 1 1 0 | 6, 7, 4, 5, 2, 3, 0, 1 | 6, 7, 4, 5, 2, 3, 0, 1 |
| | 1 1 1 | 7, 4, 5, 6, 3, 0, 1, 2 | 7, 6, 5, 4, 3, 2, 1, 0 |

## Operating Mode

The normal operating mode is selected by issuing a command with bit M7 set to “0,” and all other bits set to the desired values, as shown in Figure 36 (page 82). When bit M7 is “1,” no other bits of the mode register are programmed. Programming bit M7 to “1” places the DDR2 SDRAM into a test mode that is only used by the manufacturer and should *not* be used. No operation or functionality is guaranteed if M7 bit is “1.”

## DLL RESET

DLL RESET is defined by bit M8, as shown in Figure 36. Programming bit M8 to “1” will activate the DLL RESET function. Bit M8 is self-clearing, meaning it returns back to a value of “0” after the DLL RESET function has been issued.

Anytime the DLL RESET function is used, 200 clock cycles must occur before a READ command can be issued to allow time for the internal clock to be synchronized with the external clock. Failing to wait for synchronization to occur may result in a violation of the $^{t}$AC or $^{t}$DQSCK parameters.

## Write Recovery

Write recovery (WR) time is defined by bits M9–M11, as shown in Figure 36 (page 82). The WR register is used by the DDR2 SDRAM during WRITE with auto precharge operation. During WRITE with auto precharge operation, the DDR2 SDRAM delays the inter-


Micron Technology, Inc. reserves the right to change products or specifications without notice.
© 2007 Micron Technology, Inc. All rights reserved.

nal auto precharge operation by WR clocks (programmed in bits M9–M11) from the last data burst. An example of WRITE with auto precharge is shown in Figure 65 (page 117).

WR values of 2, 3, 4, 5, 6, 7, or 8 clocks may be used for programming bits M9–M11. The user is required to program the value of WR, which is calculated by dividing $^{t}$WR (in nanoseconds) by $^{t}$CK (in nanoseconds) and rounding up a noninteger value to the next integer; WR (cycles) = $^{t}$WR (ns)/$^{t}$CK (ns). Reserved states should not be used as an unknown operation or incompatibility with future versions may result.

## Power-Down Mode

Active power-down (PD) mode is defined by bit M12, as shown in Figure 36. PD mode enables the user to determine the active power-down mode, which determines performance versus power savings. PD mode bit M12 does not apply to precharge PD mode.

When bit M12 = 0, standard active PD mode, or "fast-exit" active PD mode, is enabled. The $^{t}$XARD parameter is used for fast-exit active PD exit timing. The DLL is expected to be enabled and running during this mode.

When bit M12 = 1, a lower-power active PD mode, or "slow-exit" active PD mode, is enabled. The $^{t}$XARDS parameter is used for slow-exit active PD exit timing. The DLL can be enabled but "frozen" during active PD mode because the exit-to-READ command timing is relaxed. The power difference expected between $I_{DD3P}$ normal and $I_{DD3P}$ low-power mode is defined in the DDR2 $I_{DD}$ Specifications and Conditions table.

## CAS Latency (CL)

The CAS latency (CL) is defined by bits M4–M6, as shown in Figure 36 (page 82). CL is the delay, in clock cycles, between the registration of a READ command and the availability of the first bit of output data. The CL can be set to 3, 4, 5, 6, or 7 clocks, depending on the speed grade option being used.

DDR2 SDRAM does not support any half-clock latencies. Reserved states should not be used as an unknown operation otherwise incompatibility with future versions may result.

DDR2 SDRAM also supports a feature called posted CAS additive latency (AL). This feature allows the READ command to be issued prior to $^{t}$RCD (MIN) by delaying the internal command to the DDR2 SDRAM by AL clocks. The AL feature is described in further detail in Posted CAS Additive Latency (AL) (page 88).

Examples of CL = 3 and CL = 4 are shown in Figure 37; both assume AL = 0. If a READ command is registered at clock edge *n*, and the CL is *m* clocks, the data will be available nominally coincident with clock edge *n* + *m* (this assumes AL = 0).


Micron Technology, Inc. reserves the right to change products or specifications without notice.
© 2007 Micron Technology, Inc. All rights reserved.

**Figure 37: CL**

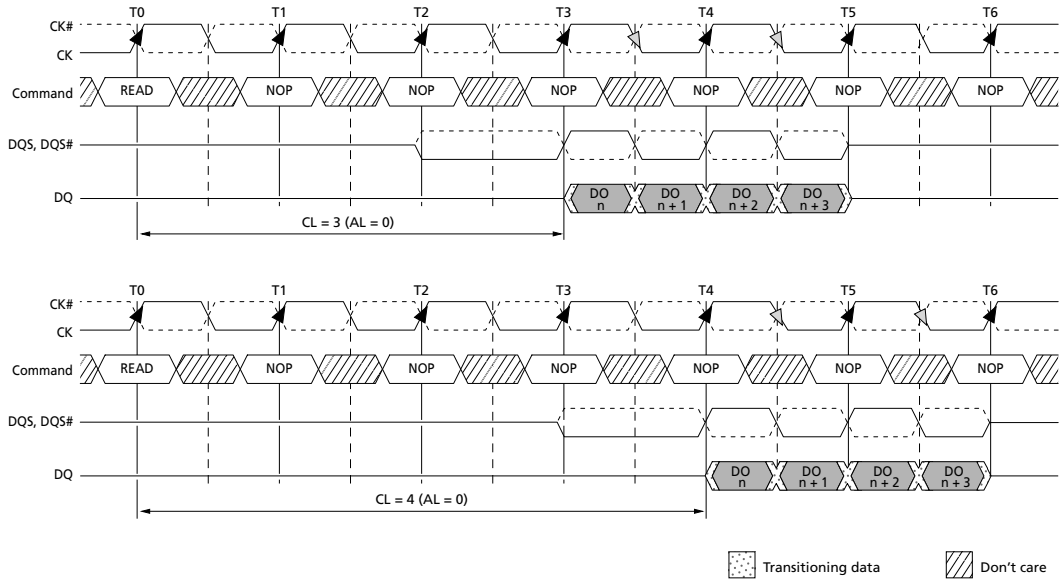


Notes:
1. BL = 4.
2. Posted CAS# additive latency (AL) = 0.
3. Shown with nominal $^{t}$AC, $^{t}$DQSCK, and $^{t}$DQSQ.


Micron Technology, Inc. reserves the right to change products or specifications without notice.
© 2007 Micron Technology, Inc. All rights reserved.

# Extended Mode Register (EMR)

The extended mode register controls functions beyond those controlled by the mode register; these additional functions are DLL enable/disable, output drive strength, on-die termination (ODT), posted AL, off-chip driver impedance calibration (OCD), DQS# enable/disable, RDQS/RDQS# enable/disable, and output disable/enable. These functions are controlled via the bits shown in Figure 38. The EMR is programmed via the LM command and will retain the stored information until it is programmed again or the device loses power. Reprogramming the EMR will not alter the contents of the memory array, provided it is performed correctly.

The EMR must be loaded when all banks are idle and no bursts are in progress, and the controller must wait the specified time $^{t}$MRD before initiating any subsequent operation. Violating either of these requirements could result in an unspecified operation.

**Figure 38: EMR Definition**

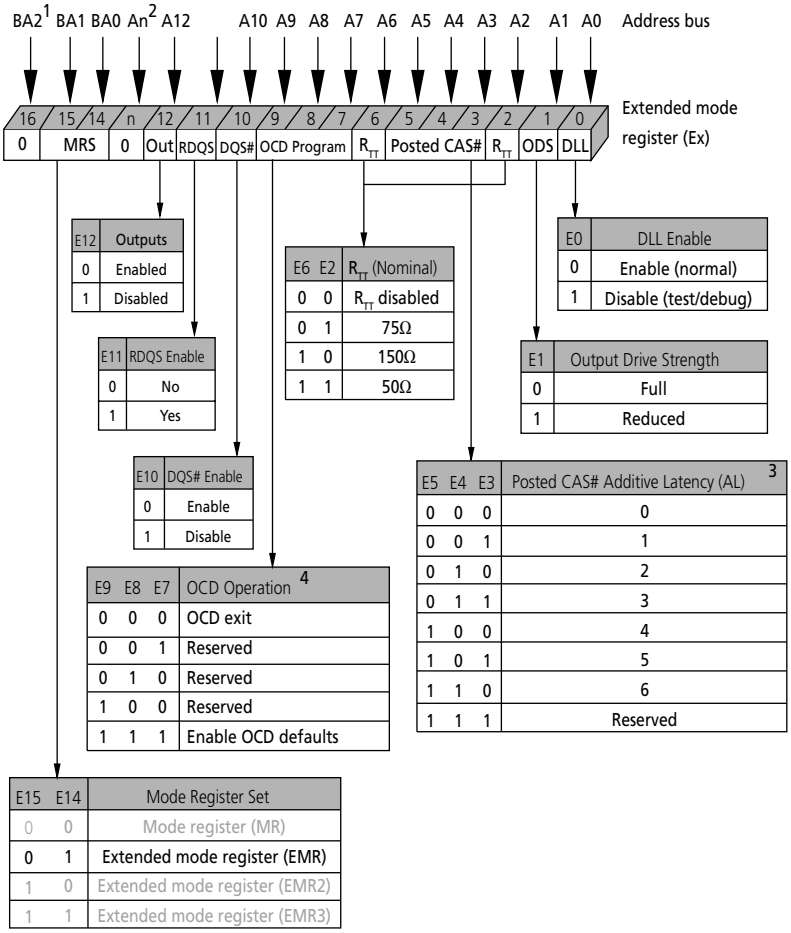


Notes:
1. E16 (BA2) is only applicable for densities ≥1Gb, reserved for future use, and must be programmed to 0.
2. Mode bits (E*n*) with corresponding address balls (A*n*) greater than E12 (A12) are reserved for future use and must be programmed to 0.
3. Not all listed AL options are supported in any individual speed grade.


Micron Technology, Inc. reserves the right to change products or specifications without notice.
© 2007 Micron Technology, Inc. All rights reserved.

4. As detailed in the Initialization section notes, during initialization of the OCD operation, all three bits must be set to 1 for the OCD default state, then set to 0 before initialization is finished.

## DLL Enable/Disable

The DLL may be enabled or disabled by programming bit E0 during the LM command, as shown in Figure 38 (page 86). These specifications are applicable when the DLL is enabled for normal operation. DLL enable is required during power-up initialization and upon returning to normal operation after having disabled the DLL for the purpose of debugging or evaluation. Enabling the DLL should always be followed by resetting the DLL using the LM command.

The DLL is automatically disabled when entering SELF REFRESH operation and is automatically re-enabled and reset upon exit of SELF REFRESH operation.

Anytime the DLL is enabled (and subsequently reset), 200 clock cycles must occur before a READ command can be issued to allow time for the internal clock to synchronize with the external clock. Failing to wait for synchronization to occur may result in a violation of the $^{t}$AC or $^{t}$DQSCK parameters.

Anytime the DLL is disabled and the device is operated below 25 MHz, any AUTO REFRESH command should be followed by a PRECHARGE ALL command.

## Output Drive Strength

The output drive strength is defined by bit E1, as shown in Figure 38. The normal drive strength for all outputs is specified to be SSTL_18. Programming bit E1 = 0 selects normal (full strength) drive strength for all outputs. Selecting a reduced drive strength option (E1 = 1) will reduce all outputs to approximately 45 to 60 percent of the SSTL_18 drive strength. This option is intended for the support of lighter load and/or point-to-point environments.

## DQS# Enable/Disable

The DQS# ball is enabled by bit E10. When E10 = 0, DQS# is the complement of the differential data strobe pair DQS/DQS#. When disabled (E10 = 1), DQS is used in a single-ended mode and the DQS# ball is disabled. When disabled, DQS# should be left floating; however, it may be tied to ground via a 20Ω to 10kΩ resistor. This function is also used to enable/disable RDQS#. If RDQS is enabled (E11 = 1) and DQS# is enabled (E10 = 0), then both DQS# and RDQS# will be enabled.

## RDQS Enable/Disable

The RDQS ball is enabled by bit E11, as shown in Figure 38. This feature is only applicable to the x8 configuration. When enabled (E11 = 1), RDQS is identical in function and timing to data strobe DQS during a READ. During a WRITE operation, RDQS is ignored by the DDR2 SDRAM.

## Output Enable/Disable

The OUTPUT ENABLE function is defined by bit E12, as shown in Figure 38. When enabled (E12 = 0), all outputs (DQ, DQS, DQS#, RDQS, RDQS#) function normally. When disabled (E12 = 1), all outputs (DQ, DQS, DQS#, RDQS, RDQS#) are disabled, thus re-


Micron Technology, Inc. reserves the right to change products or specifications without notice.
© 2007 Micron Technology, Inc. All rights reserved.

moving output buffer current. The output disable feature is intended to be used during $I_{DD}$ characterization of read current.

## On-Die Termination (ODT)

ODT effective resistance, $R_{TT(EFF)}$, is defined by bits E2 and E6 of the EMR, as shown in Figure 38 (page 86). The ODT feature is designed to improve signal integrity of the memory channel by allowing the DDR2 SDRAM controller to independently turn on/off ODT for any or all devices. $R_{TT}$ effective resistance values of 50Ω, 75Ω, and 150Ω are selectable and apply to each DQ, DQS/DQS#, RDQS/RDQS#, UDQS/UDQS#, LDQS/LDQS#, DM, and UDM/LDM signal. Bits (E6, E2) determine what ODT resistance is enabled by turning on/off sw1, sw2, or sw3. The ODT effective resistance value is selected by enabling switch sw1, which enables all R1 values that are 150Ω each, enabling an effective resistance of 75Ω ($R_{TT2\ [EFF]}$ = R2/2). Similarly, if sw2 is enabled, all R2 values that are 300Ω each, enable an effective ODT resistance of 150Ω ($R_{TT2[EFF]}$ = R2/2). Switch sw3 enables R1 values of 100Ω, enabling effective resistance of 50Ω. Reserved states should not be used, as an unknown operation or incompatibility with future versions may result.

The ODT control ball is used to determine when $R_{TT(EFF)}$ is turned on and off, assuming ODT has been enabled via bits E2 and E6 of the EMR. The ODT feature and ODT input ball are only used during active, active power-down (both fast-exit and slow-exit modes), and precharge power-down modes of operation.

ODT must be turned off prior to entering self refresh mode. During power-up and initialization of the DDR2 SDRAM, ODT should be disabled until the EMR command is issued. This will enable the ODT feature, at which point the ODT ball will determine the $R_{TT(EFF)}$ value. Anytime the EMR enables the ODT function, ODT may not be driven HIGH until eight clocks after the EMR has been enabled (see Figure 81 (page 135) for ODT timing diagrams).

## Off-Chip Driver (OCD) Impedance Calibration

The OFF-CHIP DRIVER function is an optional DDR2 JEDEC feature not supported by Micron and thereby must be set to the default state. Enabling OCD beyond the default settings will alter the I/O drive characteristics and the timing and output I/O specifications will no longer be valid (see Initialization section for proper setting of OCD defaults).

## Posted CAS Additive Latency (AL)

Posted CAS additive latency (AL) is supported to make the command and data bus efficient for sustainable bandwidths in DDR2 SDRAM. Bits E3–E5 define the value of AL, as shown in Figure 38. Bits E3–E5 allow the user to program the DDR2 SDRAM with an AL of 0, 1, 2, 3, 4, 5, or 6 clocks. Reserved states should not be used as an unknown operation or incompatibility with future versions may result.

In this operation, the DDR2 SDRAM allows a READ or WRITE command to be issued prior to $^{t}$RCD (MIN) with the requirement that AL ≤ $^{t}$RCD (MIN). A typical application using this feature would set AL = $^{t}$RCD (MIN) - 1 × $^{t}$CK. The READ or WRITE command is held for the time of the AL before it is issued internally to the DDR2 SDRAM device. RL is controlled by the sum of AL and CL; RL = AL + CL. WRITE latency (WL) is equal to RL minus one clock; WL = AL + CL - 1 × $^{t}$CK. An example of RL is shown in Figure 39 (page 89). An example of a WL is shown in Figure 40 (page 89).


Micron Technology, Inc. reserves the right to change products or specifications without notice.
© 2007 Micron Technology, Inc. All rights reserved.

**Figure 39: READ Latency**

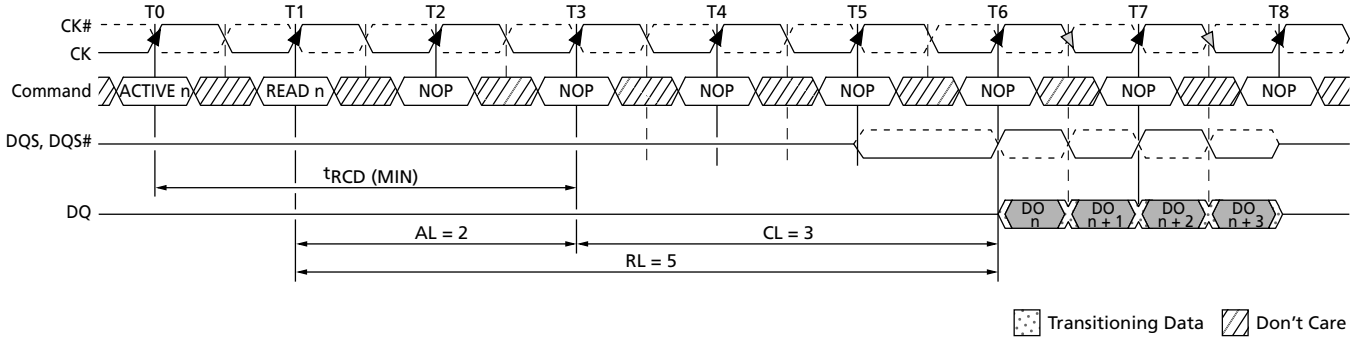


Notes: 1. BL = 4.
2. Shown with nominal $^{t}$AC, $^{t}$DQSCK, and $^{t}$DQSQ.
3. RL = AL + CL = 5.

**Figure 40: WRITE Latency**

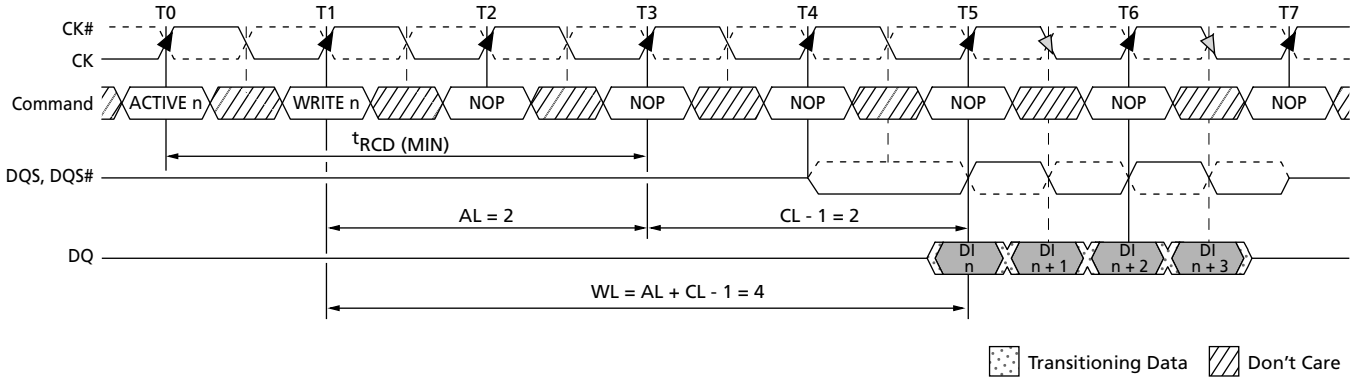


Notes: 1. BL = 4.
2. CL = 3.
3. WL = AL + CL - 1 = 4.


Micron Technology, Inc. reserves the right to change products or specifications without notice.
© 2007 Micron Technology, Inc. All rights reserved.

# Extended Mode Register 2 (EMR2)

The extended mode register 2 (EMR2) controls functions beyond those controlled by the mode register. Currently all bits in EMR2 are reserved, except for E7, which is used in commercial or high-temperature operations, as shown in Figure 41. The EMR2 is programmed via the LM command and will retain the stored information until it is programmed again or until the device loses power. Reprogramming the EMR will not alter the contents of the memory array, provided it is performed correctly.

Bit E7 (A7) must be programmed as 1 to provide a faster refresh rate on IT and AT devices if $T_C$ exceeds 85°C.

EMR2 must be loaded when all banks are idle and no bursts are in progress, and the controller must wait the specified time $^{t}$MRD before initiating any subsequent operation. Violating either of these requirements could result in an unspecified operation.

**Figure 41: EMR2 Definition**

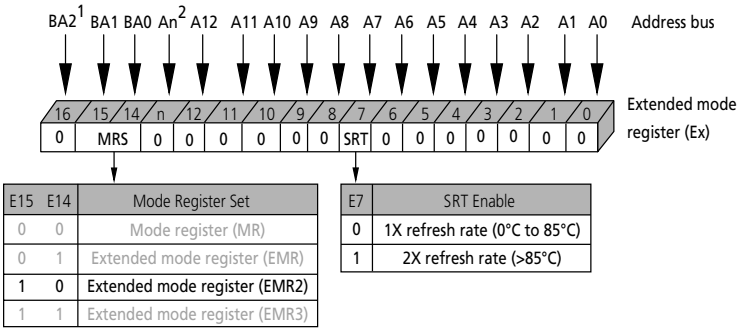


| E15 | E14 | Mode Register Set |
|---|---|---|
| 0 | 0 | Mode register (MR) |
| 0 | 1 | Extended mode register (EMR) |
| 1 | 0 | Extended mode register (EMR2) |
| 1 | 1 | Extended mode register (EMR3) |

| E7 | SRT Enable |
|---|---|
| 0 | 1X refresh rate (0°C to 85°C) |
| 1 | 2X refresh rate (>85°C) |

Notes:
1. E16 (BA2) is only applicable for densities ≥1Gb, reserved for future use, and must be programmed to 0.
2. Mode bits (E*n*) with corresponding address balls (A*n*) greater than E12 (A12) are reserved for future use and must be programmed to 0.


Micron Technology, Inc. reserves the right to change products or specifications without notice.
© 2007 Micron Technology, Inc. All rights reserved.

# Extended Mode Register 3 (EMR3)

The extended mode register 3 (EMR3) controls functions beyond those controlled by the mode register. Currently all bits in EMR3 are reserved, as shown in Figure 42. The EMR3 is programmed via the LM command and will retain the stored information until it is programmed again or until the device loses power. Reprogramming the EMR will not alter the contents of the memory array, provided it is performed correctly.

EMR3 must be loaded when all banks are idle and no bursts are in progress, and the controller must wait the specified time $^{t}$MRD before initiating any subsequent operation. Violating either of these requirements could result in an unspecified operation.

**Figure 42: EMR3 Definition**

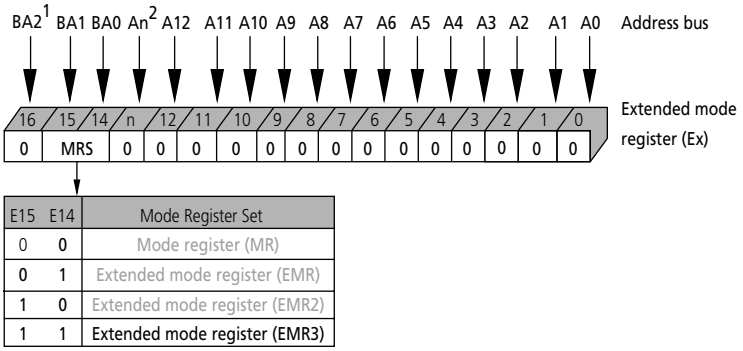


| E15 | E14 | Mode Register Set |
|---|---|---|
| 0 | 0 | Mode register (MR) |
| 0 | 1 | Extended mode register (EMR) |
| 1 | 0 | Extended mode register (EMR2) |
| 1 | 1 | Extended mode register (EMR3) |

Notes:
1. E16 (BA2) is only applicable for densities ≥1Gb, is reserved for future use, and must be programmed to 0.
2. Mode bits (E*n*) with corresponding address balls (A*n*) greater than E12 (A12) are reserved for future use and must be programmed to 0.


Micron Technology, Inc. reserves the right to change products or specifications without notice.
© 2007 Micron Technology, Inc. All rights reserved.

# Initialization

## Figure 43: DDR2 Power-Up and Initialization

DDR2 SDRAM must be powered up and initialized in a predefined manner. Operational procedures other than those specified may result in undefined operation. Figure 43 illustrates, and the notes outline, the sequence required for power-up and initialization.

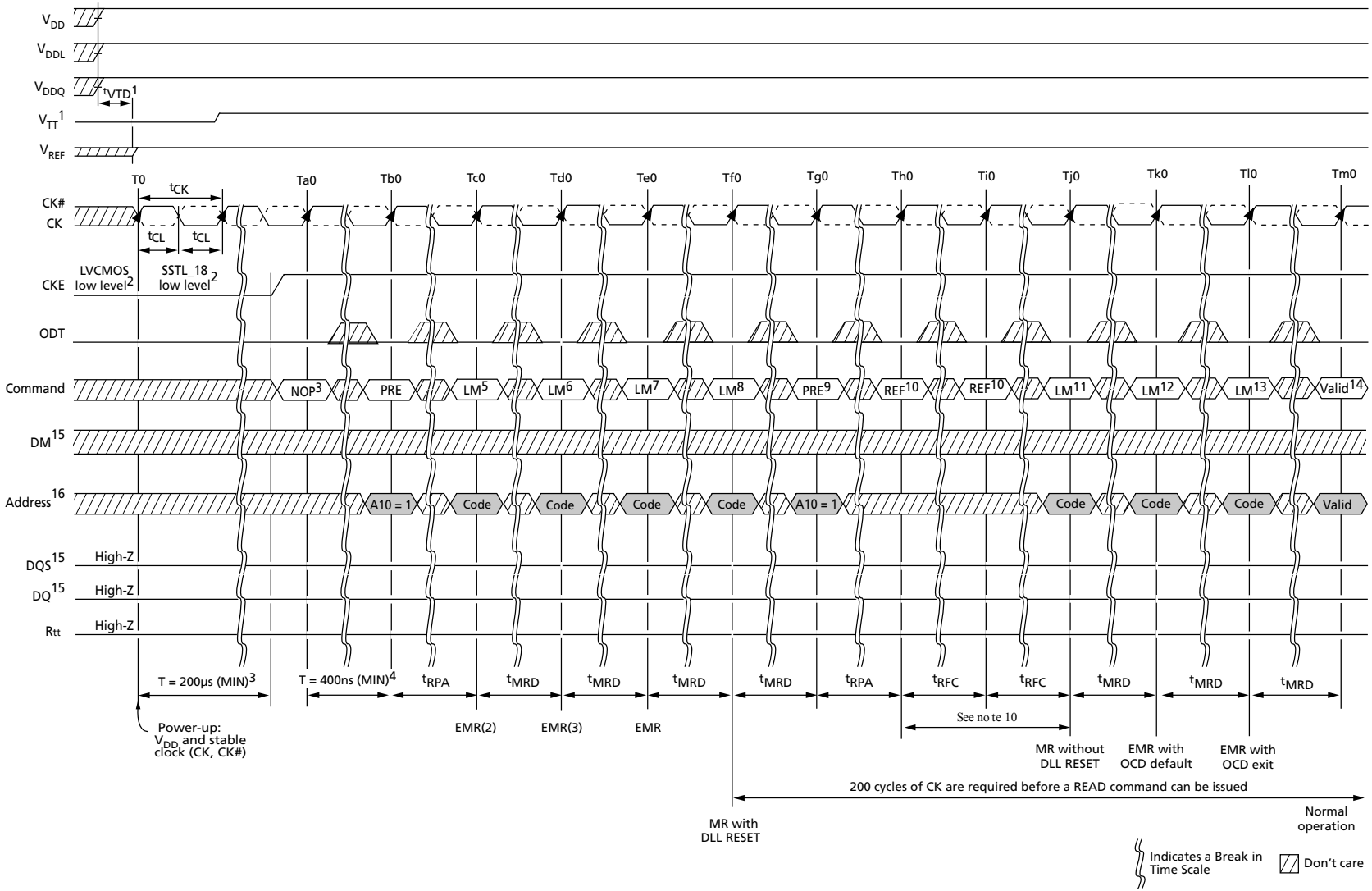




CCMTD-1725822587-9658
1GbDDR2.pdf – Rev. AB 09/18 EN
Micron Technology, Inc. reserves the right to change products or specifications without notice.
© 2007 Micron Technology, Inc. All rights reserved.

Notes:

1. Applying power; if CKE is maintained below 0.2 × $V_{DDQ}$, outputs remain disabled. To guarantee $R_{TT}$ (ODT resistance) is off, $V_{REF}$ must be valid and a low level must be applied to the ODT ball (all other inputs may be undefined; I/Os and outputs must be less than $V_{DDQ}$ during voltage ramp time to avoid DDR2 SDRAM device latch-up). $V_{TT}$ is not applied directly to the device; however, $^{t}$VTD should be ≥0 to avoid device latch-up. At least one of the following two sets of conditions (A or B) must be met to obtain a stable supply state (stable supply defined as $V_{DD}$, $V_{DDL}$, $V_{DDQ}$, $V_{REF}$, and $V_{TT}$ are between their minimum and maximum values as stated in Table 13 (page 46)):

   A. Single power source: The $V_{DD}$ voltage ramp from 300mV to $V_{DD,min}$ must take no longer than 200ms; during the $V_{DD}$ voltage ramp, $|V_{DD} - V_{DDQ}| \leq 0.3V$. Once supply voltage ramping is complete (when $V_{DDQ}$ crosses $V_{DD,min}$), Table 13 specifications apply.

   - $V_{DD}$, $V_{DDL}$, and $V_{DDQ}$ are driven from a single power converter output
   - $V_{TT}$ is limited to 0.95V MAX
   - $V_{REF}$ tracks $V_{DDQ}/2$; $V_{REF}$ must be within ±0.3V with respect to $V_{DDQ}/2$ during supply ramp time; does not need to be satisfied when ramping power down
   - $V_{DDQ} \geq V_{REF}$ at all times

   B. Multiple power sources: $V_{DD} \geq V_{DDL} \geq V_{DDQ}$ must be maintained during supply voltage ramping, for both AC and DC levels, until supply voltage ramping completes ($V_{DDQ}$ crosses $V_{DD,min}$). Once supply voltage ramping is complete, Table 13 specifications apply.

   - Apply $V_{DD}$ and $V_{DDL}$ before or at the same time as $V_{DDQ}$; $V_{DD}/V_{DDL}$ voltage ramp time must be ≤ 200ms from when $V_{DD}$ ramps from 300mV to $V_{DD,min}$
   - Apply $V_{DDQ}$ before or at the same time as $V_{TT}$; the $V_{DDQ}$ voltage ramp time from when $V_{DD,min}$ is achieved to when $V_{DDQ,min}$ is achieved must be ≤ 500ms; while $V_{DD}$ is ramping, current can be supplied from $V_{DD}$ through the device to $V_{DDQ}$
   - $V_{REF}$ must track $V_{DDQ}/2$; $V_{REF}$ must be within ±0.3V with respect to $V_{DDQ}/2$ during supply ramp time; $V_{DDQ} \geq V_{REF}$ must be met at all times; does not need to be satisfied when ramping power down
   - Apply $V_{TT}$; the $V_{TT}$ voltage ramp time from when $V_{DDQ,min}$ is achieved to when $V_{TT,min}$ is achieved must be no greater than 500ms
2. CKE requires LVCMOS input levels prior to state T0 to ensure DQs are High-Z during device power-up prior to $V_{REF}$ being stable. After state T0, CKE is required to have SSTL_18 input levels. Once CKE transitions to a high level, it must stay HIGH for the duration of the initialization sequence.
3. For a minimum of 200µs after stable power and clock (CK, CK#), apply NOP or DESELECT commands, then take CKE HIGH.
4. Wait a minimum of 400ns then issue a PRECHARGE ALL command.
5. Issue a LOAD MODE command to the EMR(2). To issue an EMR(2) command, provide LOW to BA0, and provide HIGH to BA1; set register E7 to "0" or "1" to select appropriate self refresh rate; remaining EMR(2) bits must be "0" (see Extended Mode Register 2 (EMR2) (page 90) for all EMR(2) requirements).
6. Issue a LOAD MODE command to the EMR(3). To issue an EMR(3) command, provide HIGH to BA0 and BA1; remaining EMR(3) bits must be "0." Extended Mode Register 3 (EMR3) for all EMR(3) requirements.
7. Issue a LOAD MODE command to the EMR to enable DLL. To issue a DLL ENABLE command, provide LOW to BA1 and A0; provide HIGH to BA0; bits E7, E8, and E9 can be set to "0" or "1;" Micron recommends setting them to "0;" remaining EMR bits must be "0." Extended Mode Register (EMR) (page 86) for all EMR requirements.
8. Issue a LOAD MODE command to the MR for DLL RESET. 200 cycles of clock input is required to lock the DLL. To issue a DLL RESET, provide HIGH to A8 and provide LOW to BA1 and BA0; CKE must be HIGH the entire time the DLL is resetting; remaining MR bits must be "0." Mode Register (MR) (page 81) for all MR requirements.


Micron Technology, Inc. reserves the right to change products or specifications without notice.
© 2007 Micron Technology, Inc. All rights reserved.

9. Issue PRECHARGE ALL command.
10. Issue two or more REFRESH commands.
11. Issue a LOAD MODE command to the MR with LOW to A8 to initialize device operation (that is, to program operating parameters without resetting the DLL). To access the MR, set BA0 and BA1 LOW; remaining MR bits must be set to desired settings. Mode Register (MR) (page 81) for all MR requirements.
12. Issue a LOAD MODE command to the EMR to enable OCD default by setting bits E7, E8, and E9 to "1," and then setting all other desired parameters. To access the EMR, set BA0 HIGH and BA1 LOW (see Extended Mode Register (EMR) (page 86) for all EMR requirements.
13. Issue a LOAD MODE command to the EMR to enable OCD exit by setting bits E7, E8, and E9 to "0," and then setting all other desired parameters. To access the extended mode registers, EMR, set BA0 HIGH and BA1 LOW for all EMR requirements.
14. The DDR2 SDRAM is now initialized and ready for normal operation 200 clock cycles after the DLL RESET at Tf0.
15. DM represents DM for the x4, x8 configurations and UDM, LDM for the x16 configuration; DQS represents DQS, DQS#, UDQS, UDQS#, LDQS, LDQS#, RDQS, RDQS# for the appropriate configuration (x4, x8, x16); DQ represents DQ[3:0] for x4, DQ[7:0] for x8 and DQ[15:0] for x16.
16. A10 = PRECHARGE ALL, CODE = desired values for mode registers (bank addresses are required to be decoded).


Micron Technology, Inc. reserves the right to change products or specifications without notice.
© 2007 Micron Technology, Inc. All rights reserved.

# ACTIVATE

Before any READ or WRITE commands can be issued to a bank within the DDR2 SDRAM, a row in that bank must be opened (activated), even when additive latency is used. This is accomplished via the ACTIVATE command, which selects both the bank and the row to be activated.

After a row is opened with an ACTIVATE command, a READ or WRITE command may be issued to that row subject to the $^{t}$RCD specification. $^{t}$RCD (MIN) should be divided by the clock period and rounded up to the next whole number to determine the earliest clock edge after the ACTIVATE command on which a READ or WRITE command can be entered. The same procedure is used to convert other specification limits from time units to clock cycles. For example, a $^{t}$RCD (MIN) specification of 20ns with a 266 MHz clock ($^{t}$CK = 3.75ns) results in 5.3 clocks, rounded up to 6. This is shown in Figure 44, which covers any case where $5 < {}^{t}\text{RCD (MIN)}/{}^{t}\text{CK} \leq 6$. Figure 44 also shows the case for $^{t}$RRD where $2 < {}^{t}\text{RRD (MIN)}/{}^{t}\text{CK} \leq 3$.

**Figure 44: Example: Meeting $^{t}$RRD (MIN) and $^{t}$RCD (MIN)**

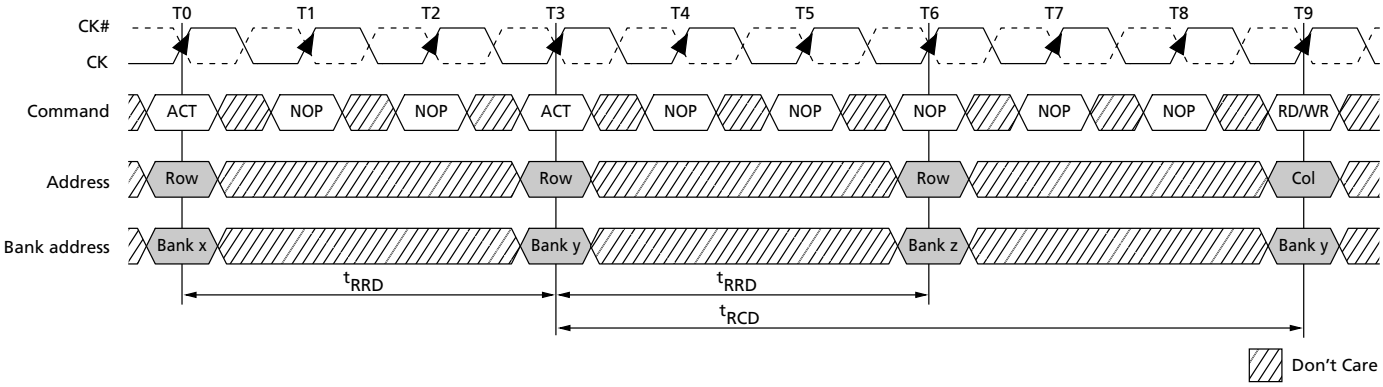


A subsequent ACTIVATE command to a different row in the same bank can only be issued after the previous active row has been closed (precharged). The minimum time interval between successive ACTIVATE commands to the same bank is defined by $^{t}$RC.

A subsequent ACTIVATE command to another bank can be issued while the first bank is being accessed, which results in a reduction of total row-access overhead. The minimum time interval between successive ACTIVATE commands to different banks is defined by $^{t}$RRD.

DDR2 devices with 8 banks (1Gb or larger) have an additional requirement: $^{t}$FAW. This requires no more than four ACTIVATE commands may be issued in any given $^{t}$FAW (MIN) period, as shown in Figure 45 (page 96).


Micron Technology, Inc. reserves the right to change products or specifications without notice.
© 2007 Micron Technology, Inc. All rights reserved.

**Figure 45: Multibank Activate Restriction**

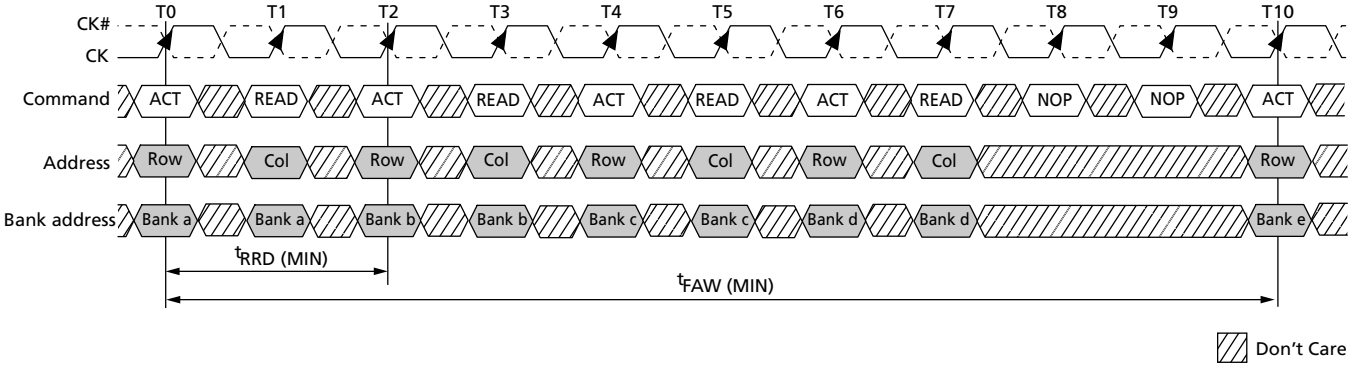


Note: 1. DDR2-533 (-37E, x4 or x8), $^{t}$CK = 3.75ns, BL = 4, AL = 3, CL = 4, $^{t}$RRD (MIN) = 7.5ns, $^{t}$FAW (MIN) = 37.5ns.


Micron Technology, Inc. reserves the right to change products or specifications without notice.
© 2007 Micron Technology, Inc. All rights reserved.

# READ

READ bursts are initiated with a READ command. The starting column and bank addresses are provided with the READ command, and auto precharge is either enabled or disabled for that burst access. If auto precharge is enabled, the row being accessed is automatically precharged at the completion of the burst. If auto precharge is disabled, the row will be left open after the completion of the burst.

During READ bursts, the valid data-out element from the starting column address will be available READ latency (RL) clocks later. RL is defined as the sum of AL and CL: RL = AL + CL. The value for AL and CL are programmable via the MR and EMR commands, respectively. Each subsequent data-out element will be valid nominally at the next positive or negative clock edge (at the next crossing of CK and CK#). Figure 46 (page 98) shows examples of RL based on different AL and CL settings.

DQS/DQS# is driven by the DDR2 SDRAM along with output data. The initial LOW state on DQS and the HIGH state on DQS# are known as the read preamble ($^{t}$RPRE). The LOW state on DQS and the HIGH state on DQS# coincident with the last data-out element are known as the read postamble ($^{t}$RPST).

Upon completion of a burst, assuming no other commands have been initiated, the DQ will go High-Z. A detailed explanation of $^{t}$DQSQ (valid data-out skew), $^{t}$QH (data-out window hold), and the valid data window are depicted in Figure 55 (page 106) and Figure 56 (page 107). A detailed explanation of $^{t}$DQSCK (DQS transition skew to CK) and $^{t}$AC (data-out transition skew to CK) is shown in Figure 57 (page 108).

Data from any READ burst may be concatenated with data from a subsequent READ command to provide a continuous flow of data. The first data element from the new burst follows the last element of a completed burst. The new READ command should be issued *x* cycles after the first READ command, where *x* equals BL/2 cycles (see Figure 47 (page 99)).

Nonconsecutive read data is illustrated in Figure 48 (page 100). Full-speed random read accesses within a page (or pages) can be performed. DDR2 SDRAM supports the use of concurrent auto precharge timing (see Table 42 (page 103)).

DDR2 SDRAM does not allow interrupting or truncating of any READ burst using BL = 4 operations. Once the BL = 4 READ command is registered, it must be allowed to complete the entire READ burst. However, a READ (with auto precharge disabled) using BL = 8 operation may be interrupted and truncated *only* by another READ burst as long as the interruption occurs on a 4-bit boundary due to the 4*n* prefetch architecture of DDR2 SDRAM. As shown in Figure 49 (page 101), READ burst BL = 8 operations may not be interrupted or truncated with any other command except another READ command.

Data from any READ burst must be completed before a subsequent WRITE burst is allowed. An example of a READ burst followed by a WRITE burst is shown in Figure 50 (page 101). The $^{t}$DQSS (NOM) case is shown ($^{t}$DQSS [MIN] and $^{t}$DQSS [MAX] are defined in Figure 58 (page 110)).


Micron Technology, Inc. reserves the right to change products or specifications without notice.
© 2007 Micron Technology, Inc. All rights reserved.

**Figure 46: READ Latency**

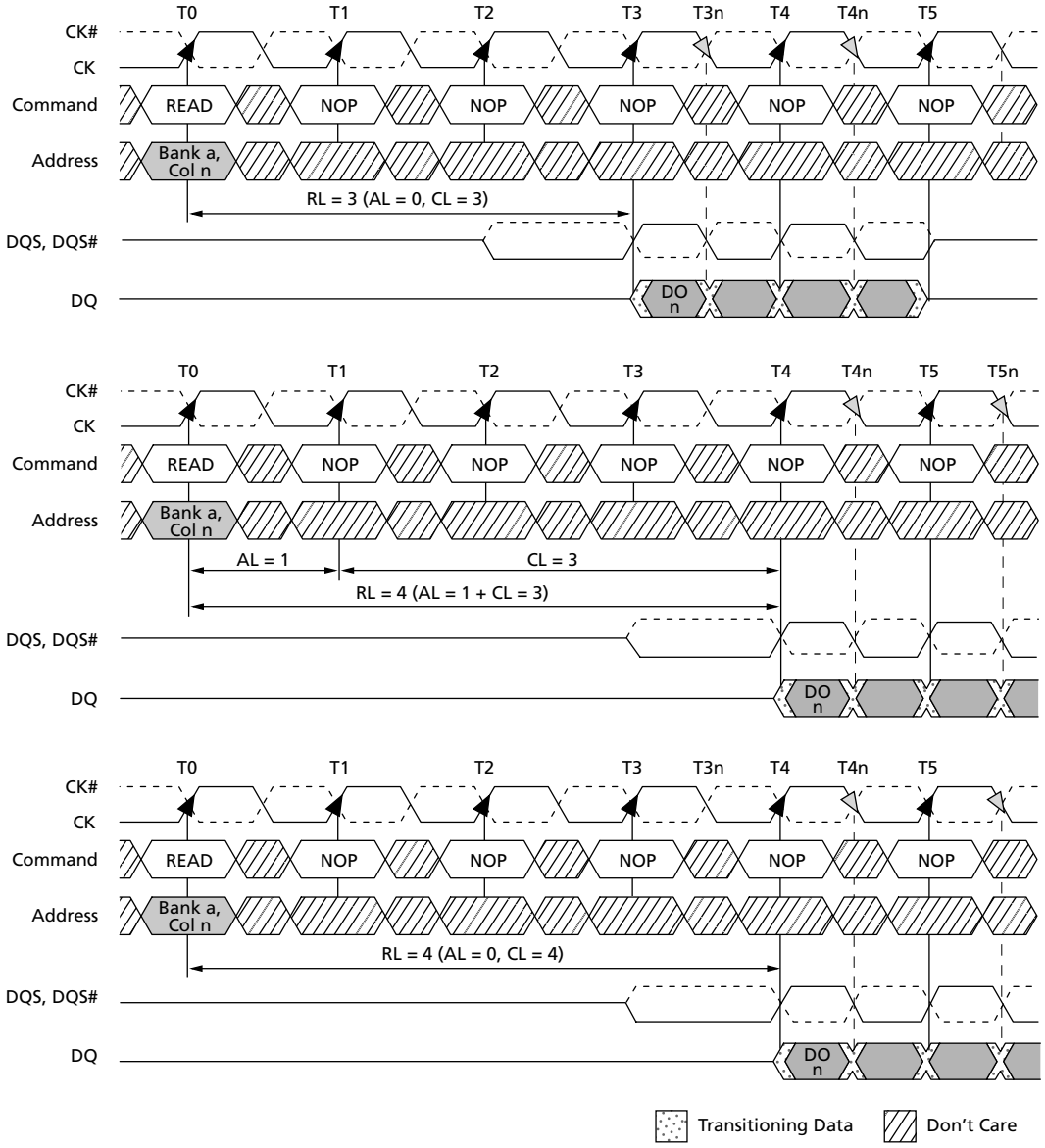


Notes:
1. DO *n* = data-out from column *n*.
2. BL = 4.
3. Three subsequent elements of data-out appear in the programmed order following DO *n*.
4. Shown with nominal $^{t}$AC, $^{t}$DQSCK, and $^{t}$DQSQ.


Micron Technology, Inc. reserves the right to change products or specifications without notice.
© 2007 Micron Technology, Inc. All rights reserved.

**Figure 47: Consecutive READ Bursts**

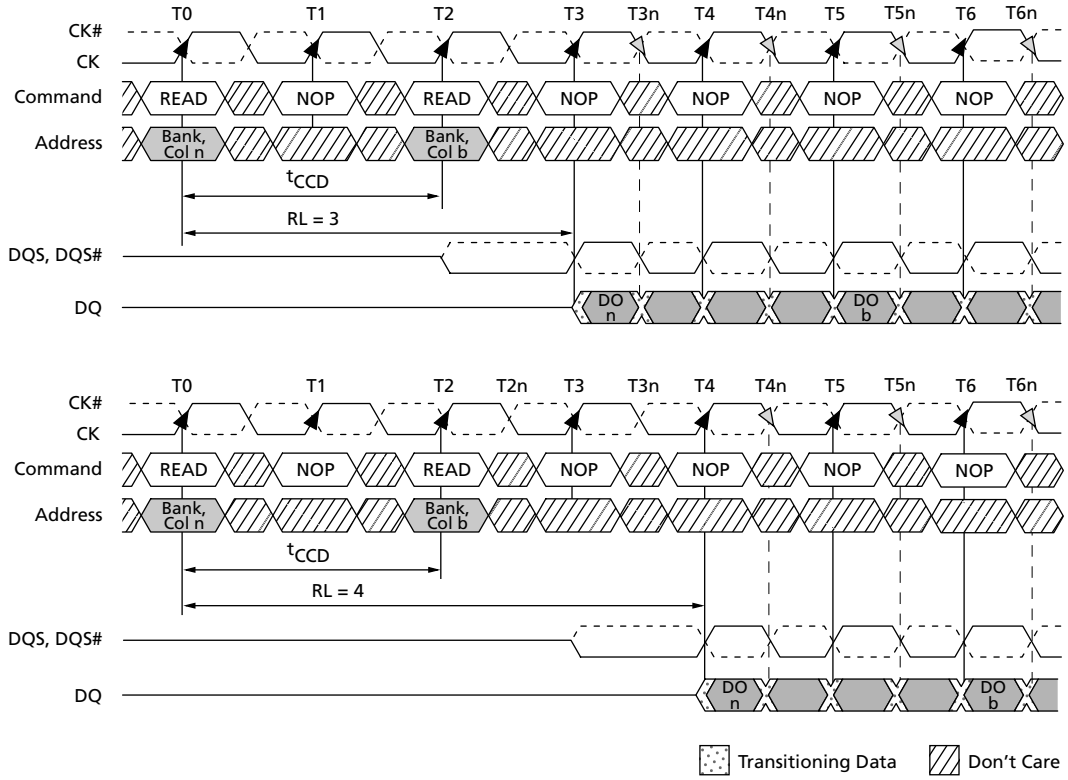


Notes:
1. DO *n* (or *b*) = data-out from column *n* (or column *b*).
2. BL = 4.
3. Three subsequent elements of data-out appear in the programmed order following DO *n*.
4. Three subsequent elements of data-out appear in the programmed order following DO *b*.
5. Shown with nominal $^{t}$AC, $^{t}$DQSCK, and $^{t}$DQSQ.
6. Example applies only when READ commands are issued to same device.


Micron Technology, Inc. reserves the right to change products or specifications without notice.
© 2007 Micron Technology, Inc. All rights reserved.

**Figure 48: Nonconsecutive READ Bursts**

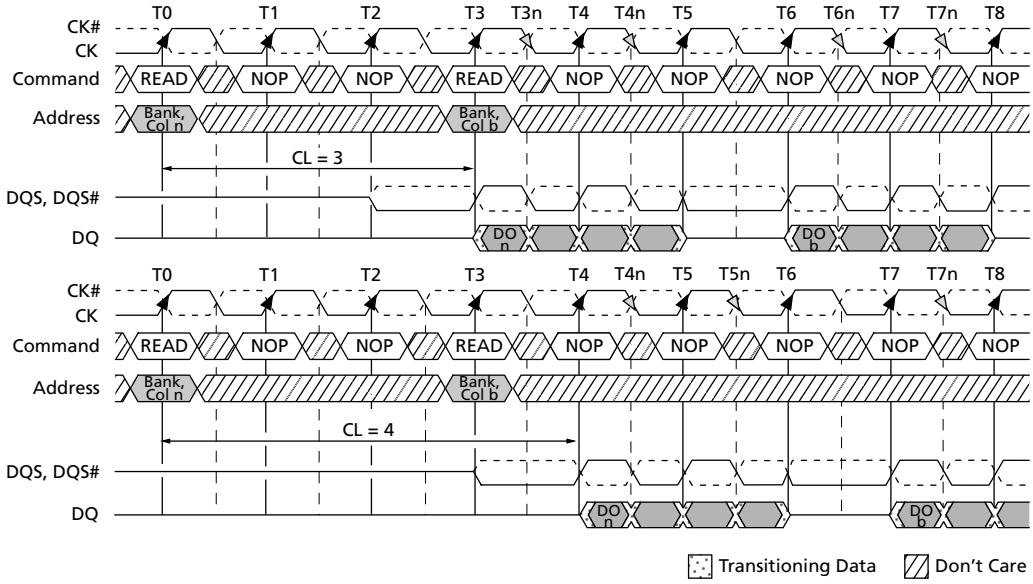


Notes:
1. DO *n* (or *b*) = data-out from column *n* (or column *b*).
2. BL = 4.
3. Three subsequent elements of data-out appear in the programmed order following DO *n*.
4. Three subsequent elements of data-out appear in the programmed order following DO *b*.
5. Shown with nominal $^{t}$AC, $^{t}$DQSCK, and $^{t}$DQSQ.
6. Example applies when READ commands are issued to different devices or nonconsecutive READs.


Micron Technology, Inc. reserves the right to change products or specifications without notice.
© 2007 Micron Technology, Inc. All rights reserved.

**Figure 49: READ Interrupted by READ**

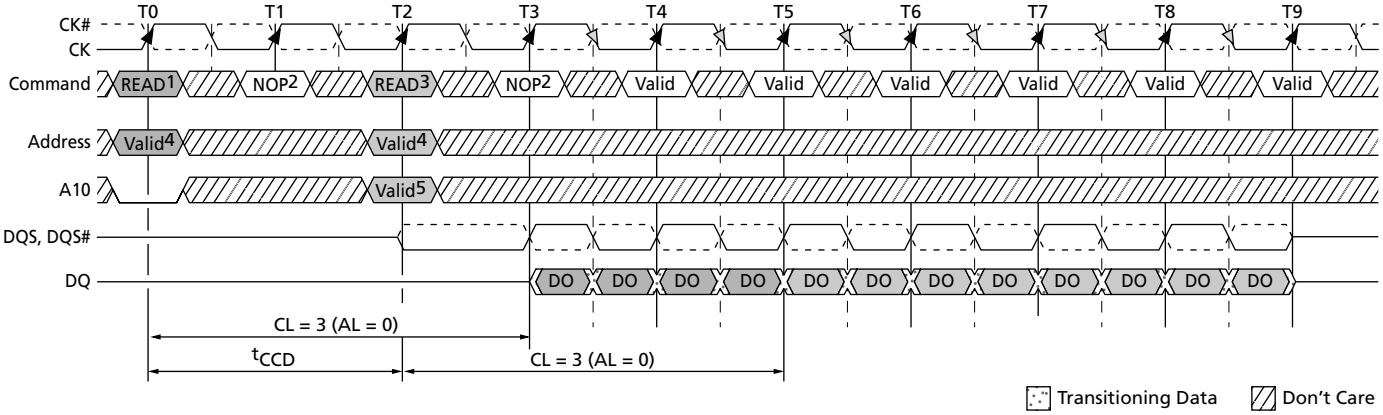


Notes:
1. BL = 8 required; auto precharge must be disabled (A10 = LOW).
2. NOP or COMMAND INHIBIT commands are valid. PRECHARGE command cannot be issued to banks used for READs at T0 and T2.
3. Interrupting READ command must be issued exactly 2 × $^{t}$CK from previous READ.
4. READ command can be issued to any valid bank and row address (READ command at T0 and T2 can be either same bank or different bank).
5. Auto precharge can be either enabled (A10 = HIGH) or disabled (A10 = LOW) by the interrupting READ command.
6. Example shown uses AL = 0; CL = 3, BL = 8, shown with nominal $^{t}$AC, $^{t}$DQSCK, and $^{t}$DQSQ.

**Figure 50: READ-to-WRITE**

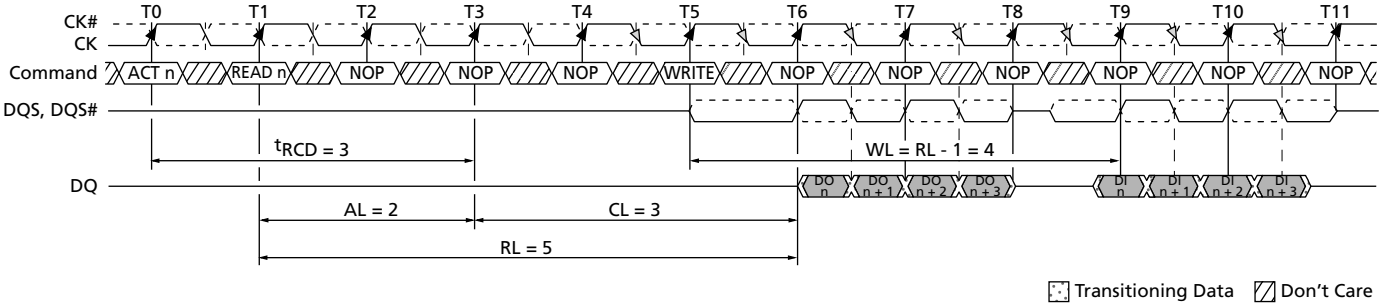


Notes:
1. BL = 4; CL = 3; AL = 2.
2. Shown with nominal $^{t}$AC, $^{t}$DQSCK, and $^{t}$DQSQ.

## READ with Precharge

A READ burst may be followed by a PRECHARGE command to the same bank, provided auto precharge is not activated. The minimum READ-to-PRECHARGE command spacing to the same bank has two requirements that must be satisfied: AL + BL/2 clocks and $^{t}$RTP. $^{t}$RTP is the minimum time from the rising clock edge that initiates the last 4-bit prefetch of a READ command to the PRECHARGE command. For BL = 4, this is the time from the actual READ (AL after the READ command) to PRECHARGE command. For BL = 8, this is the time from AL + 2 × CK after the READ-to-PRECHARGE command. Follow-


Micron Technology, Inc. reserves the right to change products or specifications without notice.
© 2007 Micron Technology, Inc. All rights reserved.

ing the PRECHARGE command, a subsequent command to the same bank cannot be issued until $^{t}$RP is met. However, part of the row precharge time is hidden during the access of the last data elements.

Examples of READ-to-PRECHARGE for BL = 4 are shown in Figure 51 and in Figure 52 for BL = 8. The delay from READ-to-PRECHARGE period to the same bank is AL + BL/2 - 2CK + MAX ($^{t}$RTP/$^{t}$CK or 2 × CK) where MAX means the larger of the two.

**Figure 51: READ-to-PRECHARGE – BL = 4**

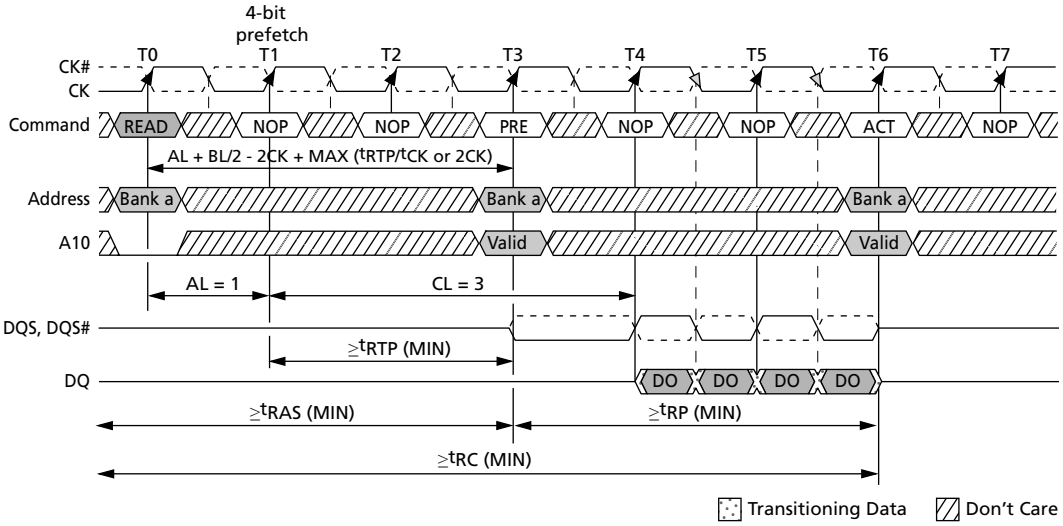


Notes:
1. RL = 4 (AL = 1, CL = 3); BL = 4.
2. $^{t}$RTP ≥ 2 clocks.
3. Shown with nominal $^{t}$AC, $^{t}$DQSCK, and $^{t}$DQSQ.

**Figure 52: READ-to-PRECHARGE – BL = 8**

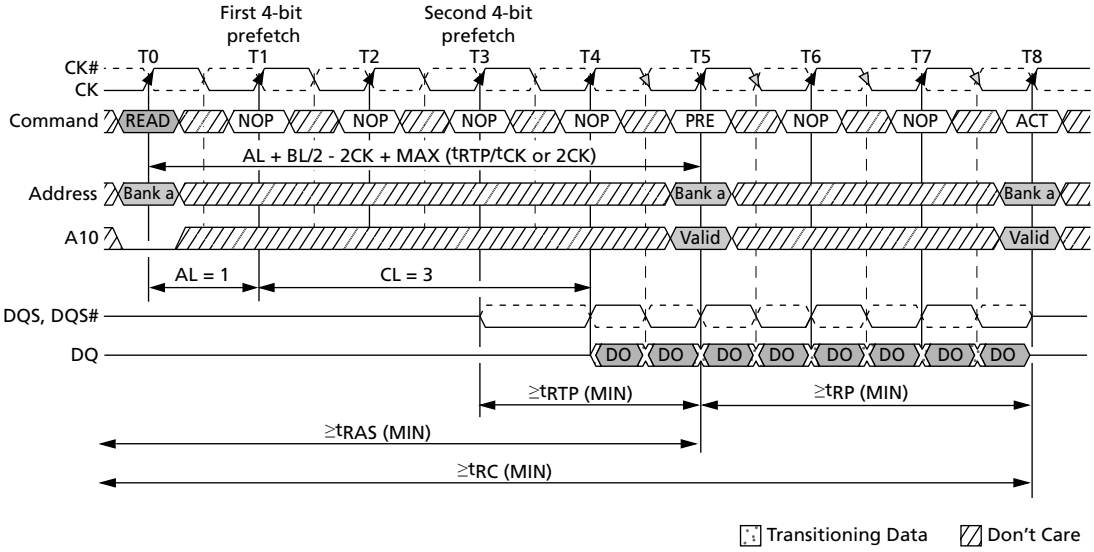


Notes:
1. RL = 4 (AL = 1, CL = 3); BL = 8.
2. $^{t}$RTP ≥ 2 clocks.


Micron Technology, Inc. reserves the right to change products or specifications without notice.
© 2007 Micron Technology, Inc. All rights reserved.

3. Shown with nominal $^{t}$AC, $^{t}$DQSCK, and $^{t}$DQSQ.

## READ with Auto Precharge

If A10 is high when a READ command is issued, the READ with auto precharge function is engaged. The DDR2 SDRAM starts an auto precharge operation on the rising clock edge that is AL + (BL/2) cycles later than the read with auto precharge command provided $^{t}$RAS (MIN) and $^{t}$RTP are satisfied. If $^{t}$RAS (MIN) is not satisfied at this rising clock edge, the start point of the auto precharge operation will be delayed until $^{t}$RAS (MIN) is satisfied. If $^{t}$RTP (MIN) is not satisfied at this rising clock edge, the start point of the auto precharge operation will be delayed until $^{t}$RTP (MIN) is satisfied. When the internal precharge is pushed out by $^{t}$RTP, $^{t}$RP starts at the point where the internal precharge happens (not at the next rising clock edge after this event).

When BL = 4, the minimum time from READ with auto precharge to the next ACTIVATE command is AL + ($^{t}$RTP + $^{t}$RP)/$^{t}$CK. When BL = 8, the minimum time from READ with auto precharge to the next ACTIVATE command is AL + 2 clocks + ($^{t}$RTP + $^{t}$RP)/$^{t}$CK. The term ($^{t}$RTP + $^{t}$RP)/$^{t}$CK is always rounded up to the next integer. A general purpose equation can also be used: AL + BL/2 - 2CK + ($^{t}$RTP + $^{t}$RP)/$^{t}$CK. In any event, the internal precharge does not start earlier than two clocks after the last 4-bit prefetch.

READ with auto precharge command may be applied to one bank while another bank is operational. This is referred to as concurrent auto precharge operation, as noted in Table 42. Examples of READ with precharge and READ with auto precharge with applicable timing requirements are shown in Figure 53 (page 104) and Figure 54 (page 105), respectively.

**Table 42: READ Using Concurrent Auto Precharge**

| From Command (Bank *n*) | To Command (Bank *m*) | Minimum Delay (with Concurrent Auto Precharge) | Units |
|---|---|---|---|
| READ with auto precharge | READ or READ with auto precharge | BL/2 | $^{t}$CK |
| | WRITE or WRITE with auto precharge | (BL/2) + 2 | $^{t}$CK |
| | PRECHARGE or ACTIVATE | 1 | $^{t}$CK |


Micron Technology, Inc. reserves the right to change products or specifications without notice.
© 2007 Micron Technology, Inc. All rights reserved.

**Figure 53: Bank Read – Without Auto Precharge**

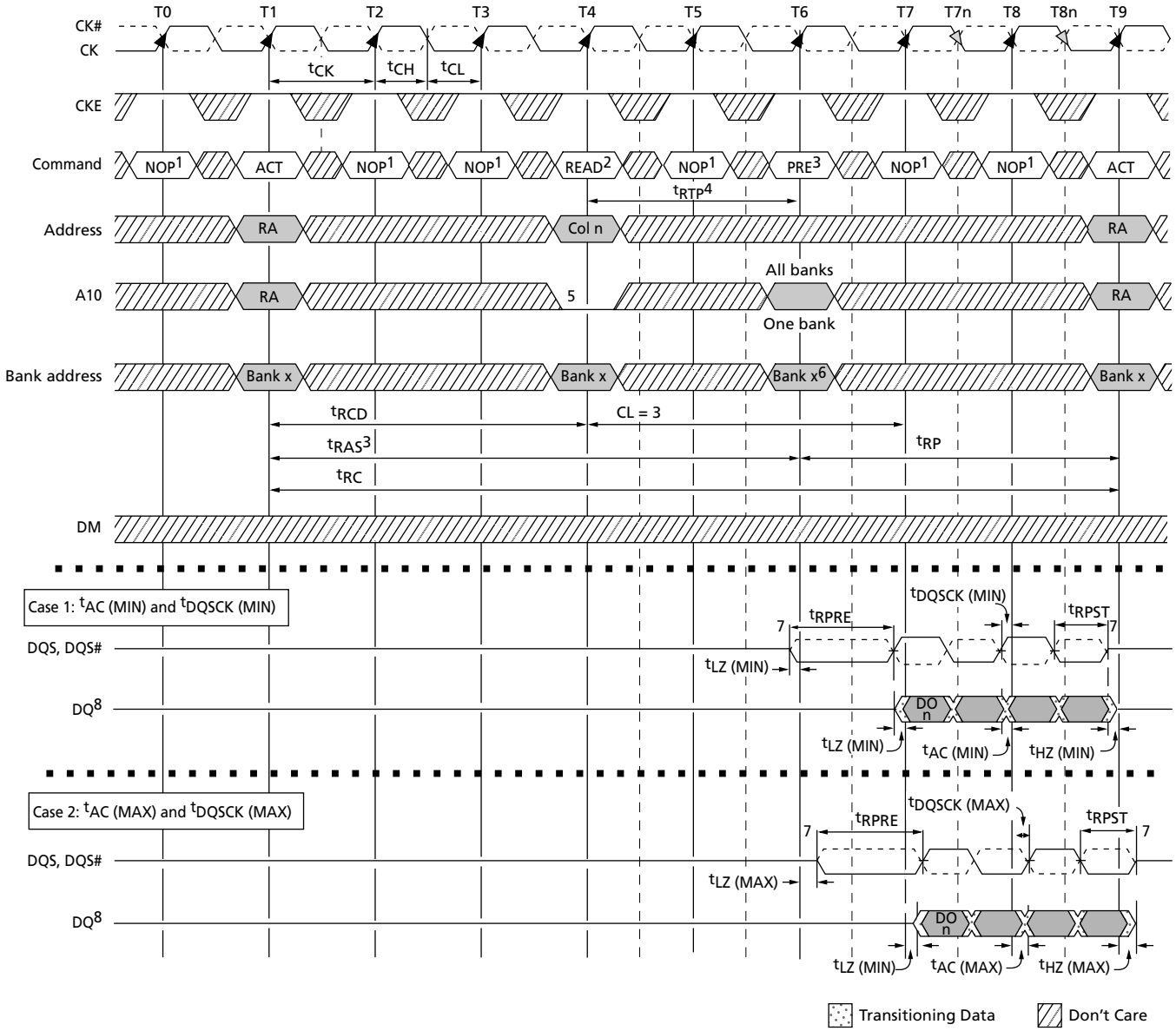


Notes:
1. NOP commands are shown for ease of illustration; other commands may be valid at these times.
2. BL = 4 and AL = 0 in the case shown.
3. The PRECHARGE command can only be applied at T6 if $^{t}$RAS (MIN) is met.
4. READ-to-PRECHARGE = AL + BL/2 - 2CK + MAX ($^{t}$RTP/$^{t}$CK or 2CK).
5. Disable auto precharge.
6. "Don't Care" if A10 is HIGH at T5.
7. I/O balls, when entering or exiting High-Z, are not referenced to a specific voltage level, but to when the device begins to drive or no longer drives, respectively.
8. DO *n* = data-out from column *n*; subsequent elements are applied in the programmed order.


Micron Technology, Inc. reserves the right to change products or specifications without notice.
© 2007 Micron Technology, Inc. All rights reserved.

**Figure 54: Bank Read – with Auto Precharge**

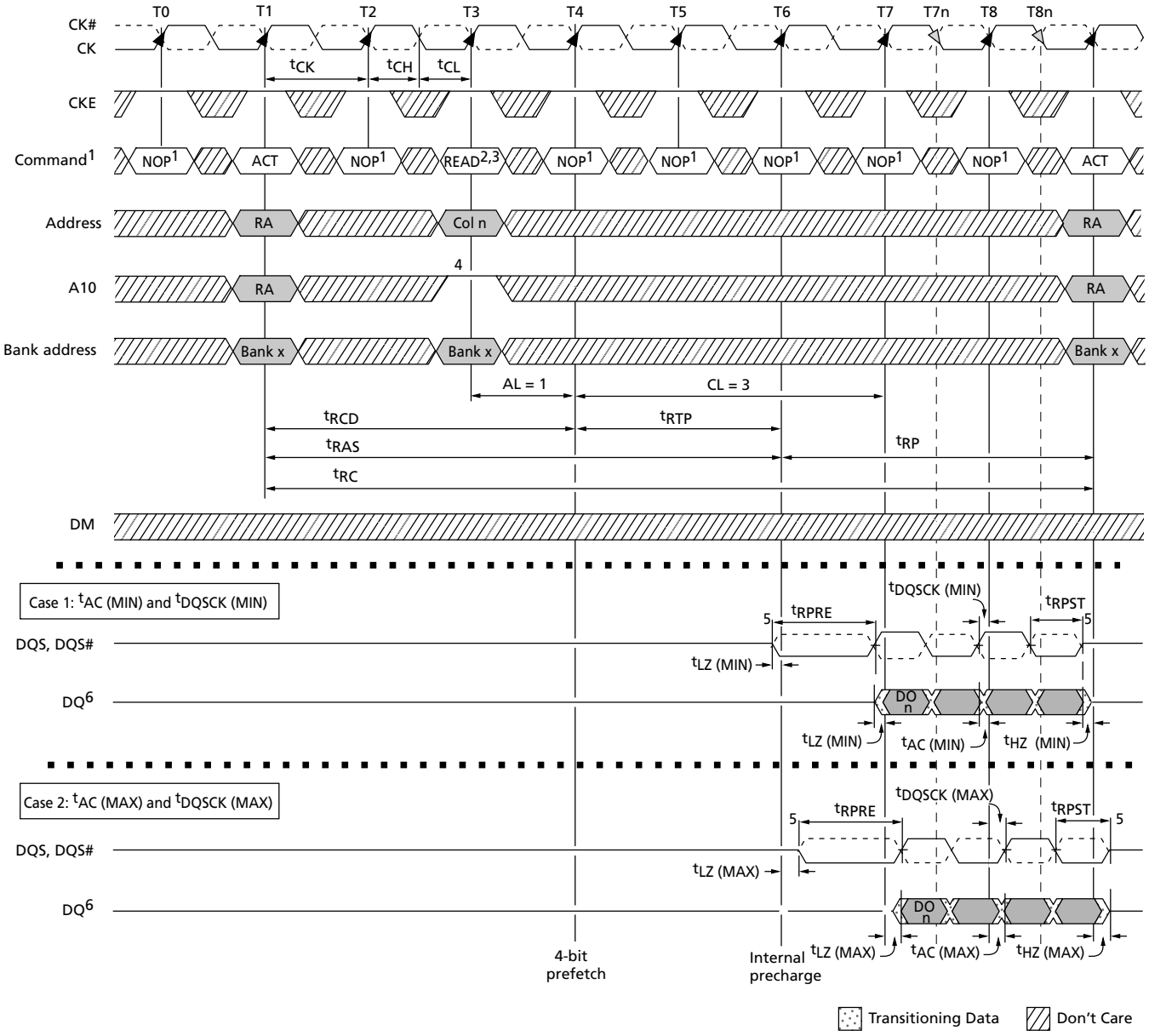


Notes:
1. NOP commands are shown for ease of illustration; other commands may be valid at these times.
2. BL = 4, RL = 4 (AL = 1, CL = 3) in the case shown.
3. The DDR2 SDRAM internally delays auto precharge until both $^{t}$RAS (MIN) and $^{t}$RTP (MIN) have been satisfied.
4. Enable auto precharge.
5. I/O balls, when entering or exiting High-Z, are not referenced to a specific voltage level, but to when the device begins to drive or no longer drives, respectively.
6. DO *n* = data-out from column *n*; subsequent elements are applied in the programmed order.


Micron Technology, Inc. reserves the right to change products or specifications without notice.
© 2007 Micron Technology, Inc. All rights reserved.

**Figure 55: x4, x8 Data Output Timing – $^{t}$DQSQ, $^{t}$QH, and Data Valid Window**

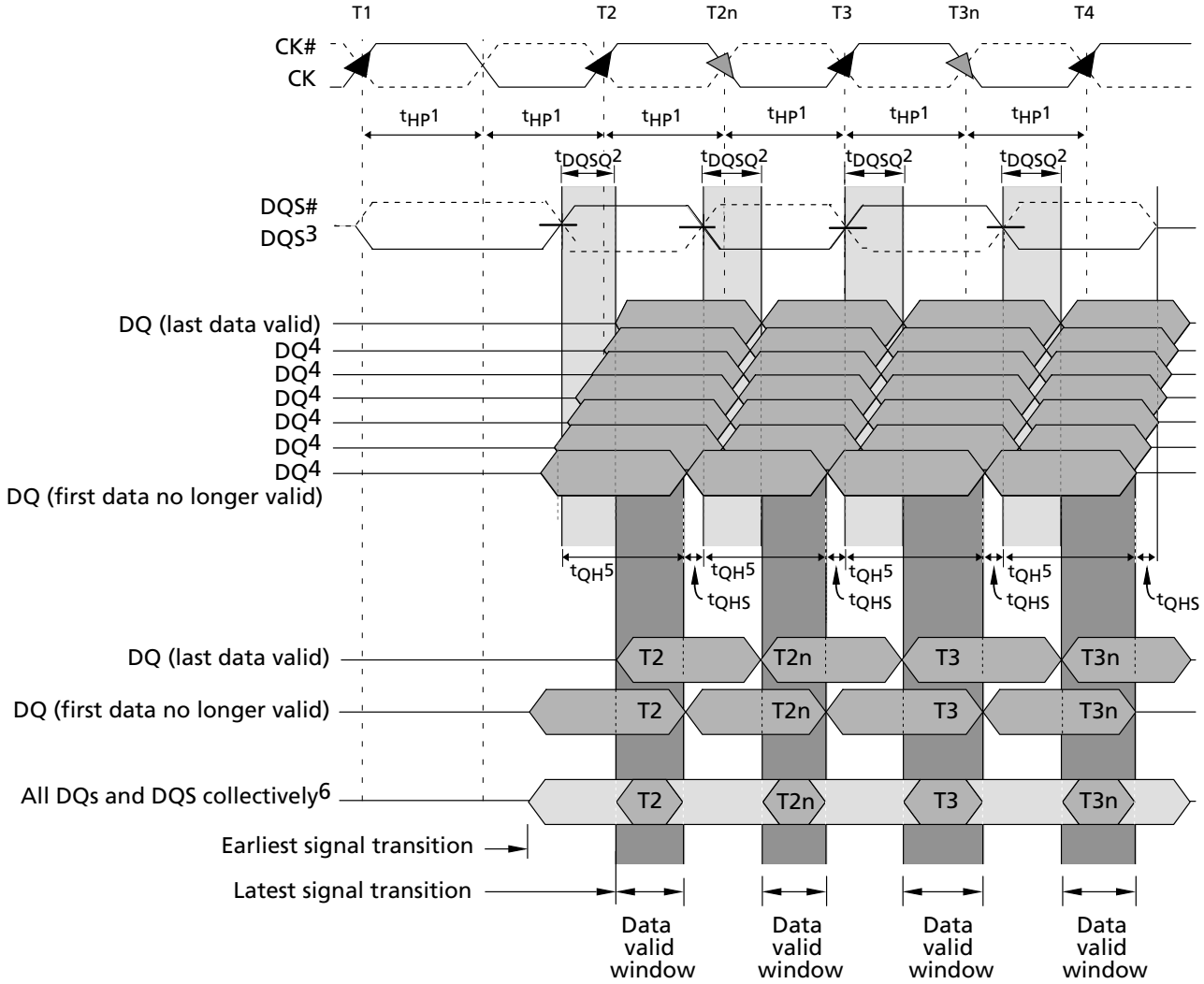


Notes:
1. $^{t}$HP is the lesser of $^{t}$CL or $^{t}$CH clock transitions collectively when a bank is active.
2. $^{t}$DQSQ is derived at each DQS clock edge, is not cumulative over time, begins with DQS transitions, and ends with the last valid transition of DQ.
3. DQ transitioning after the DQS transition defines the $^{t}$DQSQ window. DQS transitions at T2 and at T2n are "early DQS," at T3 are "nominal DQS," and at T3n are "late DQS."
4. DQ0, DQ1, DQ2, DQ3 for x4 or DQ[7:0] for x8.
5. $^{t}$QH is derived from $^{t}$HP: $^{t}$QH = $^{t}$HP - $^{t}$QHS.
6. The data valid window is derived for each DQS transition and is defined as $^{t}$QH - $^{t}$DQSQ.


Micron Technology, Inc. reserves the right to change products or specifications without notice.
© 2007 Micron Technology, Inc. All rights reserved.

**Figure 56: x16 Data Output Timing – $^{t}$DQSQ, $^{t}$QH, and Data Valid Window**

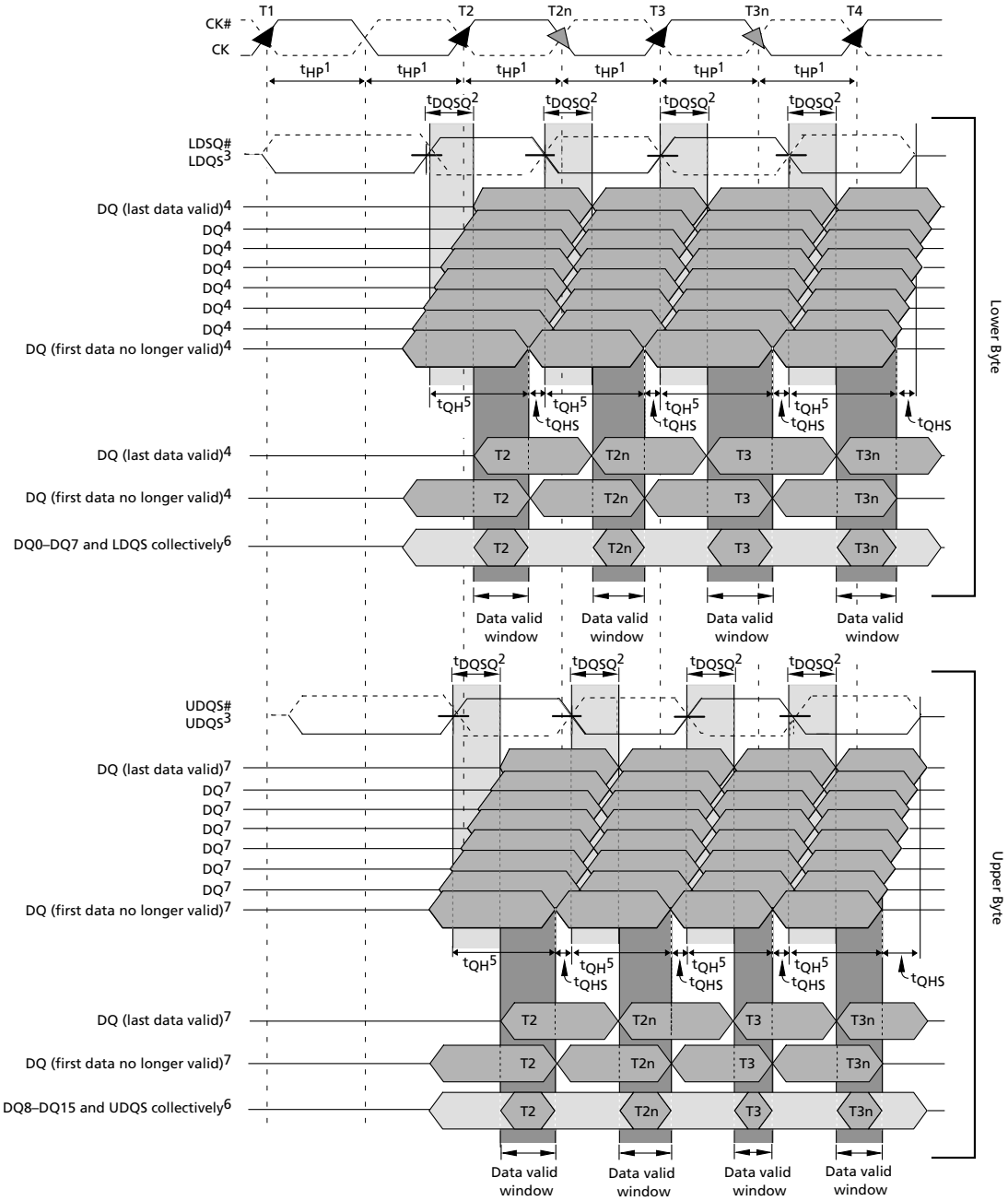


Notes:
1. $^{t}$HP is the lesser of $^{t}$CL or $^{t}$CH clock transitions collectively when a bank is active.
2. $^{t}$DQSQ is derived at each DQS clock edge, is not cumulative over time, begins with DQS transitions, and ends with the last valid transition of DQ.
3. DQ transitioning after the DQS transitions define the $^{t}$DQSQ window. LDQS defines the lower byte, and UDQS defines the upper byte.
4. DQ0, DQ1, DQ2, DQ3, DQ4, DQ5, DQ6, or DQ7.
5. $^{t}$QH is derived from $^{t}$HP: $^{t}$QH = $^{t}$HP - $^{t}$QHS.
6. The data valid window is derived for each DQS transition and is $^{t}$QH - $^{t}$DQSQ.


Micron Technology, Inc. reserves the right to change products or specifications without notice.
© 2007 Micron Technology, Inc. All rights reserved.

7. DQ8, DQ9, DQ10, D11, DQ12, DQ13, DQ14, or DQ15.

**Figure 57: Data Output Timing – $^{t}$AC and $^{t}$DQSCK**

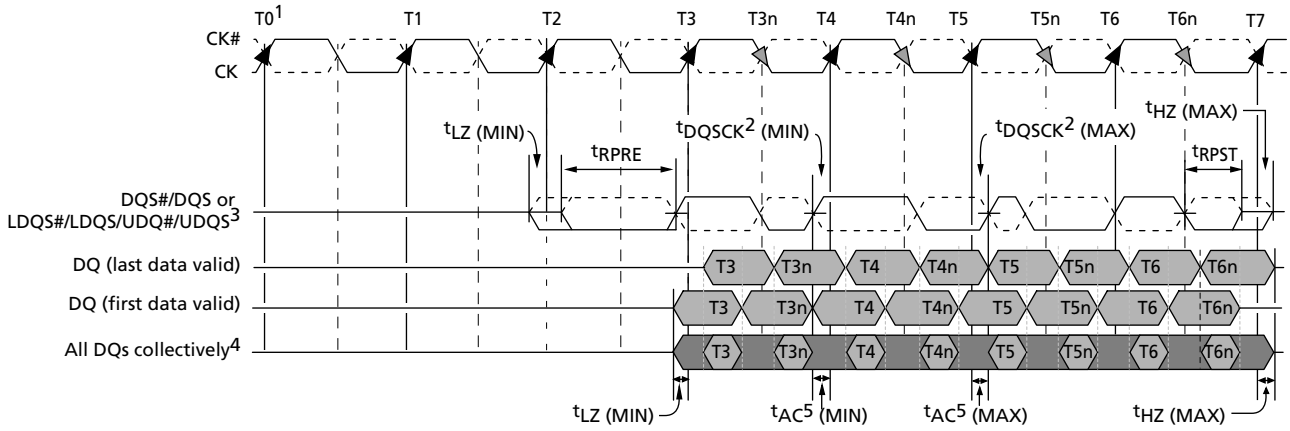


Notes:
1. READ command with CL = 3, AL = 0 issued at T0.
2. $^{t}$DQSCK is the DQS output window relative to CK and is the long-term component of DQS skew.
3. DQ transitioning after DQS transitions define $^{t}$DQSQ window.
4. All DQ must transition by $^{t}$DQSQ after DQS transitions, regardless of $^{t}$AC.
5. $^{t}$AC is the DQ output window relative to CK and is the "long term" component of DQ skew.
6. $^{t}$LZ (MIN) and $^{t}$AC (MIN) are the first valid signal transitions.
7. $^{t}$HZ (MAX) and $^{t}$AC (MAX) are the latest valid signal transitions.
8. I/O balls, when entering or exiting High-Z, are not referenced to a specific voltage level, but to when the device begins to drive or no longer drives, respectively.


Micron Technology, Inc. reserves the right to change products or specifications without notice.
© 2007 Micron Technology, Inc. All rights reserved.

# WRITE

WRITE bursts are initiated with a WRITE command. DDR2 SDRAM uses WL equal to RL minus one clock cycle (WL = RL - 1CK) (see READ (page 79)). The starting column and bank addresses are provided with the WRITE command, and auto precharge is either enabled or disabled for that access. If auto precharge is enabled, the row being accessed is precharged at the completion of the burst.

**Note:** For the WRITE commands used in the following illustrations, auto precharge is disabled.

During WRITE bursts, the first valid data-in element will be registered on the first rising edge of DQS following the WRITE command, and subsequent data elements will be registered on successive edges of DQS. The LOW state on DQS between the WRITE command and the first rising edge is known as the write preamble; the LOW state on DQS following the last data-in element is known as the write postamble.

The time between the WRITE command and the first rising DQS edge is WL ± $^{t}$DQSS. Subsequent DQS positive rising edges are timed, relative to the associated clock edge, as ±$^{t}$DQSS. $^{t}$DQSS is specified with a relatively wide range (25% of one clock cycle). All of the WRITE diagrams show the nominal case, and where the two extreme cases ($^{t}$DQSS [MIN] and $^{t}$DQSS [MAX]) might not be intuitive, they have also been included. Figure 58 (page 110) shows the nominal case and the extremes of $^{t}$DQSS for BL = 4. Upon completion of a burst, assuming no other commands have been initiated, the DQ will remain High-Z and any additional input data will be ignored.

Data for any WRITE burst may be concatenated with a subsequent WRITE command to provide continuous flow of input data. The first data element from the new burst is applied after the last element of a completed burst. The new WRITE command should be issued *x* cycles after the first WRITE command, where *x* equals BL/2.

Figure 59 (page 111) shows concatenated bursts of BL = 4 and how full-speed random write accesses within a page or pages can be performed. An example of nonconsecutive WRITEs is shown in Figure 60 (page 111). DDR2 SDRAM supports concurrent auto precharge options, as shown in Table 43.

DDR2 SDRAM does not allow interrupting or truncating any WRITE burst using BL = 4 operation. Once the BL = 4 WRITE command is registered, it must be allowed to complete the entire WRITE burst cycle. However, a WRITE BL = 8 operation (with auto precharge disabled) might be interrupted and truncated *only* by another WRITE burst as long as the interruption occurs on a 4-bit boundary due to the 4*n*-prefetch architecture of DDR2 SDRAM. WRITE burst BL = 8 operations may *not* be interrupted or truncated with any command except another WRITE command, as shown in Figure 61 (page 113).

Data for any WRITE burst may be followed by a subsequent READ command. To follow a WRITE, $^{t}$WTR should be met, as shown in Figure 62 (page 114). The number of clock cycles required to meet $^{t}$WTR is either 2 or $^{t}$WTR/$^{t}$CK, whichever is greater. Data for any WRITE burst may be followed by a subsequent PRECHARGE command. $^{t}$WR must be met, as shown in Figure 63 (page 115). $^{t}$WR starts at the end of the data burst, regardless of the data mask condition.


Micron Technology, Inc. reserves the right to change products or specifications without notice.
© 2007 Micron Technology, Inc. All rights reserved.

**Table 43: WRITE Using Concurrent Auto Precharge**

| From Command (Bank *n*) | To Command (Bank *m*) | Minimum Delay (with Concurrent Auto Precharge) | Units |
|---|---|---|---|
| WRITE with auto precharge | READ or READ with auto precharge | (CL - 1) + (BL/2) + $^{t}$WTR | $^{t}$CK |
| | WRITE or WRITE with auto precharge | (BL/2) | $^{t}$CK |
| | PRECHARGE or ACTIVATE | 1 | $^{t}$CK |

**Figure 58: Write Burst**

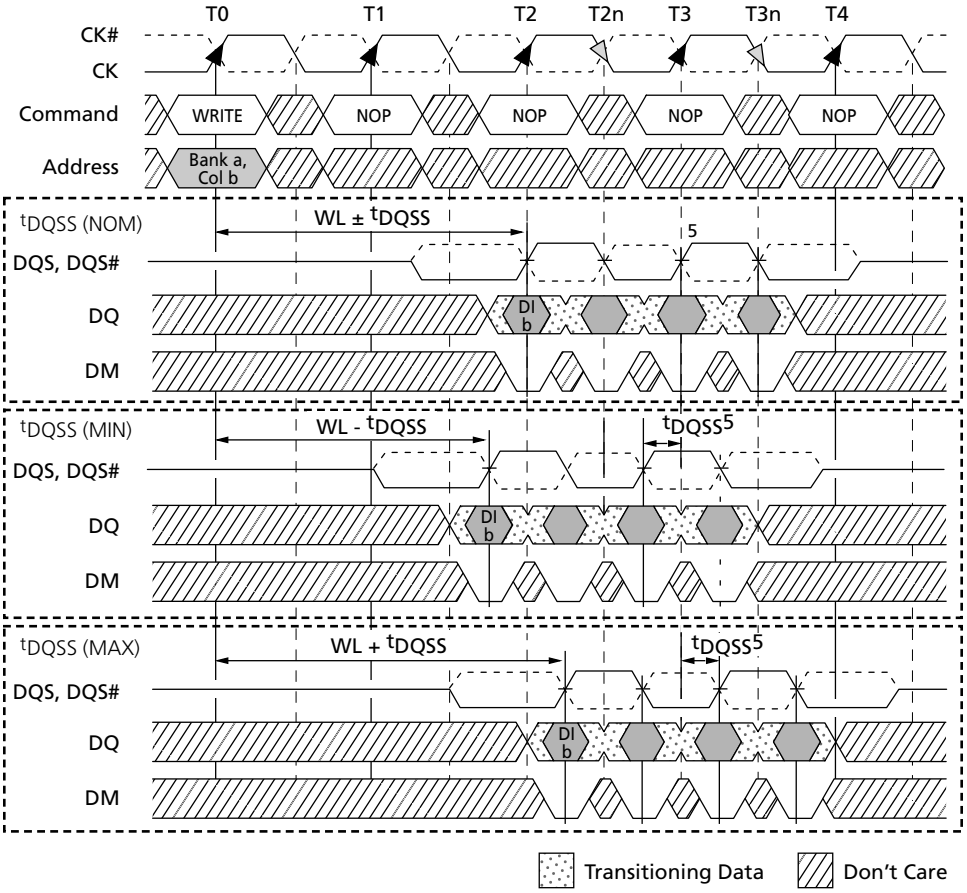


Notes:
1. Subsequent rising DQS signals must align to the clock within $^{t}$DQSS.
2. DI *b* = data-in for column *b*.
3. Three subsequent elements of data-in are applied in the programmed order following DI *b*.
4. Shown with BL = 4, AL = 0, CL = 3; thus, WL = 2.
5. A10 is LOW with the WRITE command (auto precharge is disabled).


Micron Technology, Inc. reserves the right to change products or specifications without notice.
© 2007 Micron Technology, Inc. All rights reserved.

**Figure 59: Consecutive WRITE-to-WRITE**

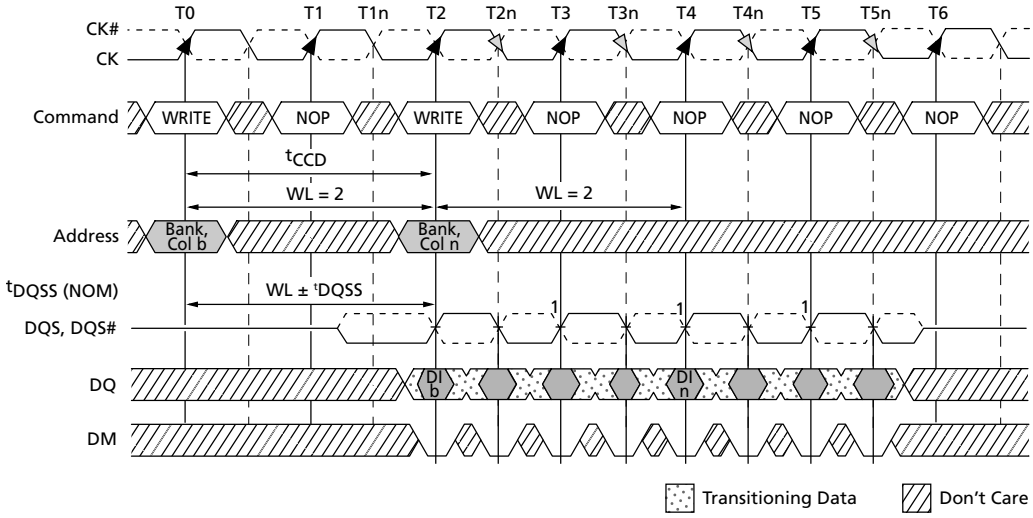


Notes:
1. Subsequent rising DQS signals must align to the clock within $^{t}$DQSS.
2. DI *b*, etc. = data-in for column *b*, etc.
3. Three subsequent elements of data-in are applied in the programmed order following DI *b*.
4. Three subsequent elements of data-in are applied in the programmed order following DI *n*.
5. Shown with BL = 4, AL = 0, CL = 3; thus, WL = 2.
6. Each WRITE command may be to any bank.

**Figure 60: Nonconsecutive WRITE-to-WRITE**

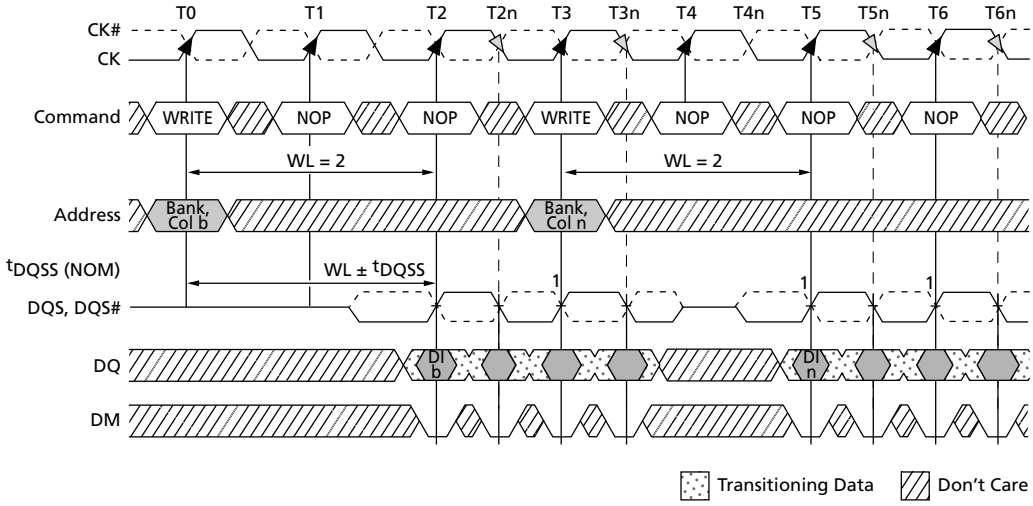


Notes:
1. Subsequent rising DQS signals must align to the clock within $^{t}$DQSS.
2. DI *b* (or *n*), etc. = data-in for column *b* (or column *n*).
3. Three subsequent elements of data-in are applied in the programmed order following DI *b*.
4. Three subsequent elements of data-in are applied in the programmed order following DI *n*.


Micron Technology, Inc. reserves the right to change products or specifications without notice.
© 2007 Micron Technology, Inc. All rights reserved.

5. Shown with BL = 4, AL = 0, CL = 3; thus, WL = 2.
6. Each WRITE command may be to any bank.


Micron Technology, Inc. reserves the right to change products or specifications without notice.
© 2007 Micron Technology, Inc. All rights reserved.

**Figure 61: WRITE Interrupted by WRITE**

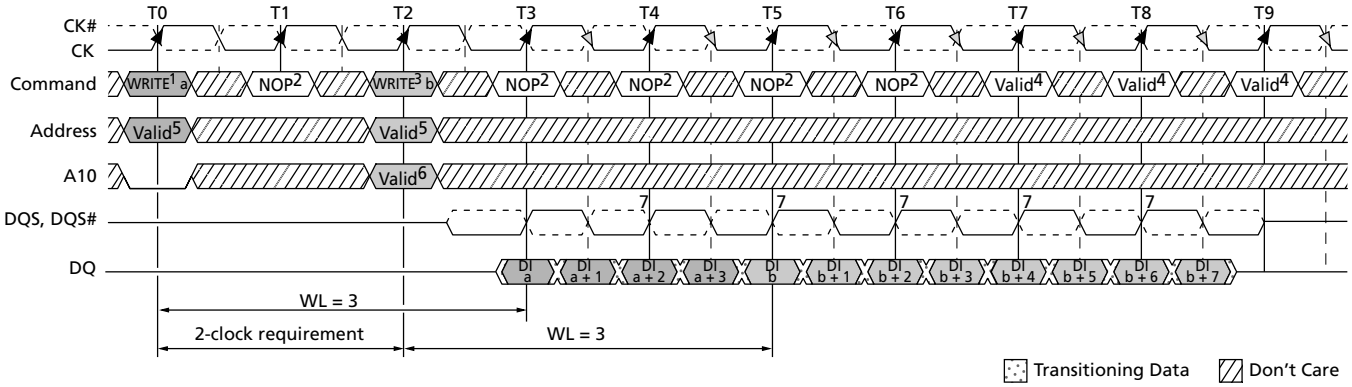


Notes:
1. BL = 8 required and auto precharge must be disabled (A10 = LOW).
2. The NOP or COMMAND INHIBIT commands are valid. The PRECHARGE command cannot be issued to banks used for WRITEs at T0 and T2.
3. The interrupting WRITE command must be issued exactly 2 × $^{t}$CK from previous WRITE.
4. The earliest WRITE-to-PRECHARGE timing for WRITE at T0 is WL + BL/2 + $^{t}$WR where $^{t}$WR starts with T7 and not T5 (because BL = 8 from MR and not the truncated length).
5. The WRITE command can be issued to any valid bank and row address (WRITE command at T0 and T2 can be either same bank or different bank).
6. Auto precharge can be either enabled (A10 = HIGH) or disabled (A10 = LOW) by the interrupting WRITE command.
7. Subsequent rising DQS signals must align to the clock within $^{t}$DQSS.
8. Example shown uses AL = 0; CL = 4, BL = 8.


Micron Technology, Inc. reserves the right to change products or specifications without notice.
© 2007 Micron Technology, Inc. All rights reserved.

**Figure 62: WRITE-to-READ**

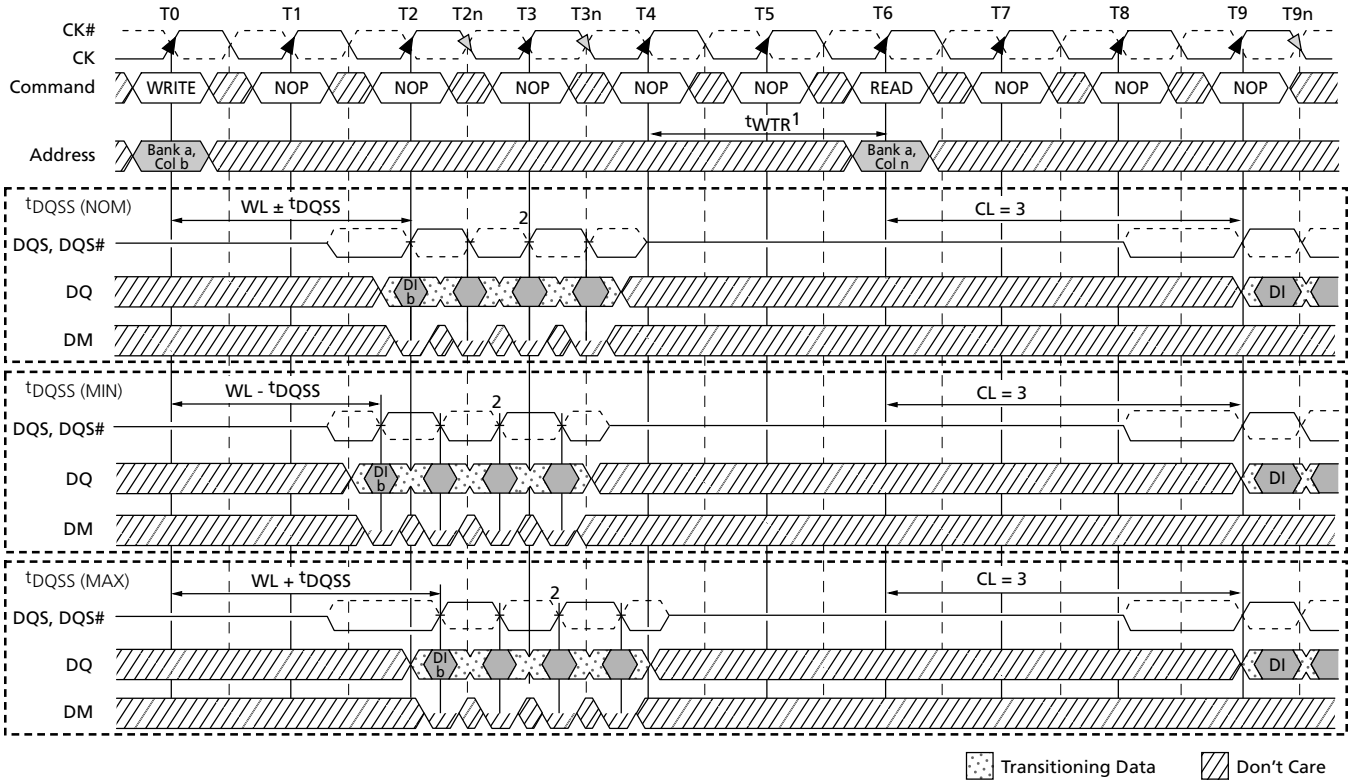


Notes:
1. $^{t}$WTR is required for any READ following a WRITE to the same device, but it is not required between module ranks.
2. Subsequent rising DQS signals must align to the clock within $^{t}$DQSS.
3. DI *b* = data-in for column *b*; DO *n* = data-out from column *n*.
4. BL = 4, AL = 0, CL = 3; thus, WL = 2.
5. One subsequent element of data-in is applied in the programmed order following DI *b*.
6. $^{t}$WTR is referenced from the first positive CK edge after the last data-in pair.
7. A10 is LOW with the WRITE command (auto precharge is disabled).
8. The number of clock cycles required to meet $^{t}$WTR is either 2 or $^{t}$WTR/$^{t}$CK, whichever is greater.


Micron Technology, Inc. reserves the right to change products or specifications without notice.
© 2007 Micron Technology, Inc. All rights reserved.

**Figure 63: WRITE-to-PRECHARGE**

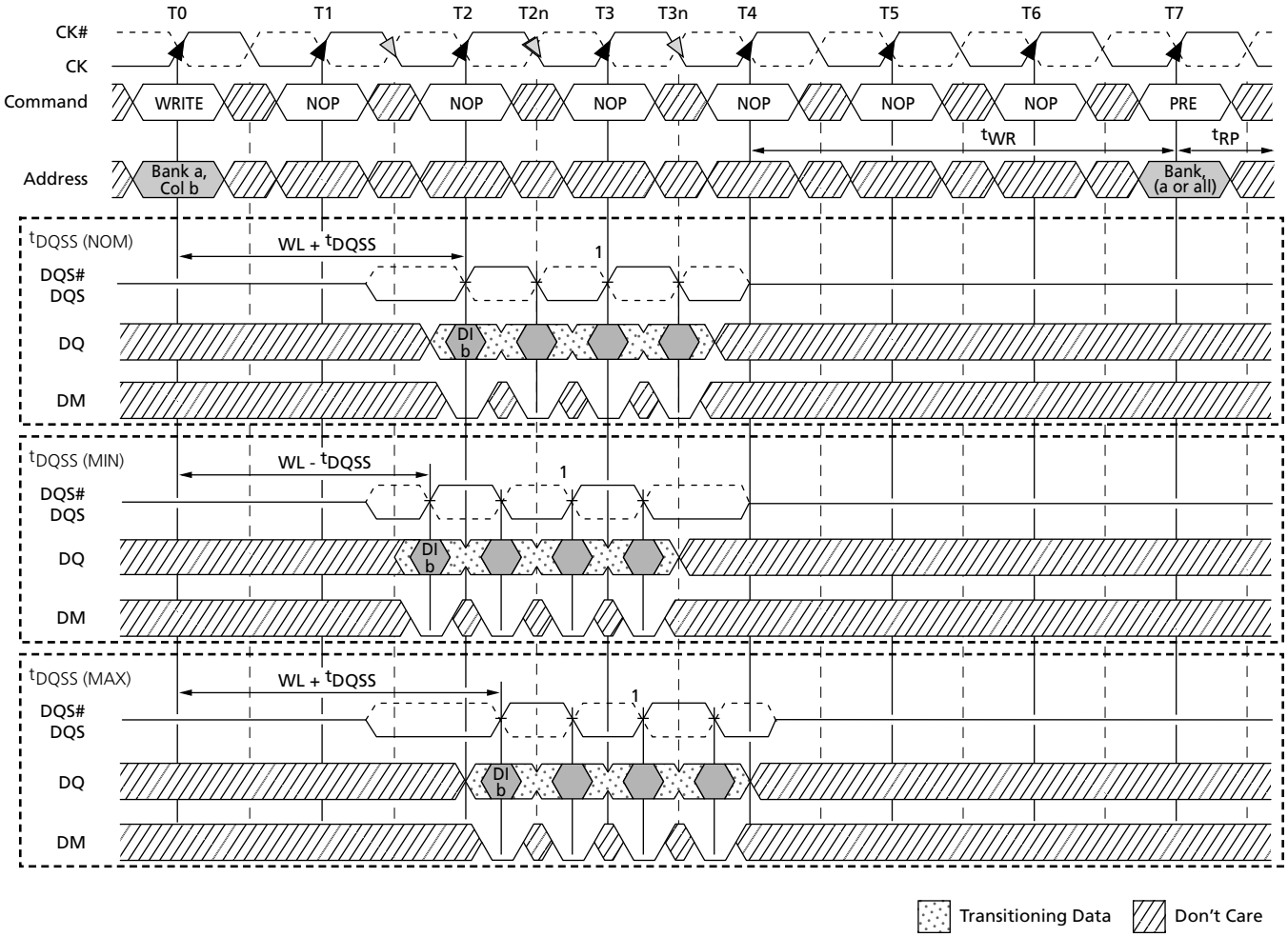


Notes:
1. Subsequent rising DQS signals must align to the clock within $^{t}$DQSS.
2. DI *b* = data-in for column *b*.
3. Three subsequent elements of data-in are applied in the programmed order following DI *b*.
4. BL = 4, CL = 3, AL = 0; thus, WL = 2.
5. $^{t}$WR is referenced from the first positive CK edge after the last data-in pair.
6. The PRECHARGE and WRITE commands are to the same bank. However, the PRECHARGE and WRITE commands may be to different banks, in which case $^{t}$WR is not required and the PRECHARGE command could be applied earlier.
7. A10 is LOW with the WRITE command (auto precharge is disabled).


Micron Technology, Inc. reserves the right to change products or specifications without notice.
© 2007 Micron Technology, Inc. All rights reserved.

**Figure 64: Bank Write – Without Auto Precharge**

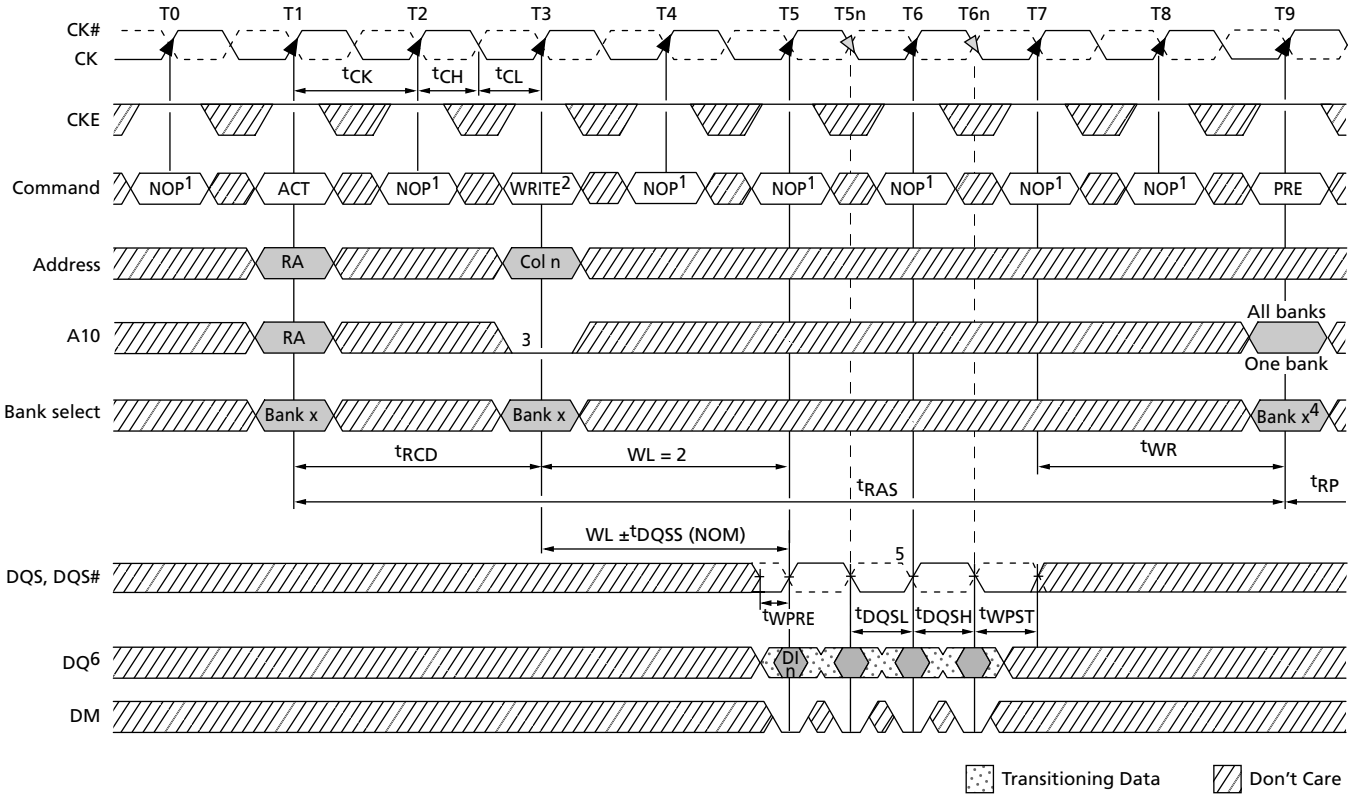


Notes:
1. NOP commands are shown for ease of illustration; other commands may be valid at these times.
2. BL = 4 and AL = 0 in the case shown.
3. Disable auto precharge.
4. "Don't Care" if A10 is HIGH at T9.
5. Subsequent rising DQS signals must align to the clock within $^{t}$DQSS.
6. DI *n* = data-in for column *n*; subsequent elements are applied in the programmed order.
7. $^{t}$DSH is applicable during $^{t}$DQSS (MIN) and is referenced from CK T5 or T6.
8. $^{t}$DSS is applicable during $^{t}$DQSS (MAX) and is referenced from CK T6 or T7.


Micron Technology, Inc. reserves the right to change products or specifications without notice.
© 2007 Micron Technology, Inc. All rights reserved.

**Figure 65: Bank Write – with Auto Precharge**

Notes:
1. NOP commands are shown for ease of illustration; other commands may be valid at these times.
2. BL = 4 and AL = 0 in the case shown.
3. Enable auto precharge.
4. WR is programmed via MR9–MR11 and is calculated by dividing $^{t}$WR (in ns) by $^{t}$CK and rounding up to the next integer value.
5. Subsequent rising DQS signals must align to the clock within $^{t}$DQSS.
6. DI *n* = data-in from column *n*; subsequent elements are applied in the programmed order.
7. $^{t}$DSH is applicable during $^{t}$DQSS (MIN) and is referenced from CK T5 or T6.
8. $^{t}$DSS is applicable during $^{t}$DQSS (MAX) and is referenced from CK T6 or T7.


Micron Technology, Inc. reserves the right to change products or specifications without notice.
© 2007 Micron Technology, Inc. All rights reserved.

**Figure 66: WRITE – DM Operation**

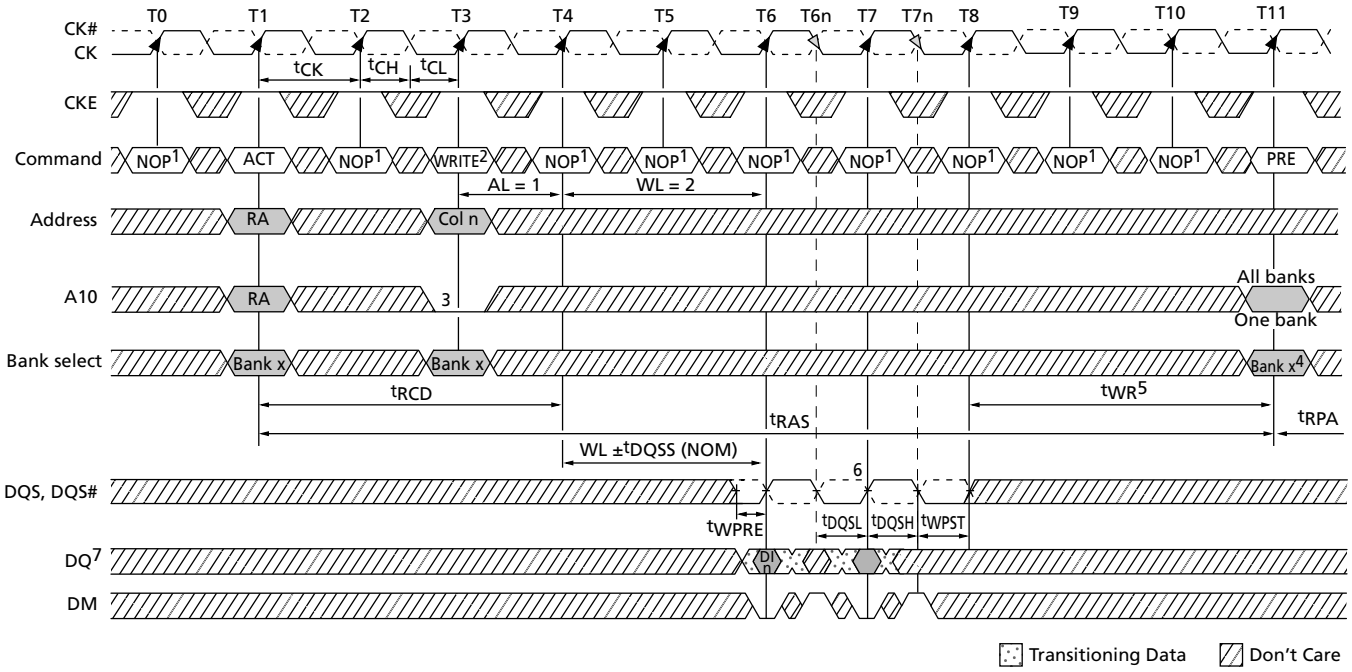


Notes:
1. NOP commands are shown for ease of illustration; other commands may be valid at these times.
2. BL = 4, AL = 1, and WL = 2 in the case shown.
3. Disable auto precharge.
4. "Don't Care" if A10 is HIGH at T11.
5. $^{t}$WR starts at the end of the data burst regardless of the data mask condition.
6. Subsequent rising DQS signals must align to the clock within $^{t}$DQSS.
7. DI *n* = data-in for column *n*; subsequent elements are applied in the programmed order.
8. $^{t}$DSH is applicable during $^{t}$DQSS (MIN) and is referenced from CK T6 or T7.
9. $^{t}$DSS is applicable during $^{t}$DQSS (MAX) and is referenced from CK T7 or T8.


Micron Technology, Inc. reserves the right to change products or specifications without notice.
© 2007 Micron Technology, Inc. All rights reserved.

**Figure 67: Data Input Timing**

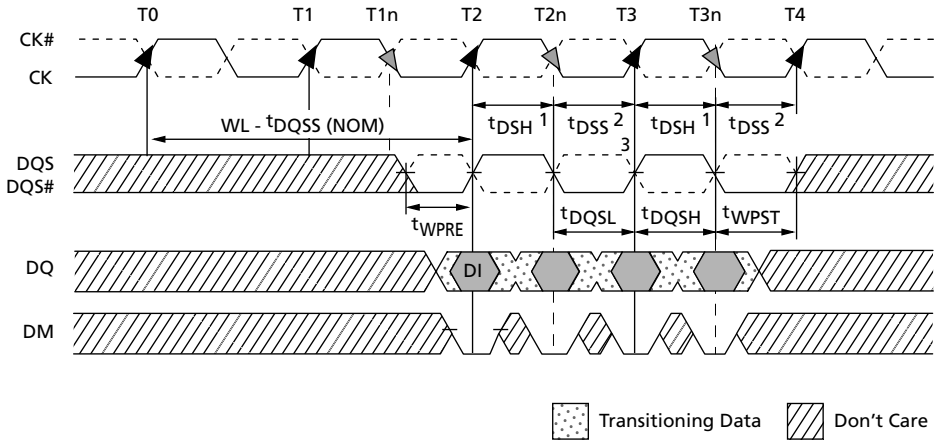


Notes:
1. $^{t}$DSH (MIN) generally occurs during $^{t}$DQSS (MIN).
2. $^{t}$DSS (MIN) generally occurs during $^{t}$DQSS (MAX).
3. Subsequent rising DQS signals must align to the clock within $^{t}$DQSS.
4. WRITE command issued at T0.
5. For x16, LDQS controls the lower byte and UDQS controls the upper byte.
6. WRITE command with WL = 2 (CL = 3, AL = 0) issued at T0.


Micron Technology, Inc. reserves the right to change products or specifications without notice.
© 2007 Micron Technology, Inc. All rights reserved.

# PRECHARGE

Precharge can be initiated by either a manual PRECHARGE command or by an autoprecharge in conjunction with either a READ or WRITE command. Precharge will deactivate the open row in a particular bank or the open row in all banks. The PRECHARGE operation is shown in the previous READ and WRITE operation sections.

During a manual PRECHARGE command, the A10 input determines whether one or all banks are to be precharged. In the case where only one bank is to be precharged, bank address inputs determine the bank to be precharged. When all banks are to be precharged, the bank address inputs are treated as "Don't Care."

Once a bank has been precharged, it is in the idle state and must be activated prior to any READ or WRITE commands being issued to that bank. When a single-bank PRECHARGE command is issued, $^{t}$RP timing applies. When the PRECHARGE (ALL) command is issued, $^{t}$RPA timing applies, regardless of the number of banks opened.


Micron Technology, Inc. reserves the right to change products or specifications without notice.
© 2007 Micron Technology, Inc. All rights reserved.

# REFRESH

The commercial temperature DDR2 SDRAM requires REFRESH cycles at an average interval of 7.8125µs (MAX) and all rows in all banks must be refreshed at least once every 64ms. The refresh period begins when the REFRESH command is registered and ends $^{t}$RFC (MIN) later. The average interval must be reduced to 3.9µs (MAX) when $T_C$ exceeds 85°C.

**Figure 68: Refresh Mode**

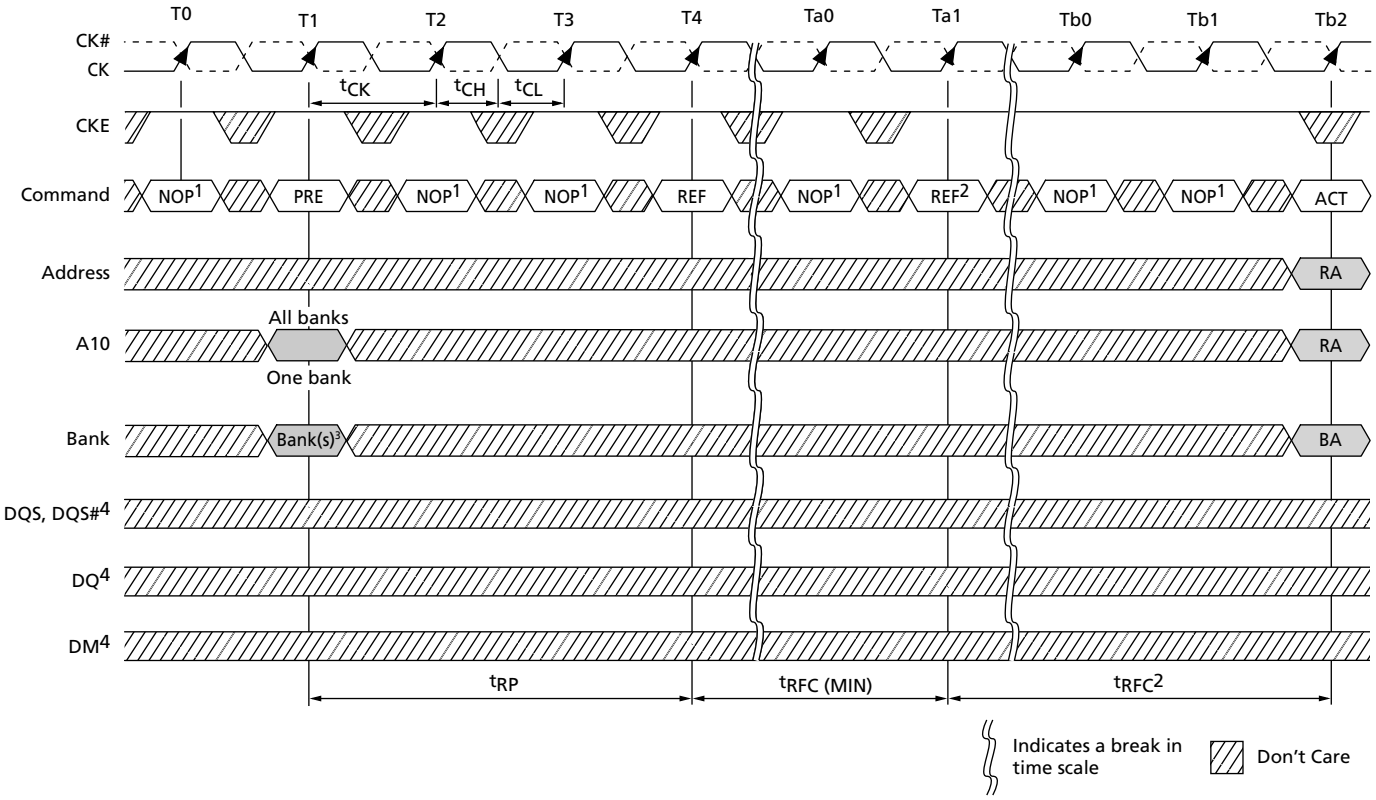


Notes:
1. NOP commands are shown for ease of illustration; other valid commands may be possible at these times. CKE must be active during clock positive transitions.
2. The second REFRESH is not required and is only shown as an example of two back-to-back REFRESH commands.
3. "Don't Care" if A10 is HIGH at this point; A10 must be HIGH if more than one bank is active (must precharge all active banks).
4. DM, DQ, and DQS signals are all "Don't Care"/High-Z for operations shown.


Micron Technology, Inc. reserves the right to change products or specifications without notice.
© 2007 Micron Technology, Inc. All rights reserved.

# SELF REFRESH

The SELF REFRESH command is initiated when CKE is LOW. The differential clock should remain stable and meet $^{t}$CKE specifications at least 1 × $^{t}$CK after entering self refresh mode. The procedure for exiting self refresh requires a sequence of commands. First, the differential clock must be stable and meet $^{t}$CK specifications at least 1 × $^{t}$CK prior to CKE going back to HIGH. Once CKE is HIGH ($^{t}$CKE [MIN] has been satisfied with three clock registrations), the DDR2 SDRAM must have NOP or DESELECT commands issued for $^{t}$XSNR. A simple algorithm for meeting both refresh and DLL requirements is used to apply NOP or DESELECT commands for 200 clock cycles before applying any other command.


Micron Technology, Inc. reserves the right to change products or specifications without notice.
© 2007 Micron Technology, Inc. All rights reserved.

**Figure 69: Self Refresh**

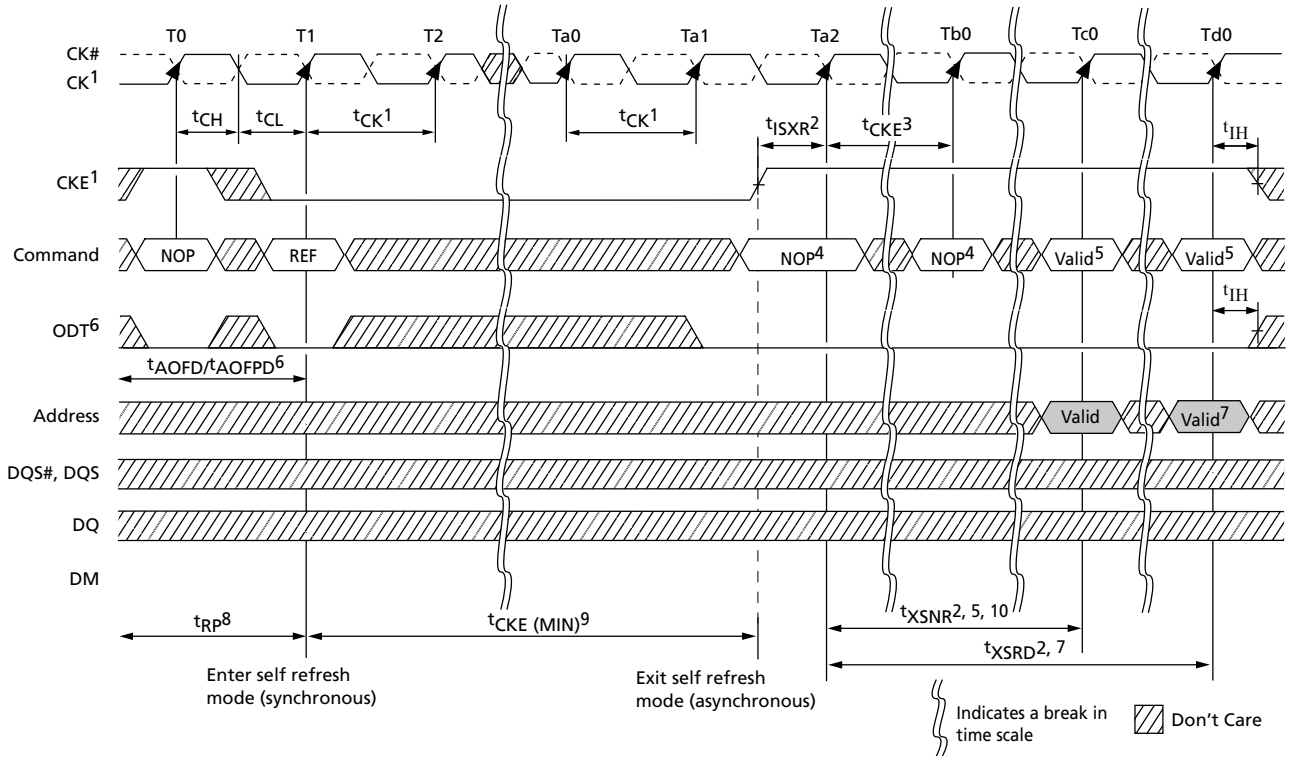


Notes:
1. Clock must be stable and meeting $^{t}$CK specifications at least 1 × $^{t}$CK after entering self refresh mode and at least 1 × $^{t}$CK prior to exiting self refresh mode.
2. Self refresh exit is asynchronous; however, $^{t}$XSNR and $^{t}$XSRD timing starts at the first rising clock edge where CKE HIGH satisfies $^{t}$ISXR.
3. CKE must stay HIGH until $^{t}$XSRD is met; however, if self refresh is being re-entered, CKE may go back LOW after $^{t}$XSNR is satisfied.
4. NOP or DESELECT commands are required prior to exiting self refresh until state Tc0, which allows any nonREAD command.
5. $^{t}$XSNR is required before any nonREAD command can be applied.
6. ODT must be disabled and $R_{TT}$ off ($^{t}$AOFD and $^{t}$AOFPD have been satisfied) prior to entering self refresh at state T1.
7. $^{t}$XSRD (200 cycles of CK) is required before a READ command can be applied at state Td0.
8. Device must be in the all banks idle state prior to entering self refresh mode.
9. After self refresh has been entered, $^{t}$CKE (MIN) must be satisfied prior to exiting self refresh.
10. Upon exiting SELF REFRESH, ODT must remain LOW until $^{t}$XSRD is satisfied.


Micron Technology, Inc. reserves the right to change products or specifications without notice.
© 2007 Micron Technology, Inc. All rights reserved.

# Power-Down Mode

DDR2 SDRAM supports multiple power-down modes that allow significant power savings over normal operating modes. CKE is used to enter and exit different power-down modes. Power-down entry and exit timings are shown in Figure 70 (page 125). Detailed power-down entry conditions are shown in Figure 71 (page 127)–Figure 78 (page 130). Table 44 (page 126) is the CKE Truth Table.

DDR2 SDRAM requires CKE to be registered HIGH (active) at all times that an access is in progress—from the issuing of a READ or WRITE command until completion of the burst. Thus, a clock suspend is not supported. For READs, a burst completion is defined when the read postamble is satisfied; for WRITEs, a burst completion is defined when the write postamble and $^{t}$WR (WRITE-to-PRECHARGE command) or $^{t}$WTR (WRITE-to-READ command) are satisfied, as shown in Figure 73 (page 128) and Figure 74 (page 128) on Figure 74 (page 128). The number of clock cycles required to meet $^{t}$WTR is either two or $^{t}$WTR/$^{t}$CK, whichever is greater.

Power-down mode (see Figure 70 (page 125)) is entered when CKE is registered low coincident with an NOP or DESELECT command. CKE is not allowed to go LOW during a mode register or extended mode register command time, or while a READ or WRITE operation is in progress. If power-down occurs when all banks are idle, this mode is referred to as precharge power-down. If power-down occurs when there is a row active in any bank, this mode is referred to as active power-down. Entering power-down deactivates the input and output buffers, excluding CK, CK#, ODT, and CKE. For maximum power savings, the DLL is frozen during precharge power-down. Exiting active power-down requires the device to be at the same voltage and frequency as when it entered power-down. Exiting precharge power-down requires the device to be at the same voltage as when it entered power-down; however, the clock frequency is allowed to change (see Precharge Power-Down Clock Frequency Change (page 131)).

The maximum duration for either active or precharge power-down is limited by the refresh requirements of the device $^{t}$RFC (MAX). The minimum duration for power-down entry and exit is limited by the $^{t}$CKE (MIN) parameter. The following must be maintained while in power-down mode: CKE LOW, a stable clock signal, and stable power supply signals at the inputs of the DDR2 SDRAM. All other input signals are “Don’t Care” except ODT. Detailed ODT timing diagrams for different power-down modes are shown in Figure 83 (page 137)–Figure 88 (page 141).

The power-down state is synchronously exited when CKE is registered HIGH (in conjunction with a NOP or DESELECT command), as shown in Figure 70 (page 125).


Micron Technology, Inc. reserves the right to change products or specifications without notice.
© 2007 Micron Technology, Inc. All rights reserved.

**Figure 70: Power-Down**

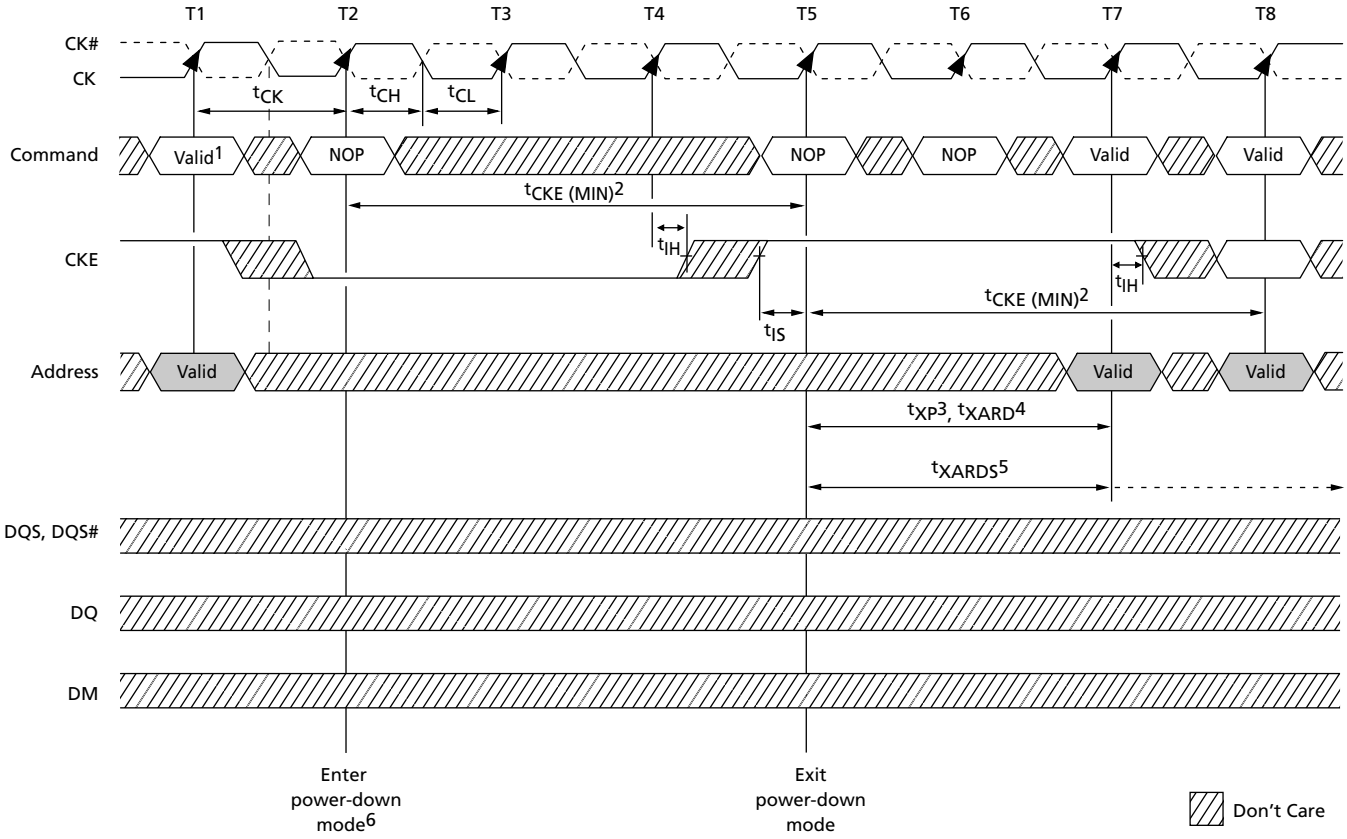


Notes:
1. If this command is a PRECHARGE (or if the device is already in the idle state), then the power-down mode shown is precharge power-down. If this command is an ACTIVATE (or if at least one row is already active), then the power-down mode shown is active power-down.
2. $^{t}$CKE (MIN) of three clocks means CKE must be registered on three consecutive positive clock edges. CKE must remain at the valid input level the entire time it takes to achieve the three clocks of registration. Thus, after any CKE transition, CKE may not transition from its valid level during the time period of $^{t}$IS + 2 × $^{t}$CK + $^{t}$IH. CKE must not transition during its $^{t}$IS and $^{t}$IH window.
3. $^{t}$XP timing is used for exit precharge power-down and active power-down to any non-READ command.
4. $^{t}$XARD timing is used for exit active power-down to READ command if fast exit is selected via MR (bit 12 = 0).
5. $^{t}$XARDS timing is used for exit active power-down to READ command if slow exit is selected via MR (bit 12 = 1).
6. No column accesses are allowed to be in progress at the time power-down is entered. If the DLL was not in a locked state when CKE went LOW, the DLL must be reset after exiting power-down mode for proper READ operation.


Micron Technology, Inc. reserves the right to change products or specifications without notice.
© 2007 Micron Technology, Inc. All rights reserved.

**Table 44: Truth Table – CKE**

Notes 1–4 apply to the entire table

| Current State | CKE | | Command (*n*) CS#, RAS#, CAS#, WE# | Action (*n*) | Notes |
|---|---|---|---|---|---|
| | Previous Cycle (*n* - 1) | Current Cycle (*n*) | | | |
| Power-down | L | L | X | Maintain power-down | 5, 6 |
| | L | H | DESELECT or NOP | Power-down exit | 7, 8 |
| Self refresh | L | L | X | Maintain self refresh | 6 |
| | L | H | DESELECT or NOP | Self refresh exit | 7, 9, 10 |
| Bank(s) active | H | L | DESELECT or NOP | Active power-down entry | 7, 8, 11, 12 |
| All banks idle | H | L | DESELECT or NOP | Precharge power-down entry | 7, 8, 11 |
| | H | L | Refresh | Self refresh entry | 10, 12, 13 |
| | H | H | Shown in Table 37 (page 74) | | 14 |

Notes:
1. CKE (*n*) is the logic state of CKE at clock edge *n*; CKE (*n* - 1) was the state of CKE at the previous clock edge.
2. Current state is the state of the DDR2 SDRAM immediately prior to clock edge *n*.
3. Command (*n*) is the command registered at clock edge *n*, and action (*n*) is a result of command (*n*).
4. The state of ODT does not affect the states described in this table. The ODT function is not available during self refresh (see ODT Timing (page 134) for more details and specific restrictions).
5. Power-down modes do not perform any REFRESH operations. The duration of power-down mode is therefore limited by the refresh requirements.
6. "X" means "Don't Care" (including floating around $V_{REF}$) in self refresh and power-down. However, ODT must be driven high or low in power-down if the ODT function is enabled via EMR.
7. All states and sequences not shown are illegal or reserved unless explicitly described elsewhere in this document.
8. Valid commands for power-down entry and exit are NOP and DESELECT only.
9. On self refresh exit, DESELECT or NOP commands must be issued on every clock edge occurring during the $^{t}$XSNR period. READ commands may be issued only after $^{t}$XSRD (200 clocks) is satisfied.
10. Valid commands for self refresh exit are NOP and DESELECT only.
11. Power-down and self refresh can not be entered while READ or WRITE operations, LOAD MODE operations, or PRECHARGE operations are in progress. See SELF REFRESH (page 122) and SELF REFRESH (page 80) for a list of detailed restrictions.
12. Minimum CKE high time is $^{t}$CKE = 3 × $^{t}$CK. Minimum CKE LOW time is $^{t}$CKE = 3 × $^{t}$CK. This requires a minimum of 3 clock cycles of registration.
13. Self refresh mode can only be entered from the all banks idle state.
14. Must be a legal command, as defined in Table 37 (page 74).


Micron Technology, Inc. reserves the right to change products or specifications without notice.
© 2007 Micron Technology, Inc. All rights reserved.

**Figure 71: READ-to-Power-Down or Self Refresh Entry**

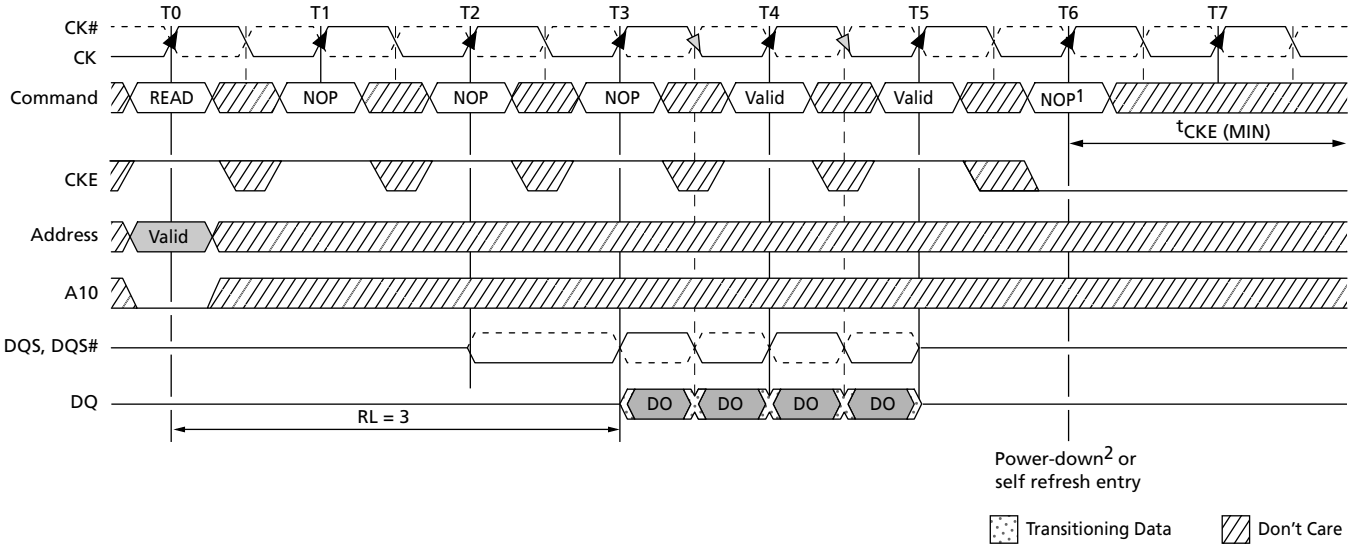


Notes: 1. In the example shown, READ burst completes at T5; earliest power-down or self refresh entry is at T6.
2. Power-down or self refresh entry may occur after the READ burst completes.

**Figure 72: READ with Auto Precharge-to-Power-Down or Self Refresh Entry**

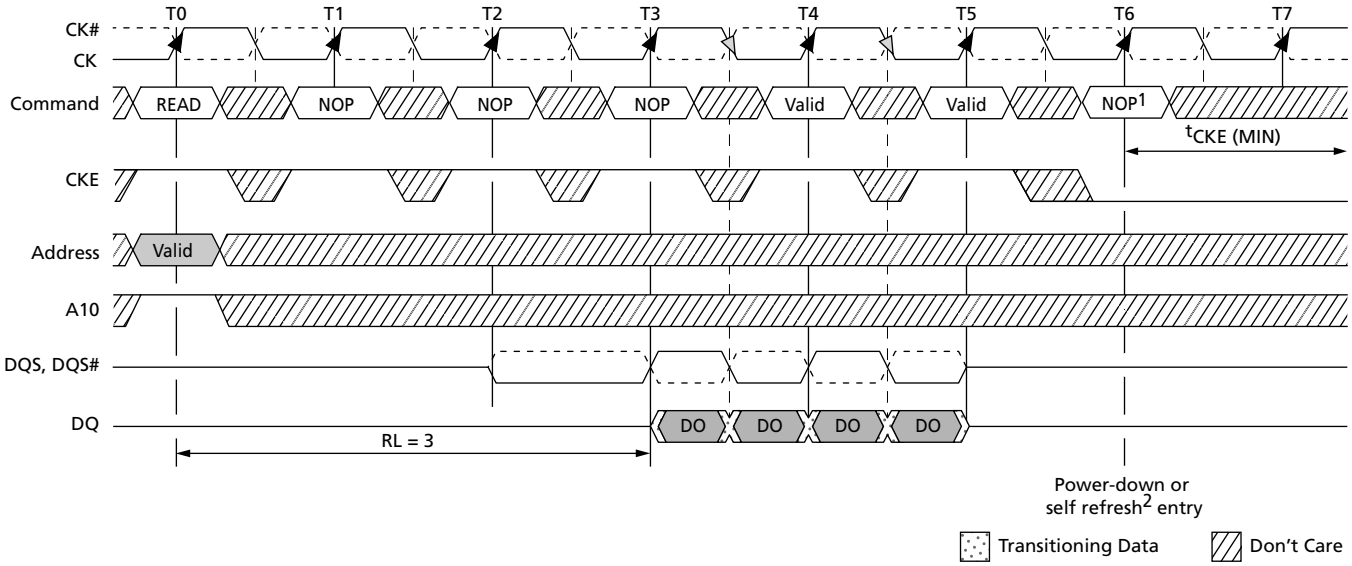


Notes: 1. In the example shown, READ burst completes at T5; earliest power-down or self refresh entry is at T6.
2. Power-down or self refresh entry may occur after the READ burst completes.


Micron Technology, Inc. reserves the right to change products or specifications without notice.
© 2007 Micron Technology, Inc. All rights reserved.

**Figure 73: WRITE-to-Power-Down or Self Refresh Entry**

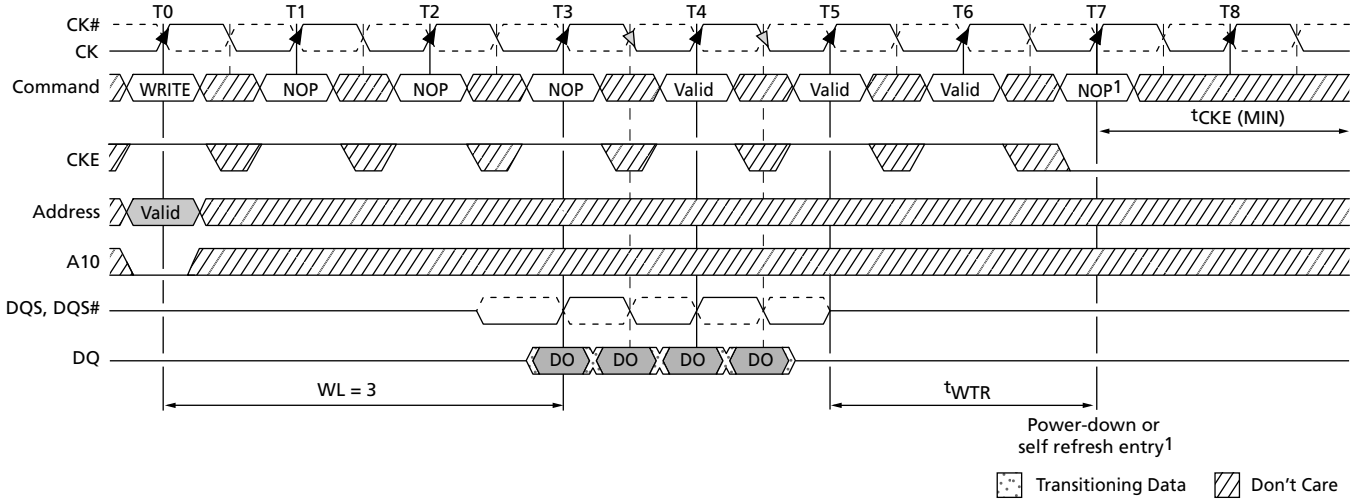


Note: 1. Power-down or self refresh entry may occur after the WRITE burst completes.

**Figure 74: WRITE with Auto Precharge-to-Power-Down or Self Refresh Entry**

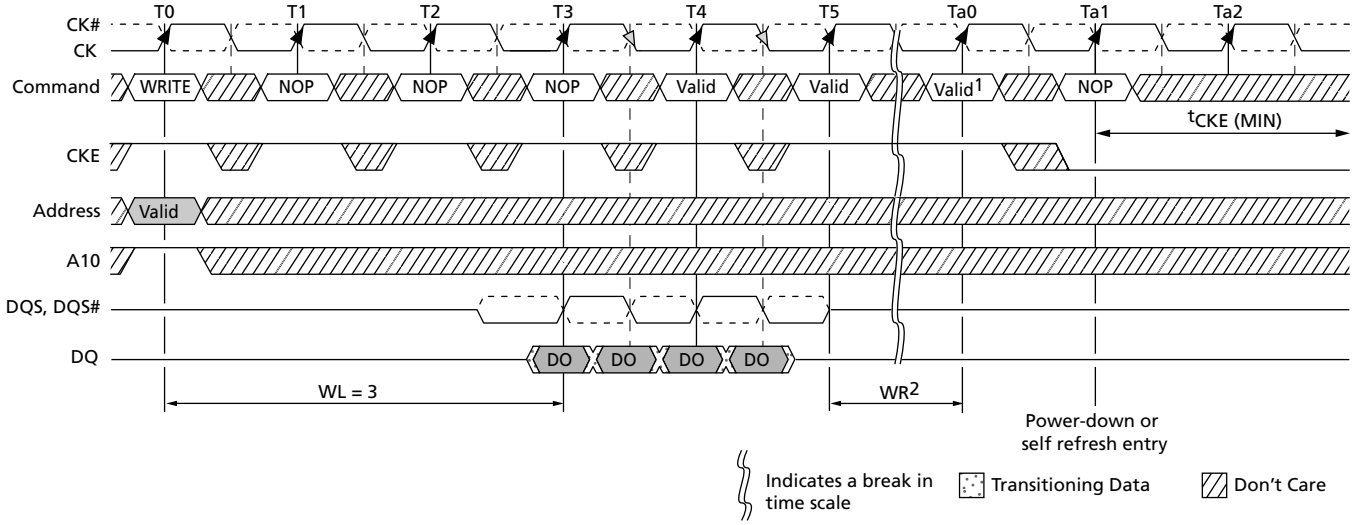


Notes: 1. Internal PRECHARGE occurs at Ta0 when WR has completed; power-down entry may occur 1 x $^{t}$CK later at Ta1, prior to $^{t}$RP being satisfied.
2. WR is programmed through MR9–MR11 and represents ($^{t}$WR [MIN] ns/$^{t}$CK) rounded up to next integer $^{t}$CK.


Micron Technology, Inc. reserves the right to change products or specifications without notice.
© 2007 Micron Technology, Inc. All rights reserved.

**Figure 75: REFRESH Command-to-Power-Down Entry**

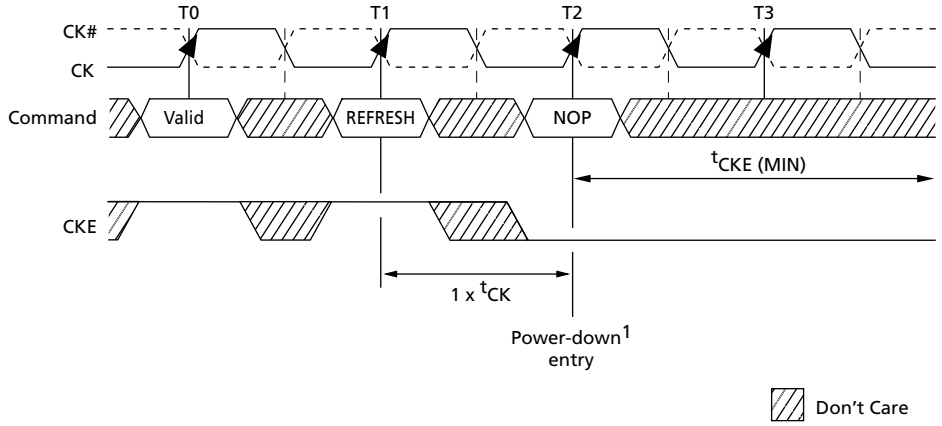


Note: 1. The earliest precharge power-down entry may occur is at T2, which is 1 × $^{t}$CK after the REFRESH command. Precharge power-down entry occurs prior to $^{t}$RFC (MIN) being satisfied.

**Figure 76: ACTIVATE Command-to-Power-Down Entry**

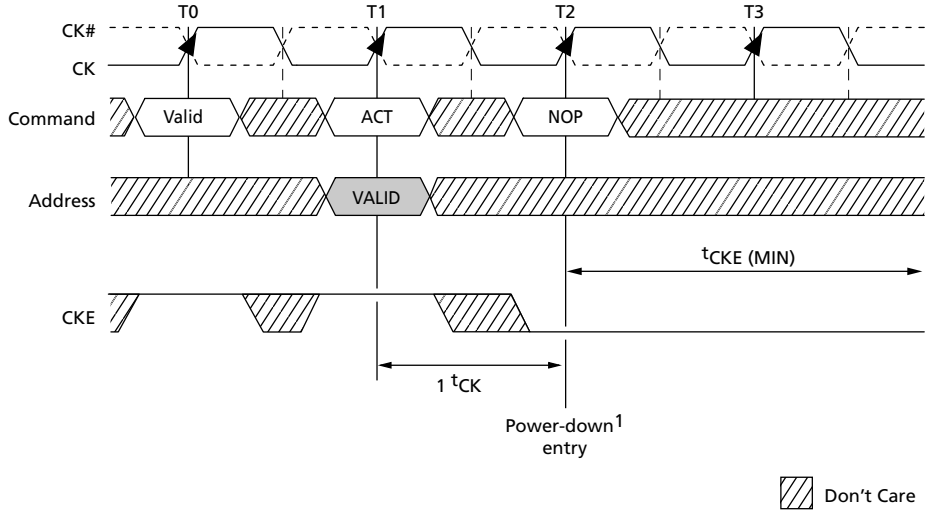


Note: 1. The earliest active power-down entry may occur is at T2, which is 1 × $^{t}$CK after the ACTIVATE command. Active power-down entry occurs prior to $^{t}$RCD (MIN) being satisfied.


Micron Technology, Inc. reserves the right to change products or specifications without notice.
© 2007 Micron Technology, Inc. All rights reserved.

**Figure 77: PRECHARGE Command-to-Power-Down Entry**

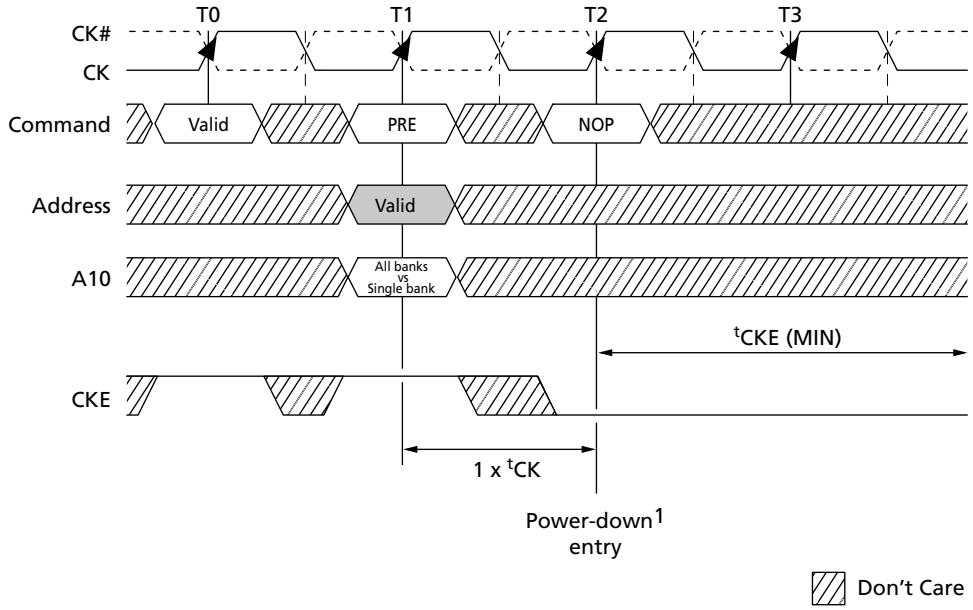


Note: 1. The earliest precharge power-down entry may occur is at T2, which is 1 × $^{t}$CK after the PRECHARGE command. Precharge power-down entry occurs prior to $^{t}$RP (MIN) being satisfied.

**Figure 78: LOAD MODE Command-to-Power-Down Entry**

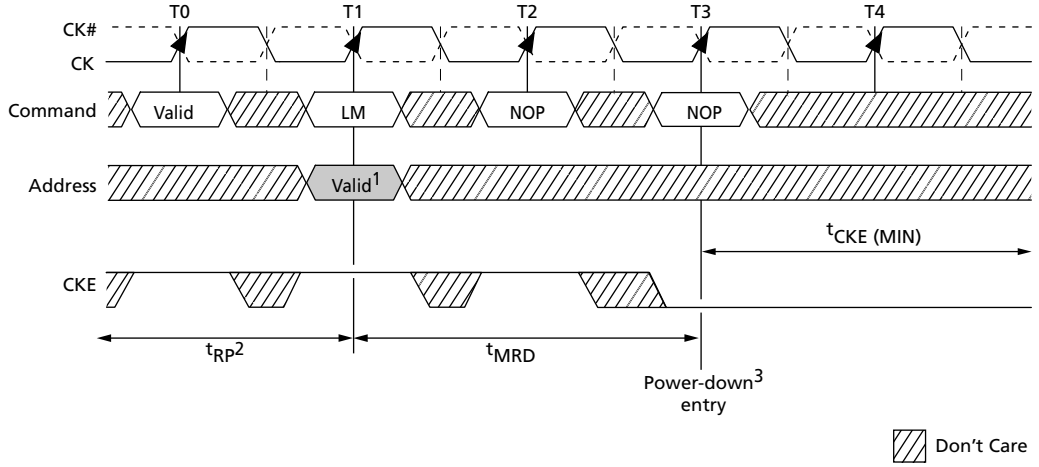


Notes: 1. Valid address for LM command includes MR, EMR, EMR(2), and EMR(3) registers.
2. All banks must be in the precharged state and $^{t}$RP met prior to issuing LM command.
3. The earliest precharge power-down entry is at T3, which is after $^{t}$MRD is satisfied.


Micron Technology, Inc. reserves the right to change products or specifications without notice.
© 2007 Micron Technology, Inc. All rights reserved.

# Precharge Power-Down Clock Frequency Change

When the DDR2 SDRAM is in precharge power-down mode, ODT must be turned off and CKE must be at a logic LOW level. A minimum of two differential clock cycles must pass after CKE goes LOW before clock frequency may change. The device input clock frequency is allowed to change only within minimum and maximum operating frequencies specified for the particular speed grade. During input clock frequency change, ODT and CKE must be held at stable LOW levels. When the input clock frequency is changed, new stable clocks must be provided to the device before precharge power-down may be exited, and DLL must be reset via MR after precharge power-down exit. Depending on the new clock frequency, additional LM commands might be required to adjust the CL, WR, AL, and so forth. Depending on the new clock frequency, an additional LM command might be required to appropriately set the WR MR9, MR10, MR11. During the DLL relock period of 200 cycles, ODT must remain off. After the DLL lock time, the DRAM is ready to operate with a new clock frequency.

**Figure 79: Input Clock Frequency Change During Precharge Power-Down Mode**

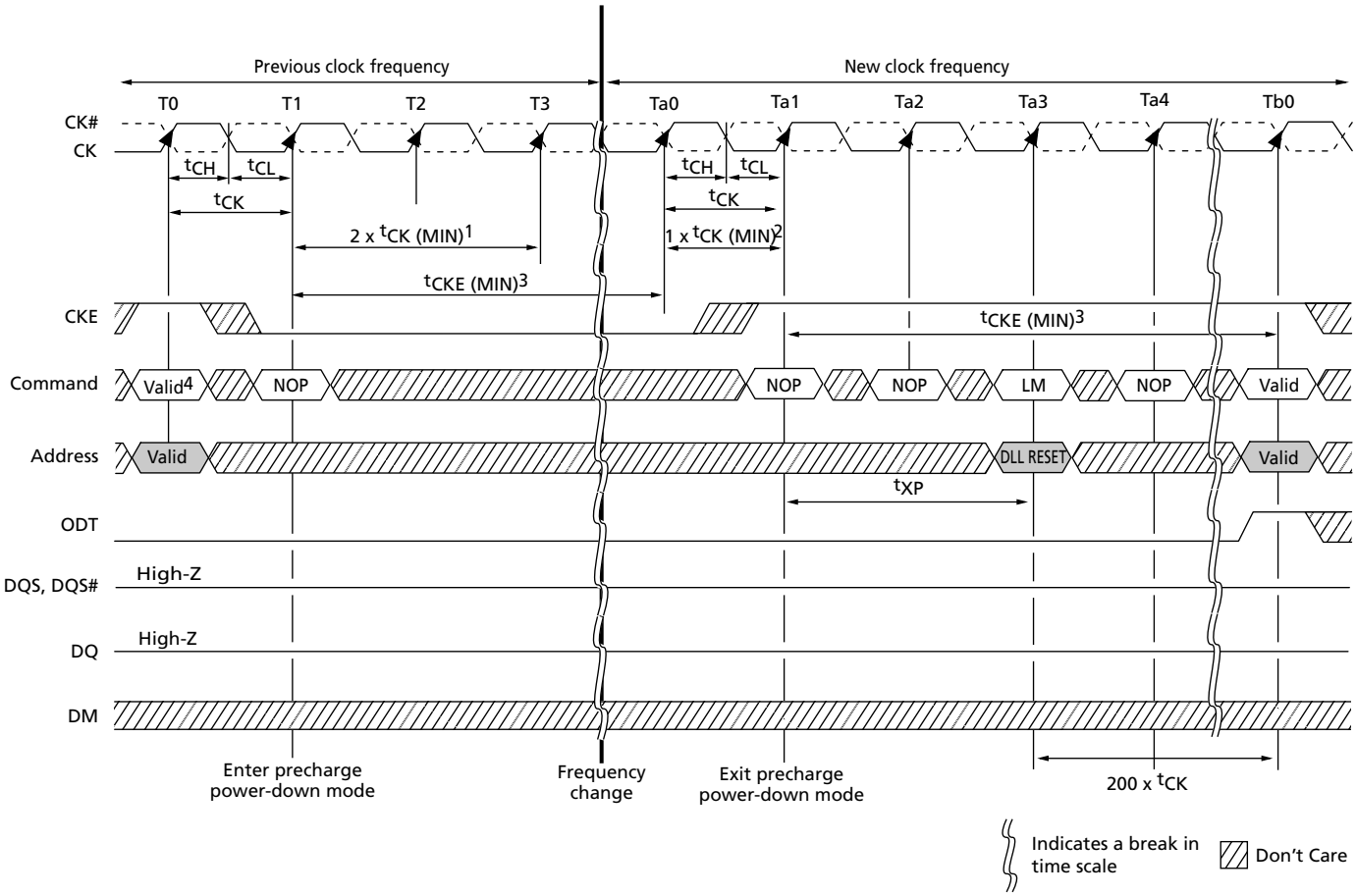


Notes:
1. A minimum of 2 × $^{t}$CK is required after entering precharge power-down prior to changing clock frequencies.
2. When the new clock frequency has changed and is stable, a minimum of 1 × $^{t}$CK is required prior to exiting precharge power-down.


Micron Technology, Inc. reserves the right to change products or specifications without notice.
© 2007 Micron Technology, Inc. All rights reserved.

3. Minimum CKE high time is $^{t}$CKE = 3 × $^{t}$CK. Minimum CKE LOW time is $^{t}$CKE = 3 × $^{t}$CK. This requires a minimum of three clock cycles of registration.
4. If this command is a PRECHARGE (or if the device is already in the idle state), then the power-down mode shown is precharge power-down, which is required prior to the clock frequency change.

# Reset

## CKE Low Anytime

DDR2 SDRAM applications may go into a reset state anytime during normal operation. If an application enters a reset condition, CKE is used to ensure the DDR2 SDRAM device resumes normal operation after reinitializing. All data will be lost during a reset condition; however, the DDR2 SDRAM device will continue to operate properly if the following conditions outlined in this section are satisfied.

The reset condition defined here assumes all supply voltages ($V_{DD}$, $V_{DDQ}$, $V_{DDL}$, and $V_{REF}$) are stable and meet all DC specifications prior to, during, and after the RESET operation. All other input balls of the DDR2 SDRAM device are a “Don’t Care” during RESET with the exception of CKE.

If CKE asynchronously drops LOW during any valid operation (including a READ or WRITE burst), the memory controller must satisfy the timing parameter $^{t}$DELAY before turning off the clocks. Stable clocks must exist at the CK, CK# inputs of the DRAM before CKE is raised HIGH, at which time the normal initialization sequence must occur (see Initialization). The DDR2 SDRAM device is now ready for normal operation after the initialization sequence. Figure 80 (page 133) shows the proper sequence for a RESET operation.


Micron Technology, Inc. reserves the right to change products or specifications without notice.
© 2007 Micron Technology, Inc. All rights reserved.

**Figure 80: RESET Function**

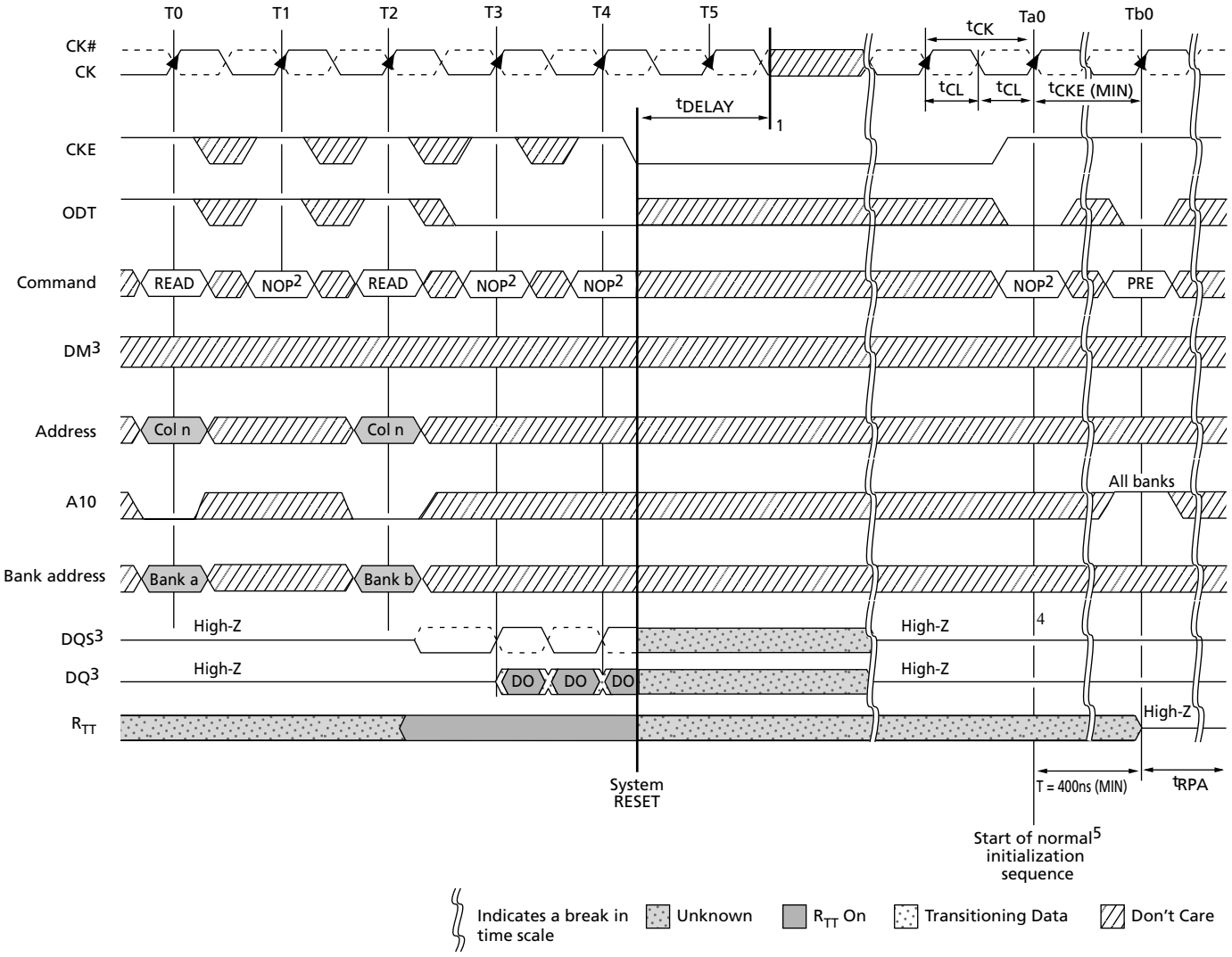


Notes:
1. $V_{DD}$, $V_{DDL}$, $V_{DDQ}$, $V_{TT}$, and $V_{REF}$ must be valid at all times.
2. Either NOP or DESELECT command may be applied.
3. DM represents DM for x4/x8 configuration and UDM, LDM for x16 configuration. DQS represents DQS, DQS#, UDQS, UDQS#, LDQS, LDQS#, RDQS, and RDQS# for the appropriate configuration (x4, x8, x16).
4. In certain cases where a READ cycle is interrupted, CKE going HIGH may result in the completion of the burst.
5. Initialization timing is shown in Figure 43 (page 92).


Micron Technology, Inc. reserves the right to change products or specifications without notice.
© 2007 Micron Technology, Inc. All rights reserved.

## ODT Timing

Once a 12ns delay ($^{t}$MOD) has been satisfied, and after the ODT function has been enabled via the EMR LOAD MODE command, ODT can be accessed under two timing categories. ODT will operate either in synchronous mode or asynchronous mode, depending on the state of CKE. ODT can switch anytime except during self refresh mode and a few clocks after being enabled via EMR, as shown in Figure 81 (page 135).

There are two timing categories for ODT—turn-on and turn-off. During active mode (CKE HIGH) and fast-exit power-down mode (any row of any bank open, CKE LOW, MR[12 = 0]), $^{t}$AOND, $^{t}$AON, $^{t}$AOFD, and $^{t}$AOF timing parameters are applied, as shown in Figure 83 (page 137).

During slow-exit power-down mode (any row of any bank open, CKE LOW, MR[12] = 1) and precharge power-down mode (all banks/rows precharged and idle, CKE LOW), $^{t}$AONPD and $^{t}$AOFPD timing parameters are applied, as shown in Figure 84 (page 137).

ODT turn-off timing, prior to entering any power-down mode, is determined by the parameter $^{t}$ANPD (MIN), as shown in Figure 85 (page 138). At state T2, the ODT HIGH signal satisfies $^{t}$ANPD (MIN) prior to entering power-down mode at T5. When $^{t}$ANPD (MIN) is satisfied, $^{t}$AOFD and $^{t}$AOF timing parameters apply. Figure 85 (page 138) also shows the example where $^{t}$ANPD (MIN) is **not** satisfied because ODT HIGH does not occur until state T3. When $^{t}$ANPD (MIN) is **not** satisfied, $^{t}$AOFPD timing parameters apply.

ODT turn-on timing prior to entering any power-down mode is determined by the parameter $^{t}$ANPD, as shown in Figure 86 (page 139). At state T2, the ODT HIGH signal satisfies $^{t}$ANPD (MIN) prior to entering power-down mode at T5. When $^{t}$ANPD (MIN) is satisfied, $^{t}$AOND and $^{t}$AON timing parameters apply. Figure 86 (page 139) also shows the example where $^{t}$ANPD (MIN) is **not** satisfied because ODT HIGH does not occur until state T3. When $^{t}$ANPD (MIN) is **not** satisfied, $^{t}$AONPD timing parameters apply.

ODT turn-off timing after exiting any power-down mode is determined by the parameter $^{t}$AXPD (MIN), as shown in Figure 87 (page 140). At state Ta1, the ODT LOW signal satisfies $^{t}$AXPD (MIN) after exiting power-down mode at state T1. When $^{t}$AXPD (MIN) is satisfied, $^{t}$AOFD and $^{t}$AOF timing parameters apply. Figure 87 (page 140) also shows the example where $^{t}$AXPD (MIN) is **not** satisfied because ODT LOW occurs at state Ta0. When $^{t}$AXPD (MIN) is not satisfied, $^{t}$AOFPD timing parameters apply.

ODT turn-on timing after exiting either slow-exit power-down mode or precharge power-down mode is determined by the parameter $^{t}$AXPD (MIN), as shown in Figure 88 (page 141). At state Ta1, the ODT HIGH signal satisfies $^{t}$AXPD (MIN) after exiting power-down mode at state T1. When $^{t}$AXPD (MIN) is satisfied, $^{t}$AOND and $^{t}$AON timing parameters apply. Figure 88 (page 141) also shows the example where $^{t}$AXPD (MIN) is not satisfied because ODT HIGH occurs at state Ta0. When $^{t}$AXPD (MIN) is not satisfied, $^{t}$AONPD timing parameters apply.


Micron Technology, Inc. reserves the right to change products or specifications without notice.
© 2007 Micron Technology, Inc. All rights reserved.

**Figure 81: ODT Timing for Entering and Exiting Power-Down Mode**

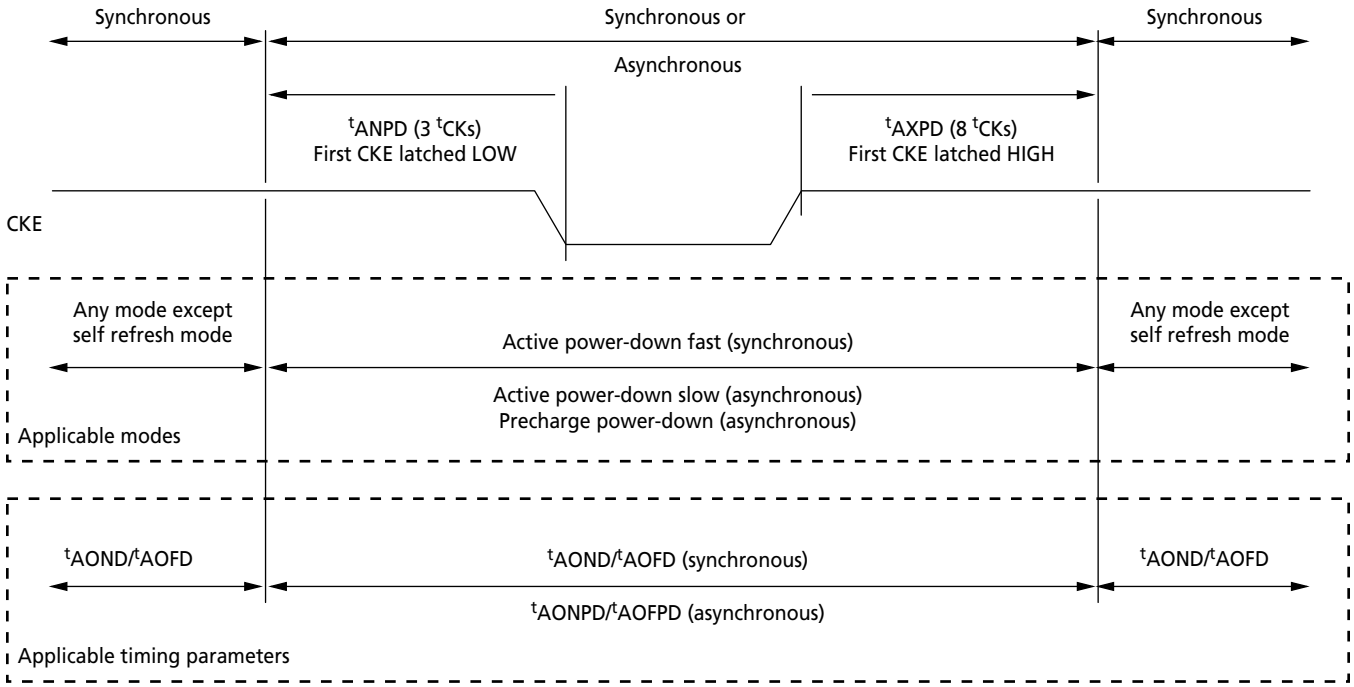



Micron Technology, Inc. reserves the right to change products or specifications without notice.
© 2007 Micron Technology, Inc. All rights reserved.

## MRS Command to ODT Update Delay

During normal operation, the value of the effective termination resistance can be changed with an EMRS set command. $^{t}$MOD (MAX) updates the $R_{TT}$ setting.

**Figure 82: Timing for MRS Command to ODT Update Delay**

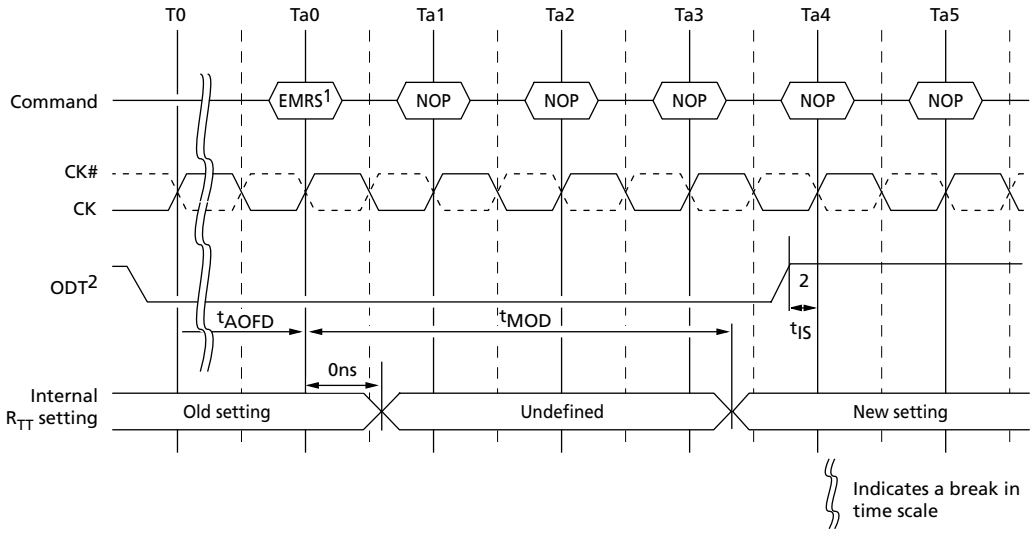


Notes:
1. The LM command is directed to the mode register, which updates the information in EMR (A6, A2), that is, $R_{TT}$ (nominal).
2. To prevent any impedance glitch on the channel, the following conditions must be met: $^{t}$AOFD must be met before issuing the LM command; ODT must remain LOW for the entire duration of the $^{t}$MOD window until $^{t}$MOD is met.


Micron Technology, Inc. reserves the right to change products or specifications without notice.
© 2007 Micron Technology, Inc. All rights reserved.

**Figure 83: ODT Timing for Active or Fast-Exit Power-Down Mode**

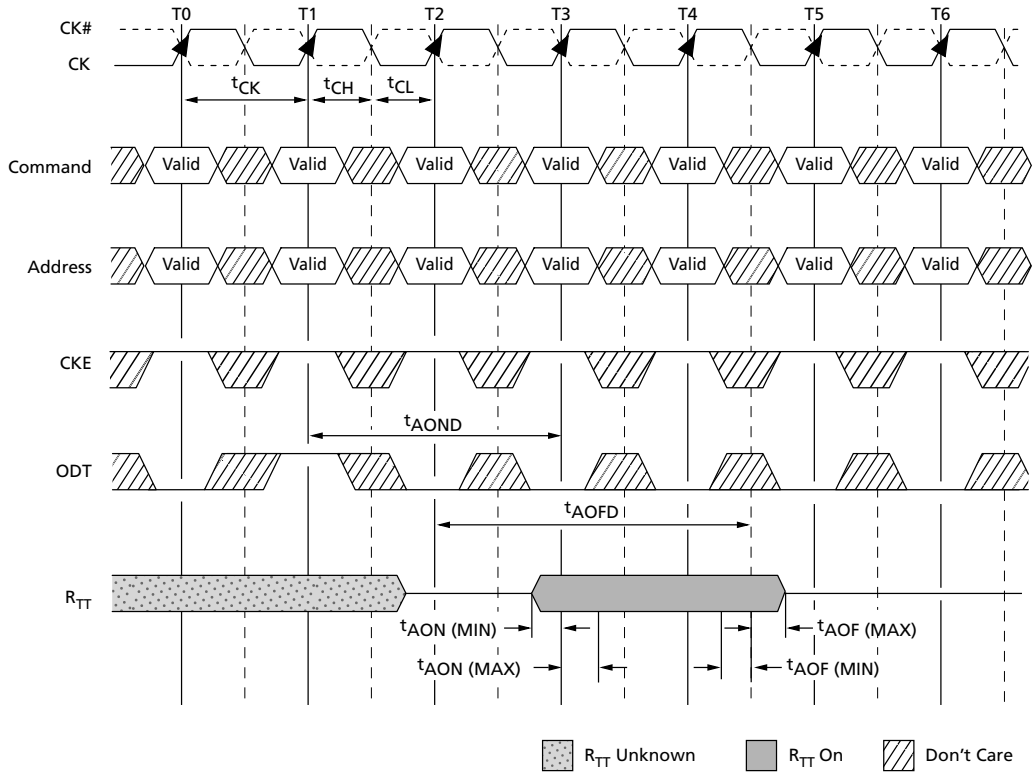


**Figure 84: ODT Timing for Slow-Exit or Precharge Power-Down Modes**

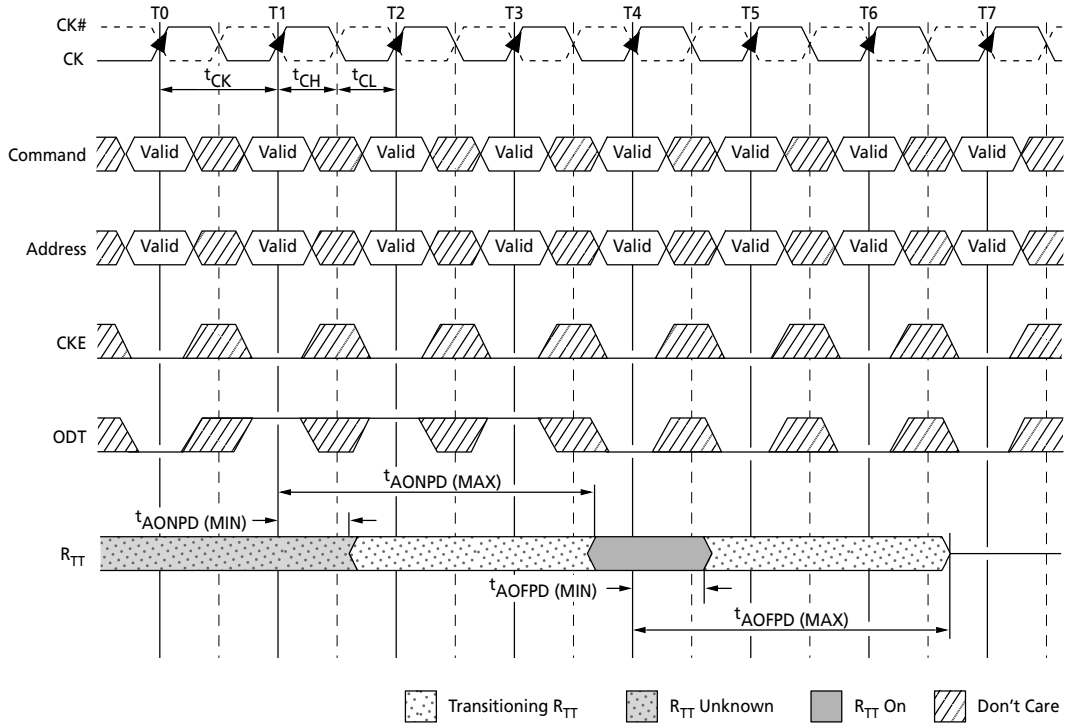



Micron Technology, Inc. reserves the right to change products or specifications without notice.
© 2007 Micron Technology, Inc. All rights reserved.

**Figure 85: ODT Turn-Off Timings When Entering Power-Down Mode**

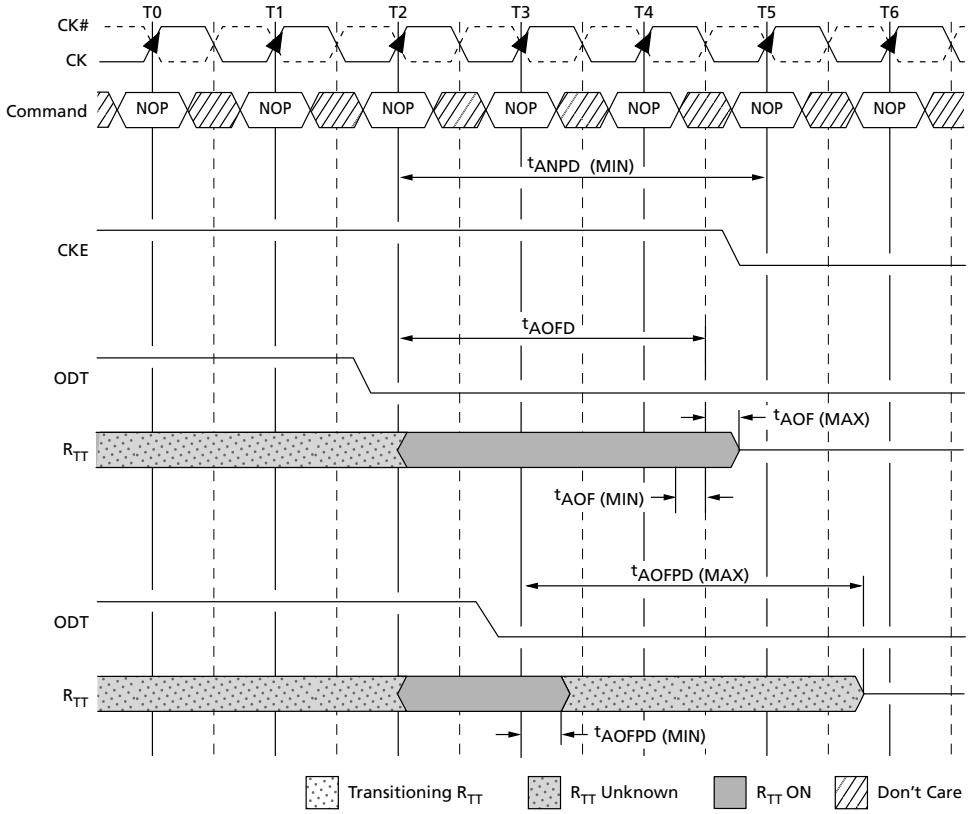



Micron Technology, Inc. reserves the right to change products or specifications without notice.
© 2007 Micron Technology, Inc. All rights reserved.

**Figure 86: ODT Turn-On Timing When Entering Power-Down Mode**

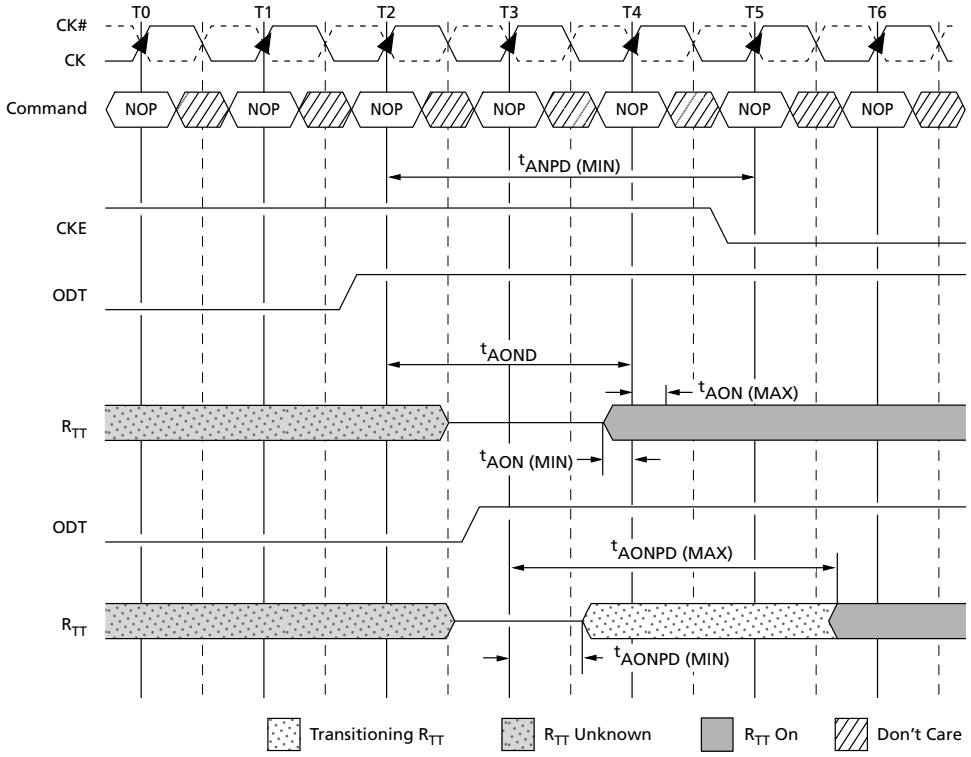



Micron Technology, Inc. reserves the right to change products or specifications without notice.
© 2007 Micron Technology, Inc. All rights reserved.

**Figure 87: ODT Turn-Off Timing When Exiting Power-Down Mode**

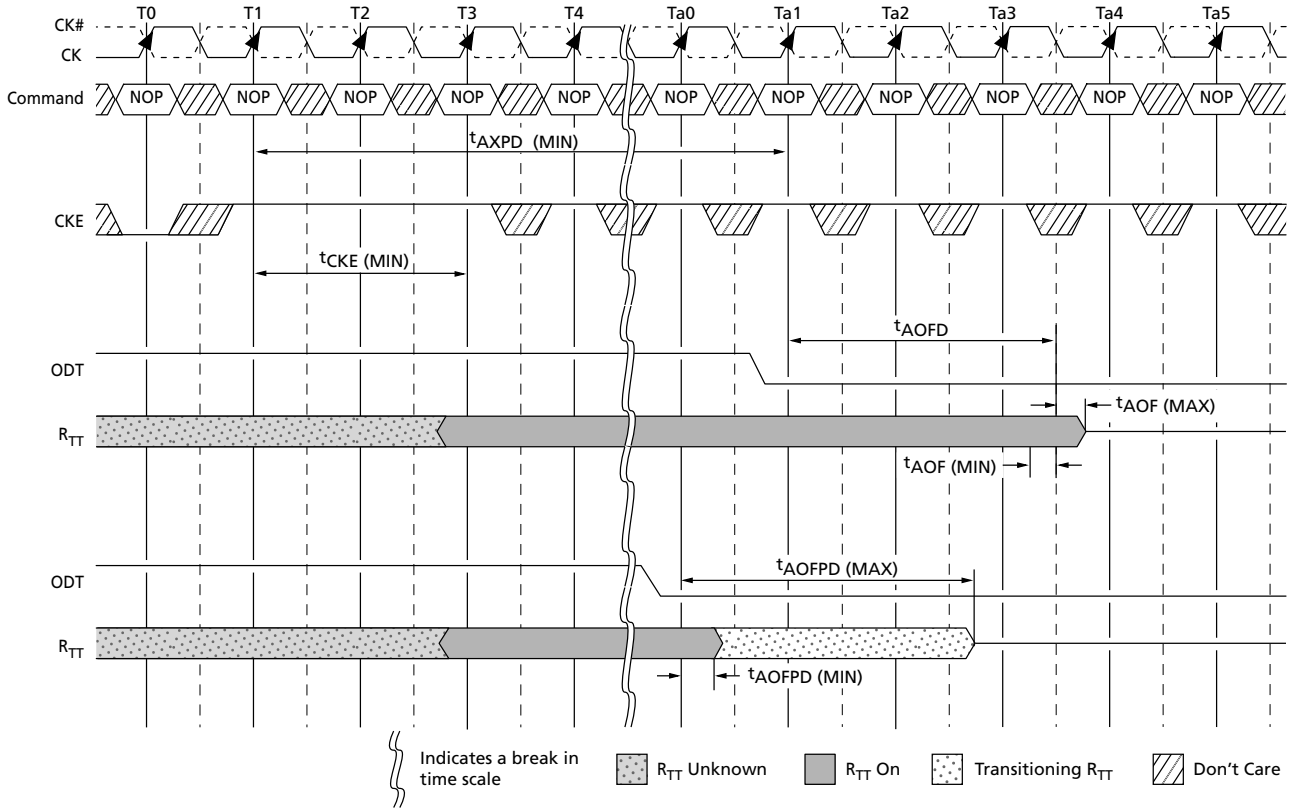



Micron Technology, Inc. reserves the right to change products or specifications without notice.
© 2007 Micron Technology, Inc. All rights reserved.

**Figure 88: ODT Turn-On Timing When Exiting Power-Down Mode**

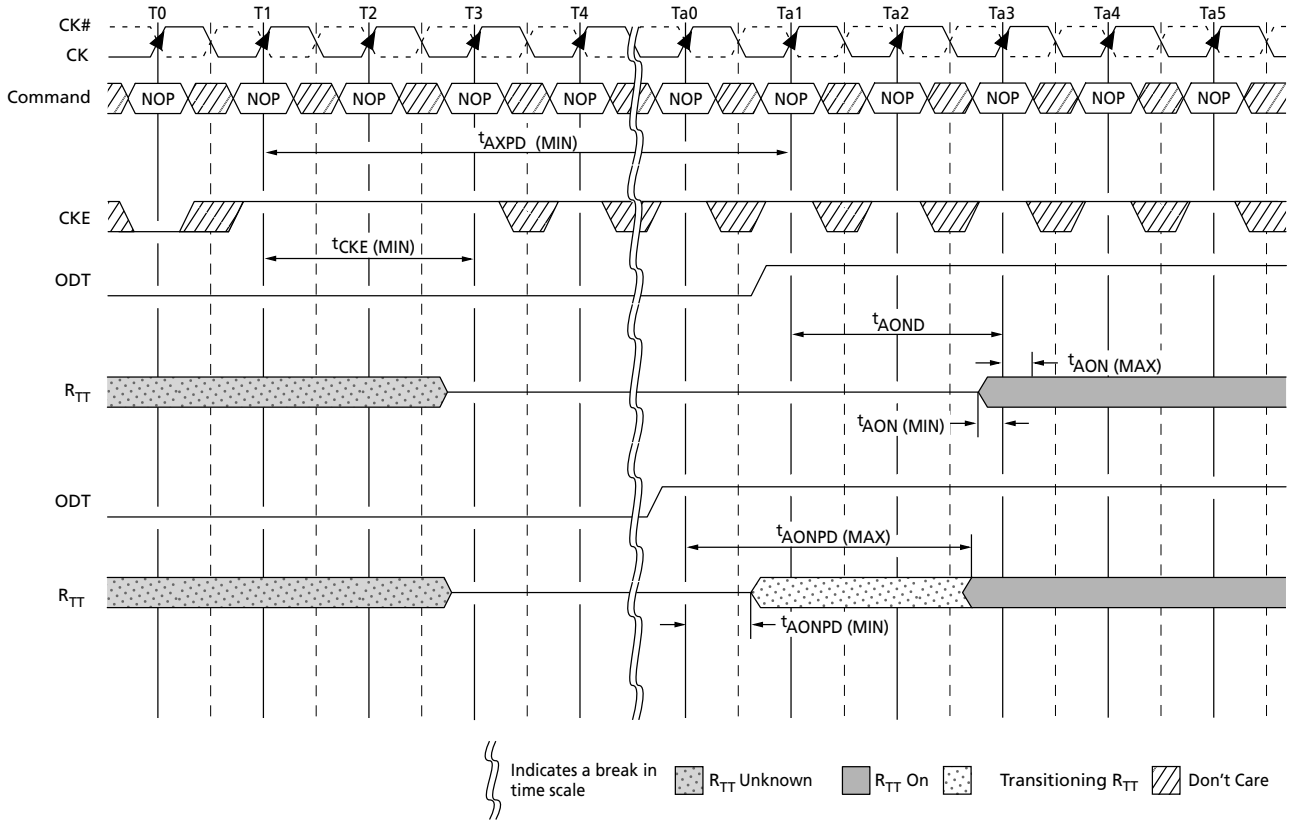


8000 S. Federal Way, P.O. Box 6, Boise, ID 83707-0006, Tel: 208-368-4000
www.micron.com/products/support Sales inquiries: 800-932-4992
Micron and the Micron logo are trademarks of Micron Technology, Inc.
All other trademarks are the property of their respective owners.
This data sheet contains minimum and maximum limits specified over the power supply and temperature range set forth herein. Although considered final, these specifications are subject to change, as further product development and data characterization sometimes occur.


Micron Technology, Inc. reserves the right to change products or specifications without notice.
© 2007 Micron Technology, Inc. All rights reserved.