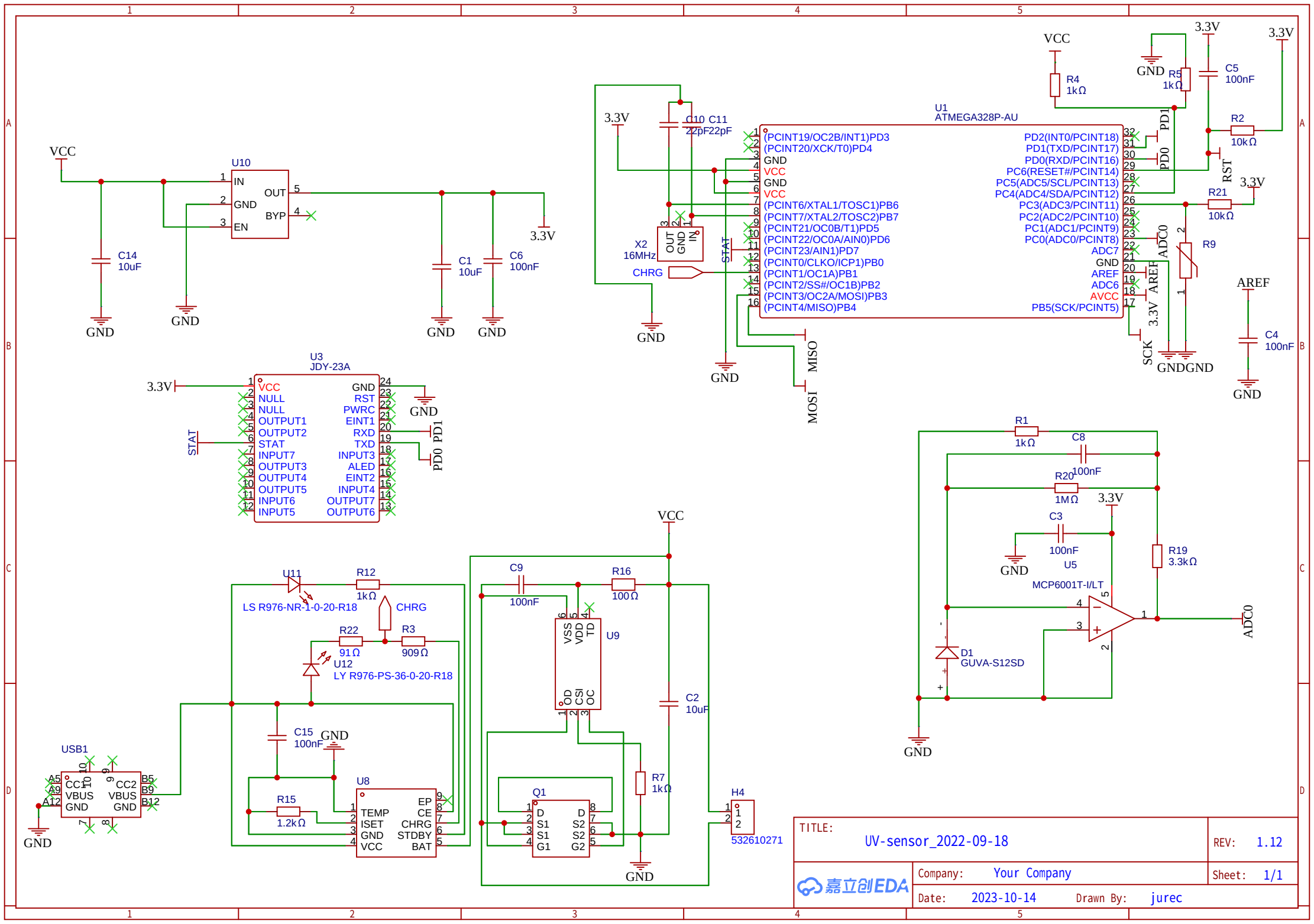
U10
IN
GND
EN
OUT
BYP
VCC
3.3V
C14
10uF
C1
10uF
C6
100nF
U1
ATMEGA328P-AU
(PCINT19/OC2B/INT1)PD3
(PCINT20/XCK/T0)PD4
GND
VCC
(PCINT6/XTAL1/TOSC1)PB6
(PCINT7/XTAL2/TOSC2)PB7
(PCINT21/OC0B/T1)PD5
(PCINT22/OC0A/AIN0)PD6
(PCINT23/AIN1)PD7
(PCINT0/CLKO/ICP1)PB0
(PCINT1/OC1A)PB1
(PCINT2/SS#/OC1B)PB2
(PCINT3/OC2A/MOSI)PB3
(PCINT4/MISO)PB4
PD2(INT0/PCINT18)
PD1(TXD/PCINT17)
PD0(RXD/PCINT16)
PC6(RESET#/PCINT14)
PC5(ADC5/SCL/PCINT13)
PC4(ADC4/SDA/PCINT12)
PC3(ADC3/PCINT11)
PC2(ADC2/PCINT10)
PC1(ADC1/PCINT9)
PC0(ADC0/PCINT8)
ADC7
AREF
ADC6
AVCC
PB5(SCK/PCINT5)
C10 C11
22pF22pF
X2
16MHz
OUT GND IN
CHRG
STAT
MISO
MOSI
SCK
R4
1kΩ
R5
1kΩ
C5
100nF
R2
10kΩ
R21
10kΩ
R9
PD1
PD0
RST
ADC0
AREF
C4
100nF
U3
JDY-23A
VCC
NULL
NULL
OUTPUT1
OUTPUT2
STAT
INPUT7
OUTPUT3
OUTPUT4
OUTPUT5
INPUT6
INPUT5
GND
RST
PWRC
EINT1
RXD
TXD
INPUT3
ALED
EINT2
INPUT4
OUTPUT7
OUTPUT6
PD1
PD0
R1
1kΩ
C8
100nF
R20
1MΩ
C3
100nF
U5
MCP6001T-I/LT
R19
3.3kΩ
D1
GUVA-S12SD
ADC0
U11
LS R976-NR-1-0-20-R18
R12
1kΩ
CHRG
R22
91Ω
R3
909Ω
U12
LY R976-PS-36-0-20-R18
C15
100nF
U8
TEMP
ISET
GND
VCC
EP
CE
CHRG
STDBY
BAT
R15
1.2kΩ
USB1
CC1
VBUS
GND
CC2
VBUS
GND
C9
100nF
R16
100Ω
U9
VSS
VDD
TD
OD
CSI
OC
C2
10uF
R7
1kΩ
Q1
D
S1
S1
G1
D
S2
S2
G2
H4
532610271
TITLE:
UV-sensor_2022-09-18
REV: 1.12
Company: Your Company
Sheet: 1/1
Date: 2023-10-14
Drawn By: jurec
嘉立创EDA