TensorFlash

Democratizing AI Infrastructure

Cost of AI data centers grows faster than LLM models

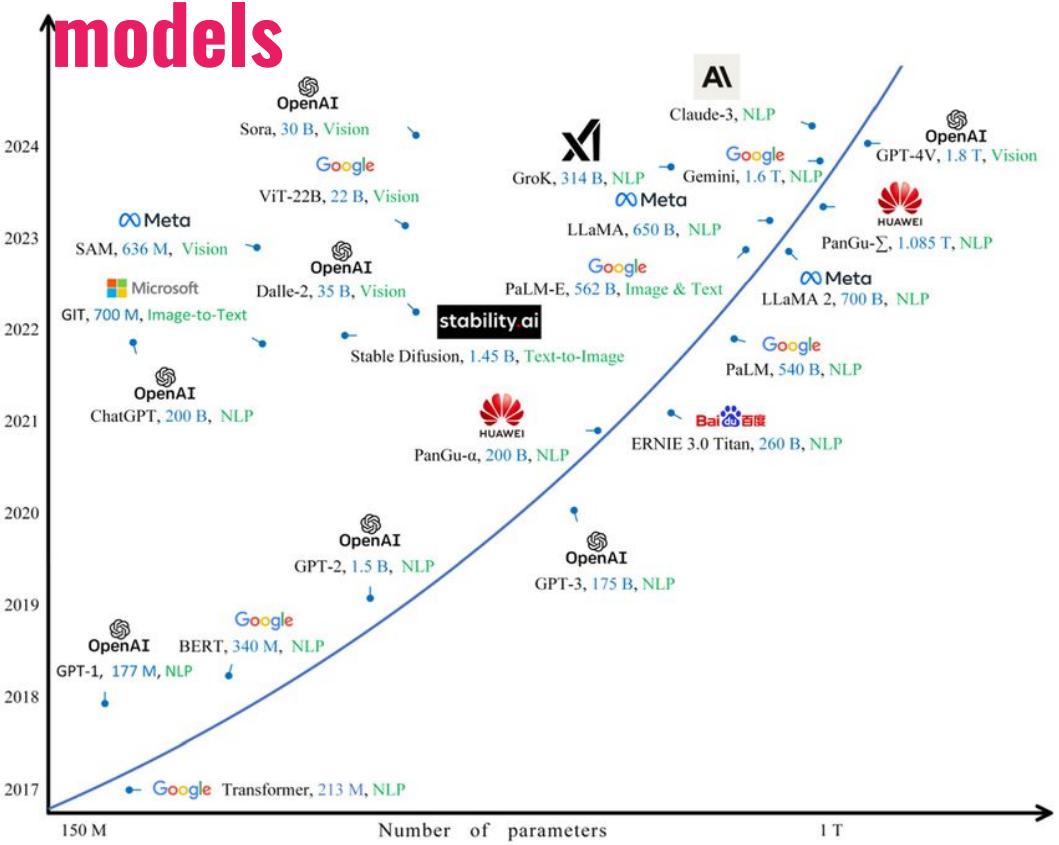

Source: https://www.researchgate.net/

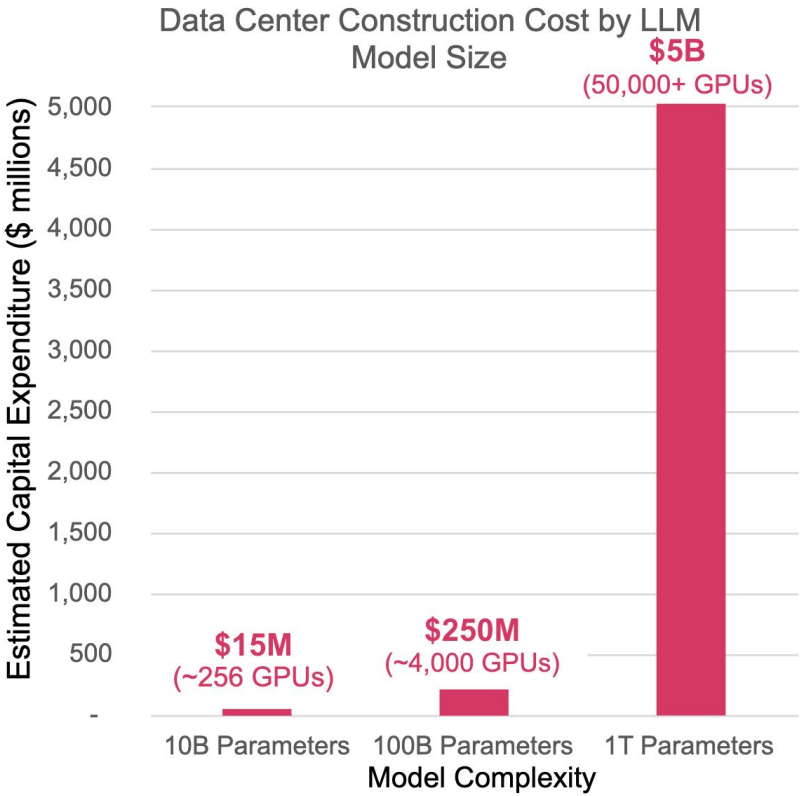

The Need to Democratize AI Data Centers

	Public AI	Private AI
Data Privacy	Shared environment; risk of data leakage.	Air-gapped security; zero external exposure.
IP Protection	IP may inadvertently "train" a competitor's model.	100% ownership of model weights and logic.
Cost Profile	Variable OpEx; high scaling "tax" at volume.	Fixed CapEx; lower TCO for high-utilization.
Customization	General-purpose; limited hardware tuning.	Bespoke architecture for specific domain tasks.
Governance	Subject to vendor Terms of Service (ToS).	Full control over compliance and ethics.

Despite the necessity of private AI, >99.9% of companies **cannot** afford owning proprietary AI data centers, limiting AI's proliferation in enterprise applications.

AI Data Center Cost Breakdown

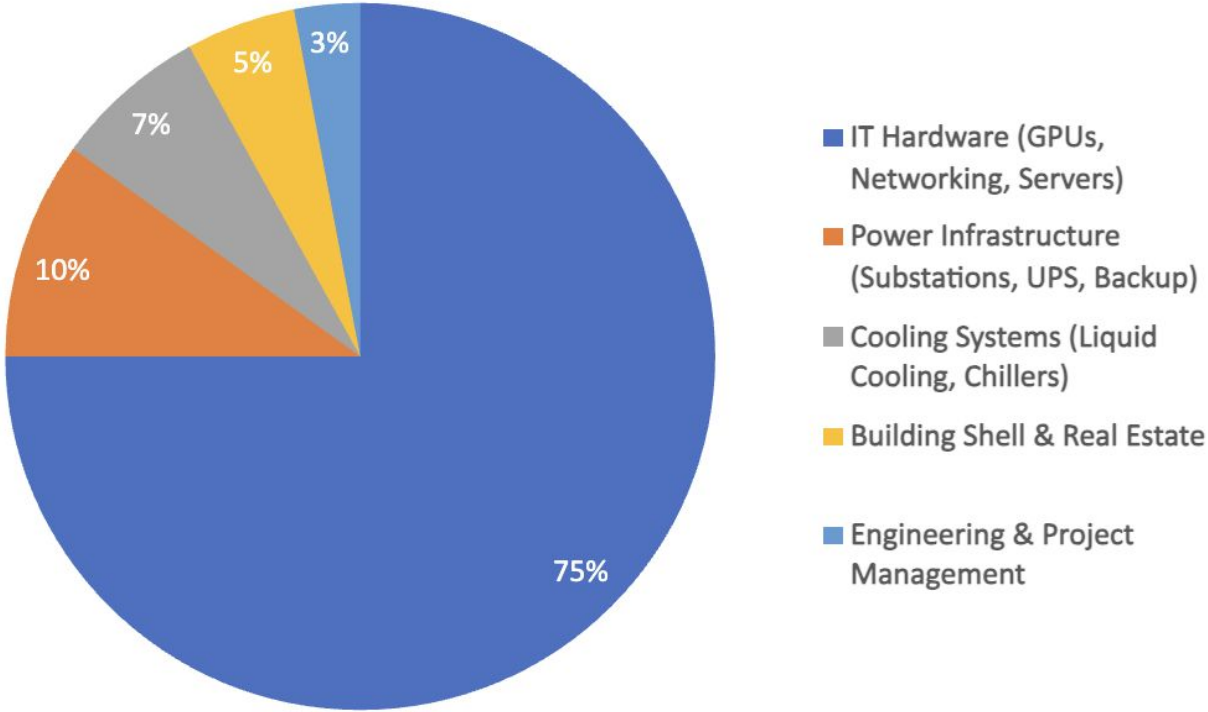

All cost factors are based on **the number of GPUs** provisioned.

TensorFlash Innovation: Extending PCIE for Server Interconnect

GPU pooling
DIstributed AI training
HPC computing

NVME SSD pooling
High performance storage

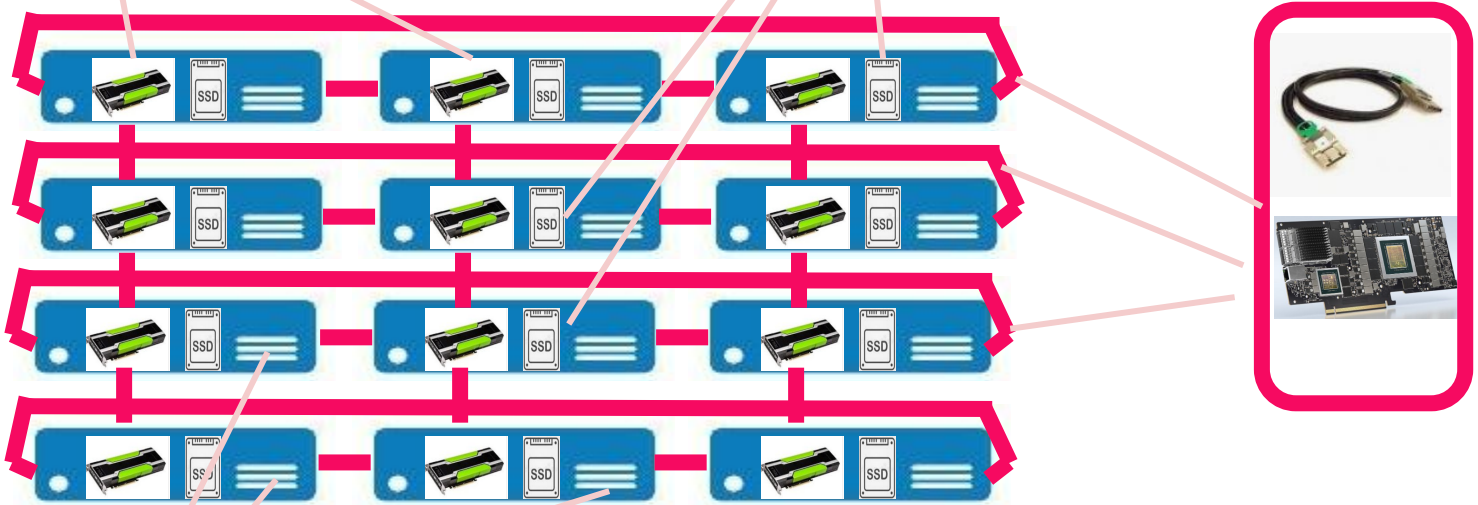

Memory pooling
Big Data
VR/AR/Rendering

Lattice Fabric: Flexible composition, High performance, High utilization

Drastic Reduction in GPU-SSD Data Latency

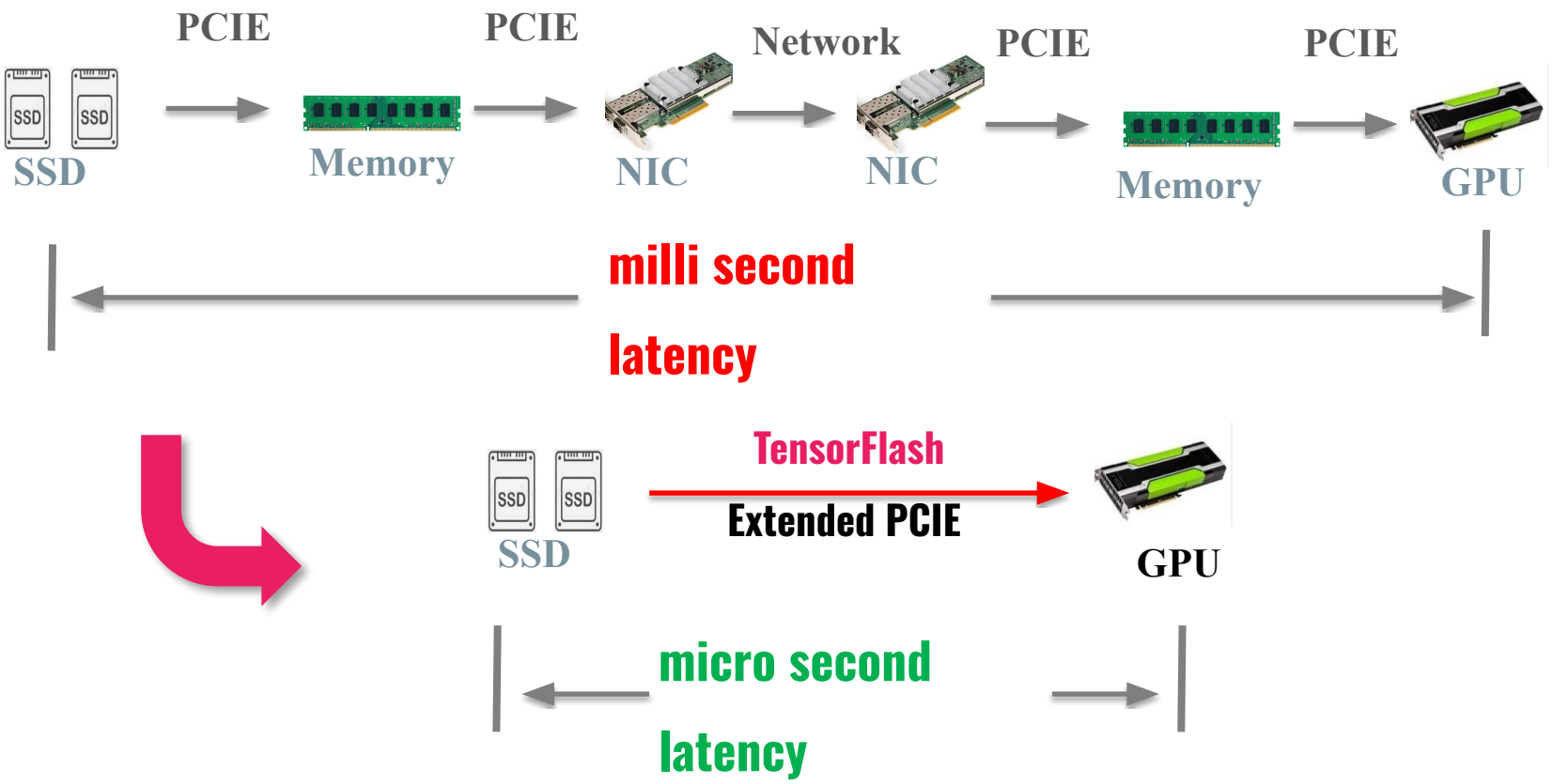

Tightly Coupled GPU/SSD KV Cache for LLM

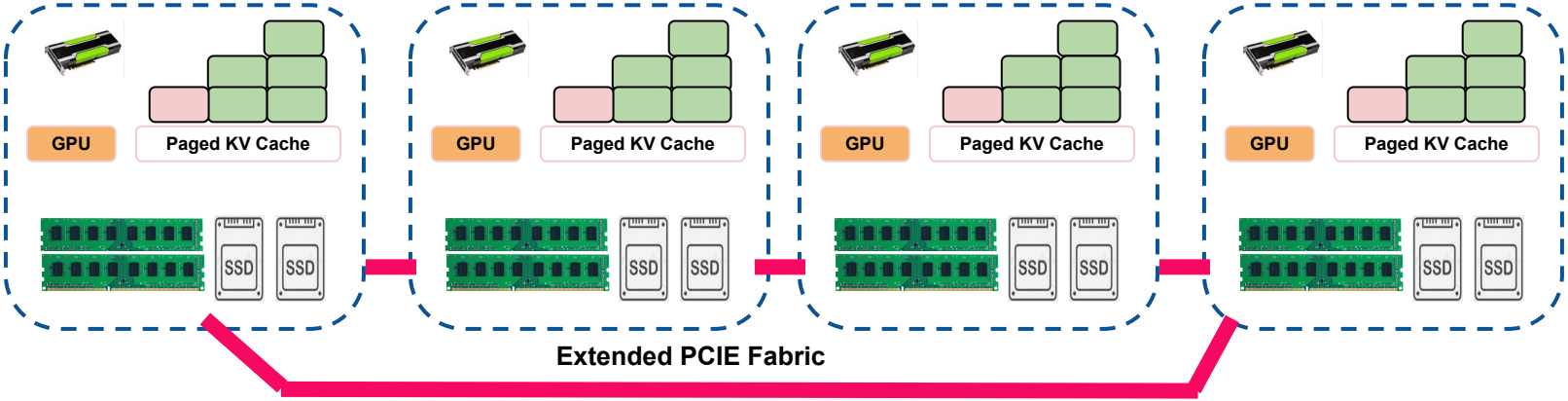

- Extended PCIE fabric provides pooling for memory and SSD
- Data movement all in hardware, minimal driver/FW involvement
- Drastic improvement in bandwidth and latency compared with traditional RDMA

The Revolutionary TFNative™ Technology

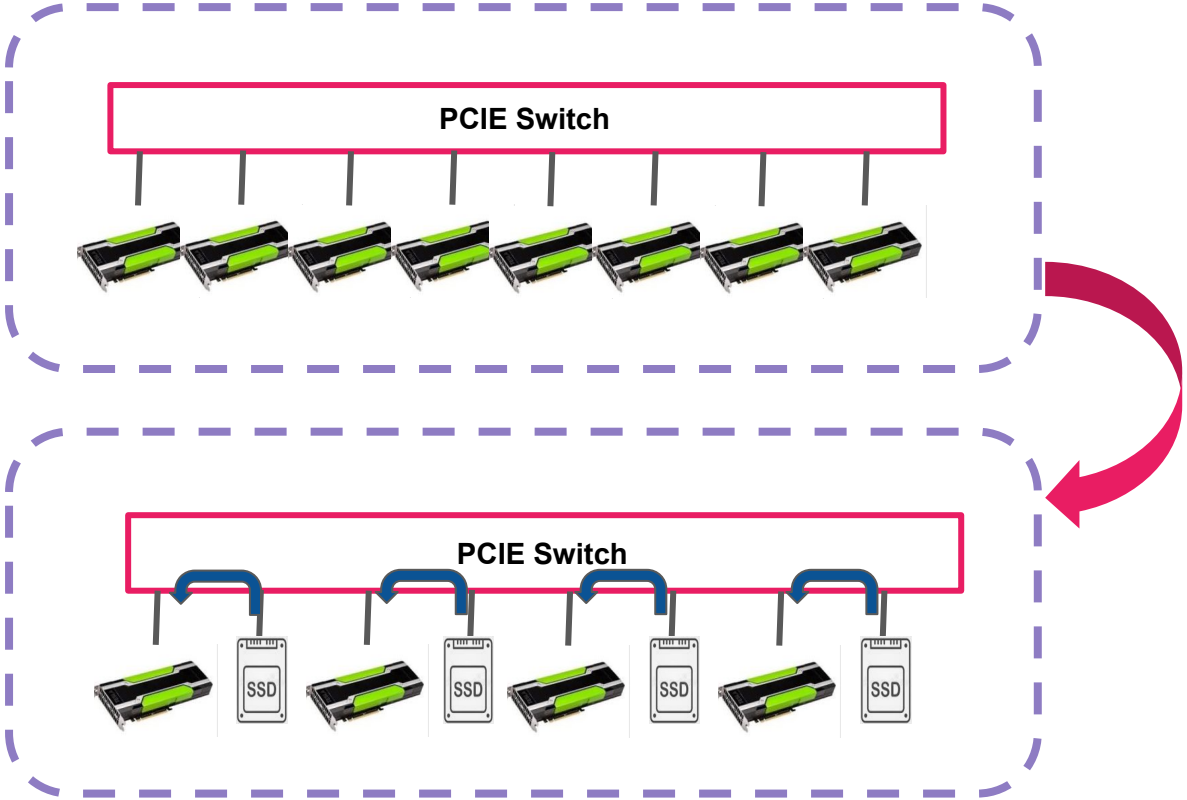

- Each GPU paired with SSD
- GPUs have dedicated computing scratch pad
- SSD hold all model parameters, gradients, optimizer states
- GPU exchange data through neighboring SSD

GPU Server Ring Extension

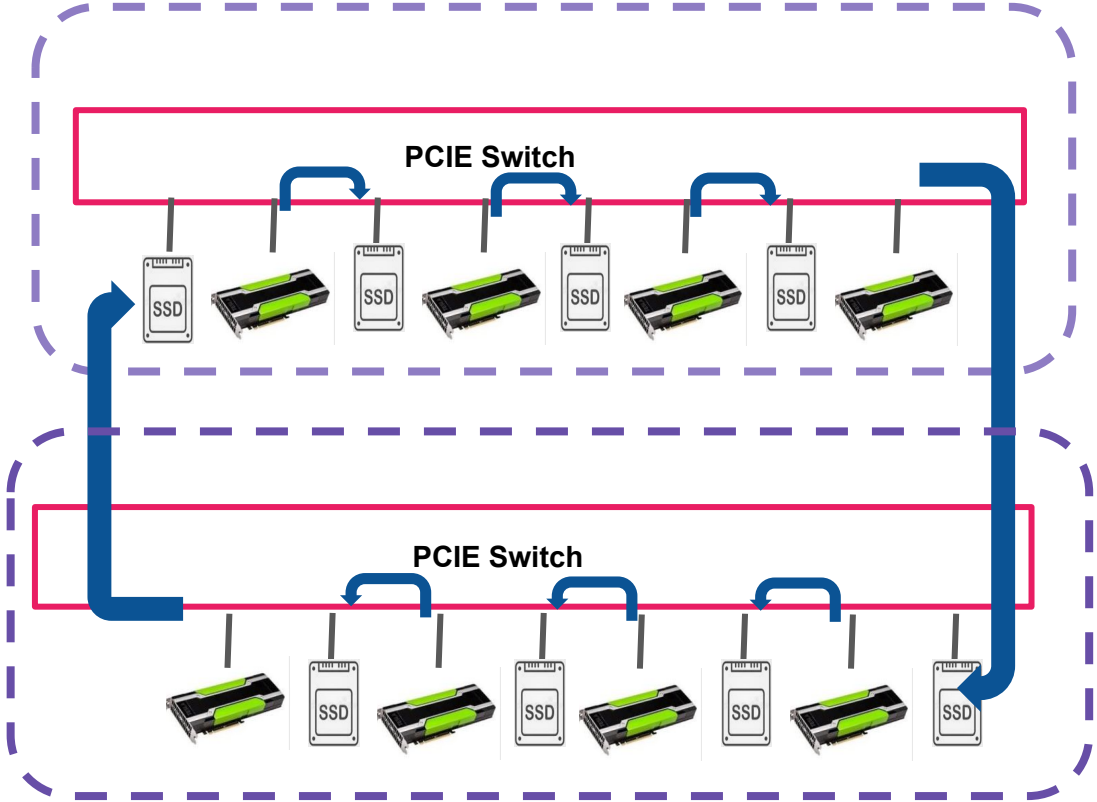

- Commodity GPU, less HBM dependency
- No NVLink dependency
- Better parallelism All/All Ring reduce
- Train largest LLM with **64X** fewer GPUs

Comparable Performance with Far Fewer GPUs

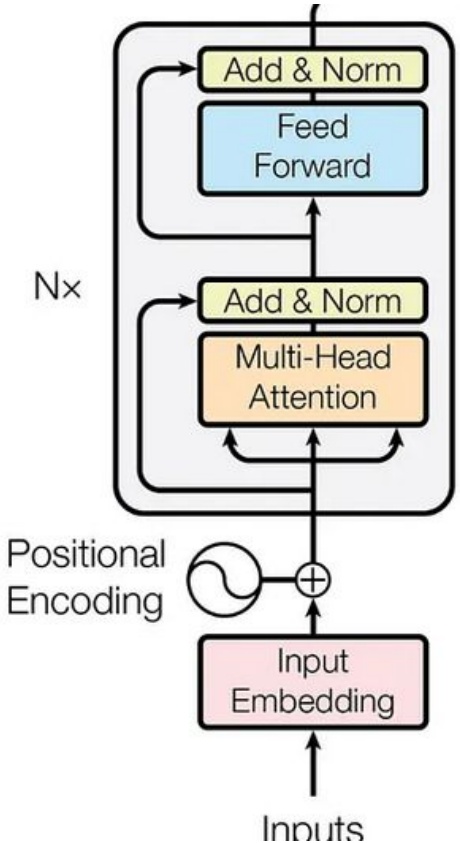

Case Study of Streaming Computing during LLM Inference

- GPT-3 175B, 96 layer
- Each layer ~1.8B, 3.6G Bytes
- Gen6x16 SSD bandwidth ~ 100GB/s
- Model loading time for one layer: 3.6/100 ~ 35ms
- Computing: 100K x 1.8B / 1000 T ~ 180ms

Diffusion Transformer (DiT) - Video Generation

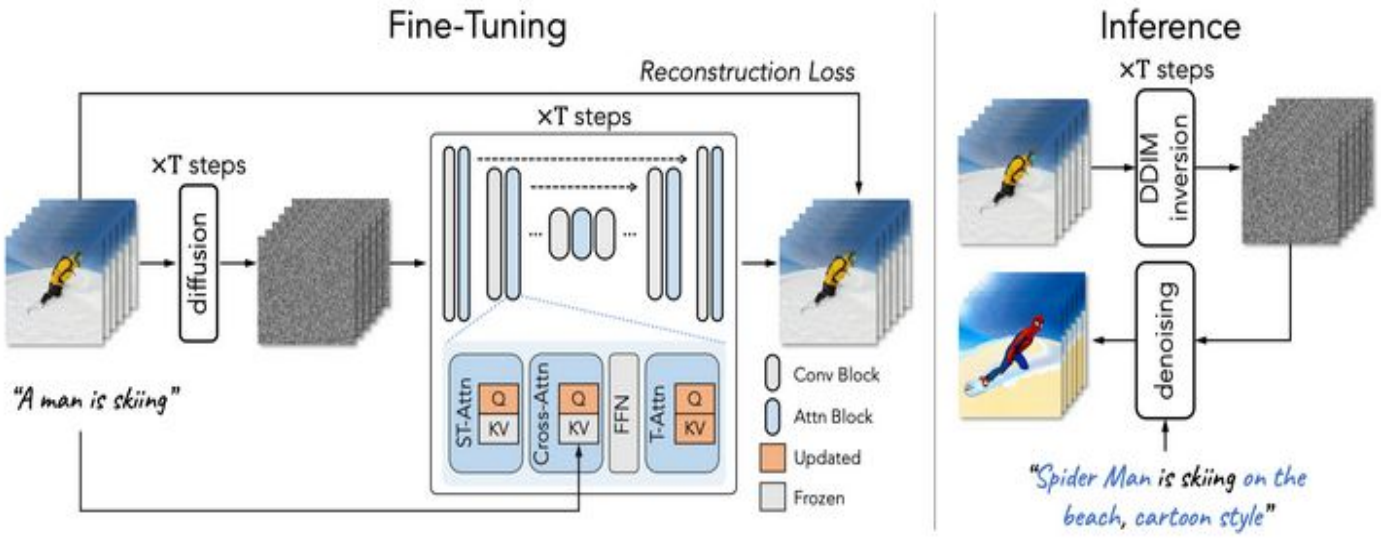

- Both Inverse and Denoise processes have long computing to overlap with IO loading
- High definition video generation requires large HBM in current approach
- TensorFlash provides high quality video generation solution with cost efficient GPU clusters

TensorFlash Computing/Price Ratio vs Competitors

GPU	AMD 9700 Intel Arc B79	沐曦	Nvidia H200
Computing Power	190 Tflops	300 Tflops	990 Tflops
Price	10,000 ¥	~55,000 ¥	~210,000 ¥
		1.5x Tflops 5.5x Price	4x Tflops 20x Price

Large-scale Training with Low-cost GPU or Alternative

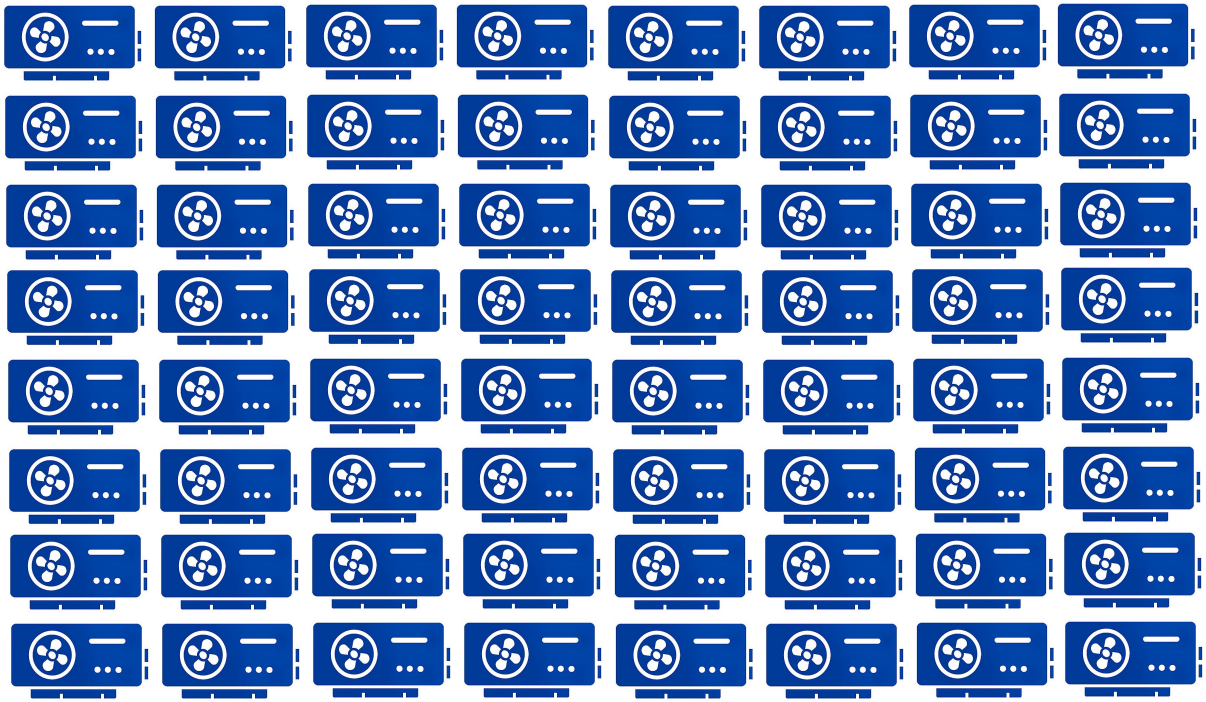

- Nvidia 5090 ~ $2K
- 256 5090 ~$500K
- Aggregated ~ 50 Pflops
- Train any of the largest LLM
- Multi-Agent Reinforcement Learning

Seamless Integration with All Major Platforms

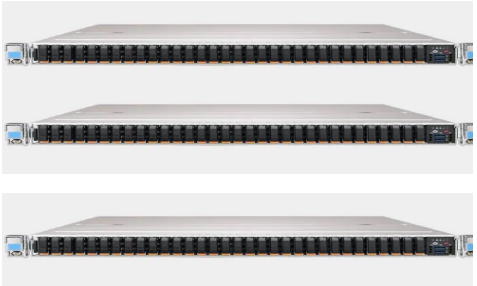

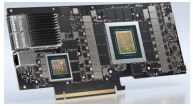

- Extended PCIE fabric turns any server platform into high performance cluster
- All Flash Array built from standard off-the-shelf components
- Converged and native SSD performance across cluster

Evolution of Computing Infrastructure

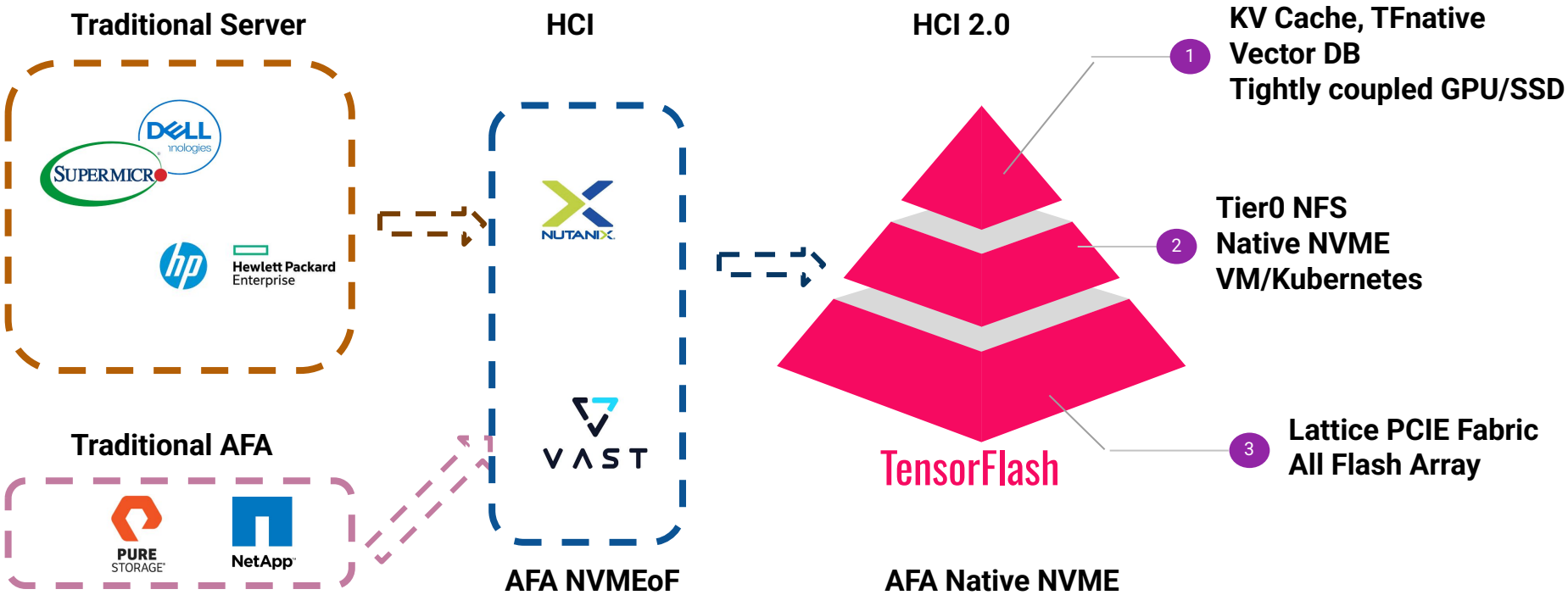

Addressable Markets

	All Flash Array	HCI	AI & Data Analytics
Market Size	~ 25B	~ 15B	Billions
Major Player	PURE STORAGE, NetApp, VAST	NUTANIX, VMware vSAN™	Many Players
TensorFlash Advantage	- Off-the-Shelf components - Utilizing server from any vendor - High performance and low CPU utilization	- Native local NVME performance - Power efficient - Revolutionary all flash solution for Kubernetes	- Converged SSD/Memory Caching - Native NVME throughput for KV cach - Boosting data analytics with native flash storage

Founding Team

- **Wei Zhou**, worked in Storage industry for over 20 years, have held senior management position at Marvell and SK hynix, leading teams in storage HW/FW/system engineering. Master degree of Applied Physics from Stanford

- **David Chen**, former Vice President and Head of SSD Business at Marvell, founding President of InnoGrit, founding Partner of El Camino Capital. PhD in Electrical Engineering from UC Berkeley

- **K. Wong**, worked in various fields in storage, have broad experience in SSD FW engineering and linux kernel engineering, have held principle engineer positions at Marvell and Sk Hynix

- **X. Hu**, 20-plus years' experience in storage industry, strong kernel and OS engineering expertise, have held various engineering and management positions at Marvell and startups