Onju Home

@justLV

CC BY-NC 4.0
Creative Commons Attribution-NonCommercial 4.0 International License
https://creativecommons.org/licenses/by-nc/4.0/

V3
8/5/2023

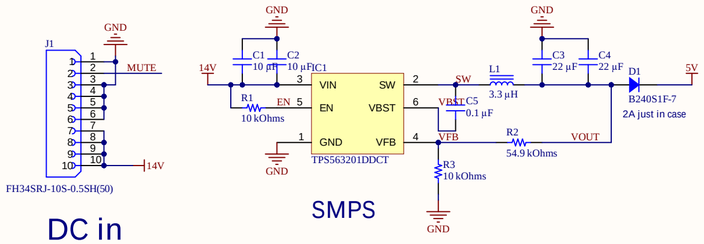

DC in

SMPS

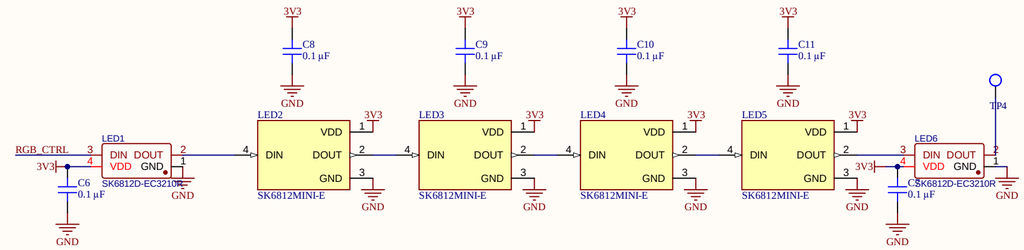

LED's

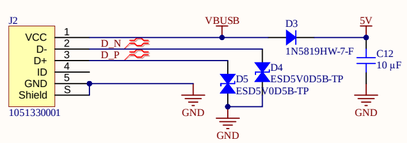

USB

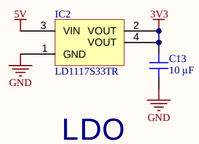

LDO

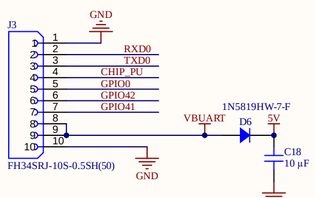

Debug header

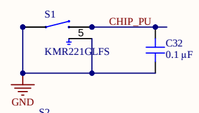

Reset

Boot

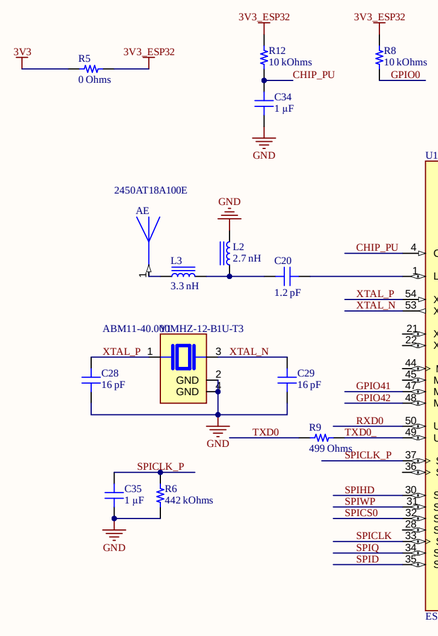

ESP32-S3

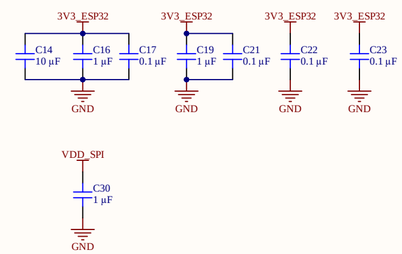

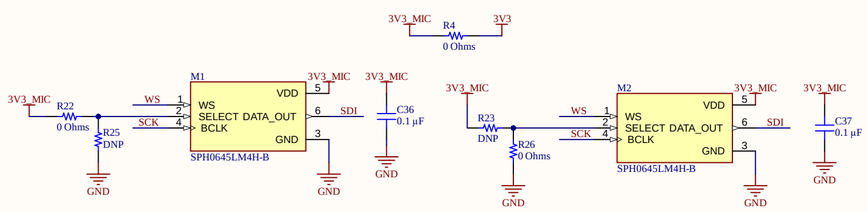

Microphones

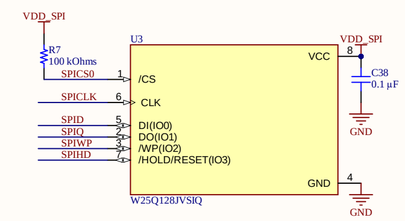

QSPI NOR Flash

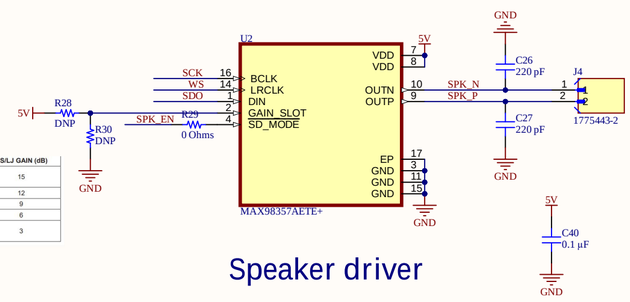

GAIN_SLOT	I²S/LJ GAIN (dB)
Connect to GND through 100kΩ ±5% resistor	15
Connect to GND	12
Unconnected	9
Connect to V_{DD}	6
Connect to V_{DD} through 100kΩ ±5% resistor	3

Speaker driver