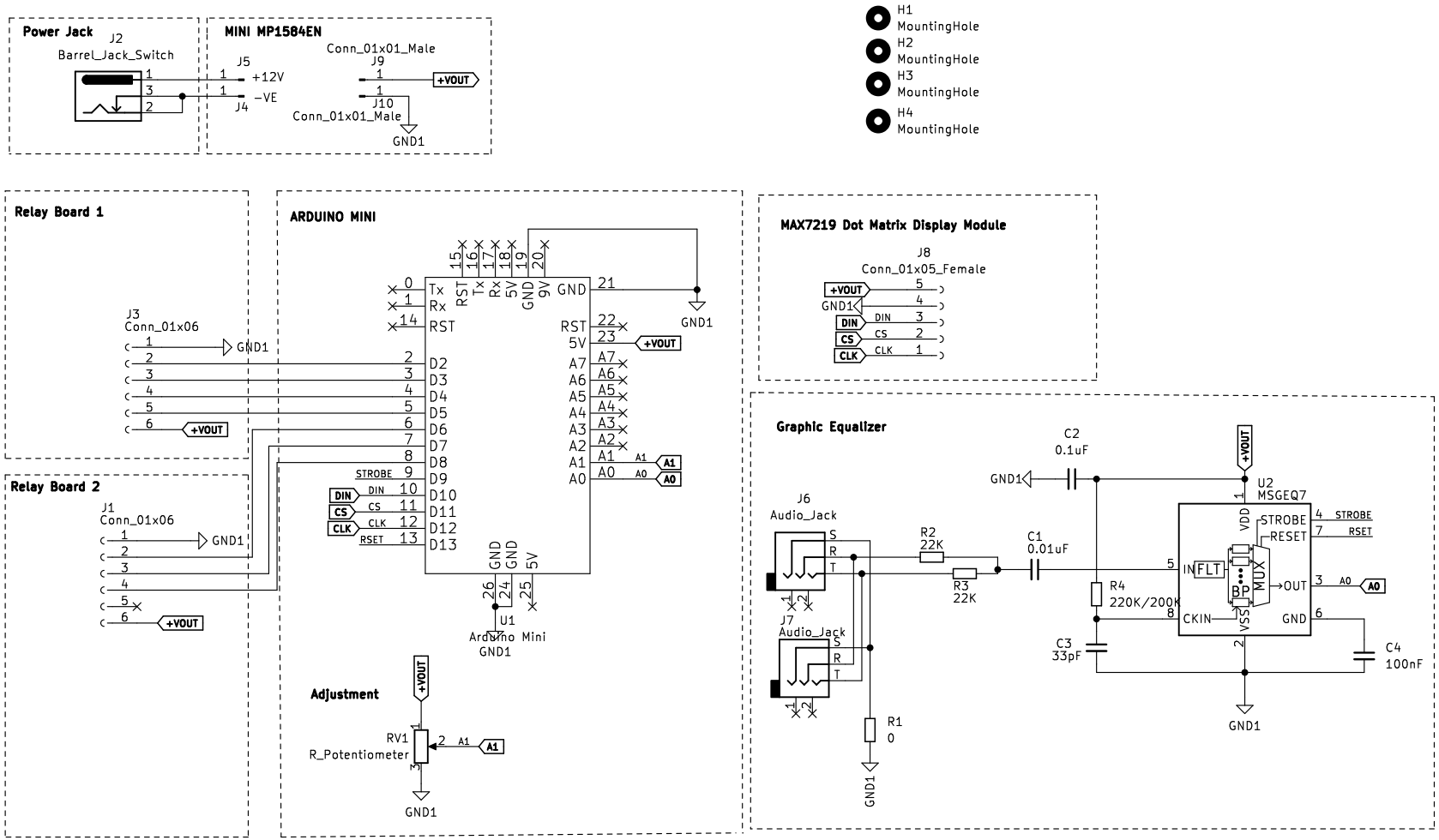

Just Barran Youtube

Sheet: /

File: Arduino_Mini.kicad_sch

Title: DIY Automatic Musical Christmas Light Show

Size: A4	Date:	**Rev: v1.0**
KiCad E.D.A. kicad (6.0.0-rc1-124-g18b4ebcc17)		Id: 1/1