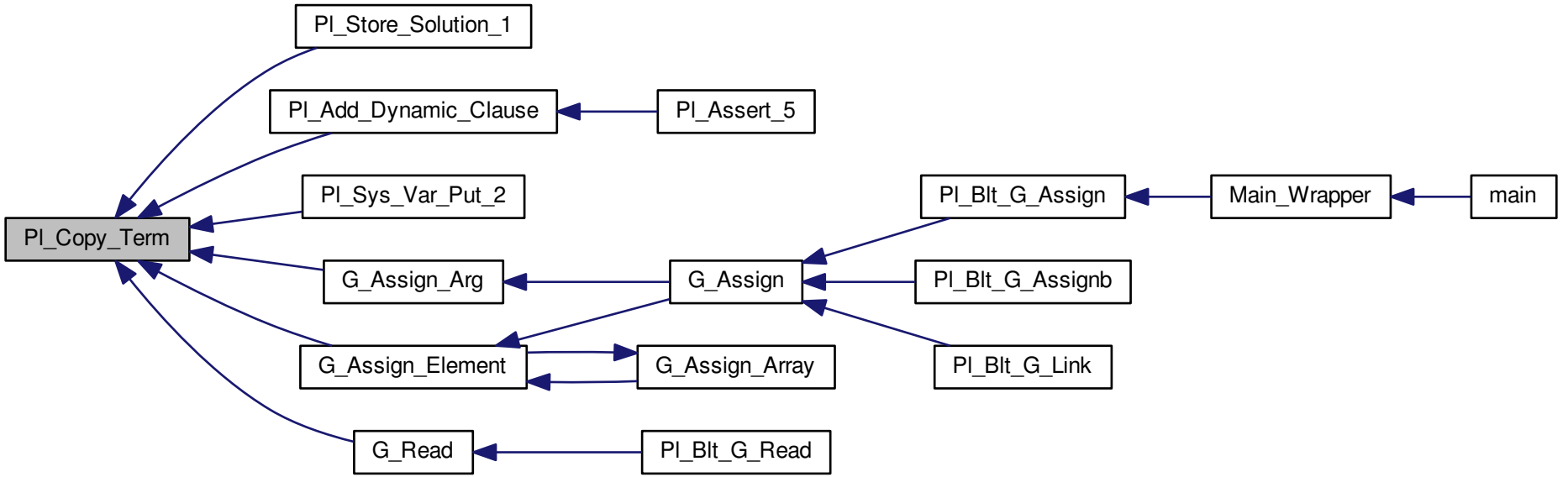
Pl_Store_Solution_1
Pl_Add_Dynamic_Clause
Pl_Assert_5
Pl_Sys_Var_Put_2
Pl_Copy_Term
Pl_Blt_G_Assign
Main_Wrapper
main
G_Assign_Arg
G_Assign
Pl_Blt_G_Assignb
G_Assign_Element
G_Assign_Array
Pl_Blt_G_Link
G_Read
Pl_Blt_G_Read