v1.0.11

Daisy Seed2 DFM

Embedded DSP Platform For Industrial Applications

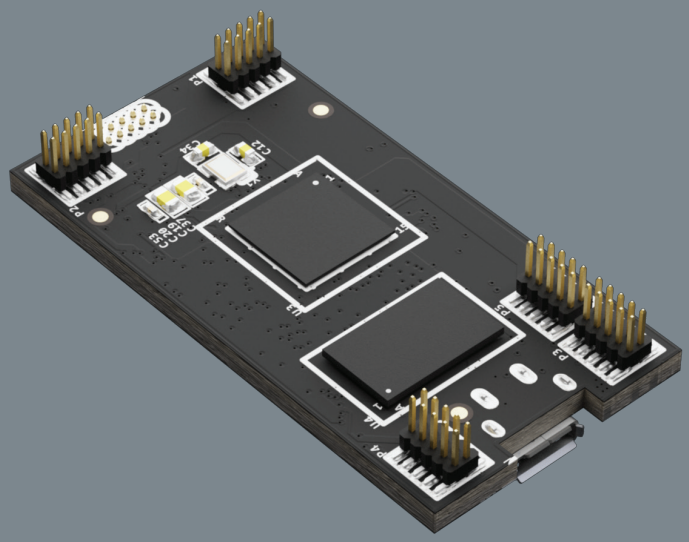

Features:

- Embedded platform for audio applications
- 96kHz / 24-bit audio hardware
- 64MB of SDRAM for up to 10 minute long audio buffers
- ARM Cortex-M7 MCU, running at 480MHz
- 33 total GPIO pins with configurable functionality
- 12-bit Digital to Analog Converters (x2)
- SD card interfaces
- PWM outputs
- Serial Protocols for connecting external sensors and devices (SPI, UART, I2s, I2C)
- Dedicated VIN pin for power
- Micro USB port, and additional USB pins for full OTG-support as host and device

Applications:

- Electronic Instruments (Eurorack modules, synthesizers, samplers, drum machines)
- Effects Units (Desktop Effects, Effects Pedals)
- Audio Playback (Sound Installations, Audio Feedback Devices)

Description:

Daisy is an embedded platform for music. It features everything you need for creating high fidelity audio hardware devices. Just plug in a USB cable and start making sound!

Programming the Daisy is a breeze with support for a number of languages including C++, Arduino, and Max/MSP Gen~. To get started, simply upload an example program over USB, and start tweaking!

Documentation, and examples are hosted on our Github repository for easy download. All firmware that we develop is released for free under a permissive open source license (MIT).

Colophon

Copyright (c) 2021 Electrosmith

Permission is hereby granted, free of charge, to any person obtaining a copy of this software and associated documentation files (the "Software"), to deal in the Software without restriction, including without limitation the rights to use, copy, modify, merge, publish, distribute, sublicense, and/or sell copies of the Software, and to permit persons to whom the Software is furnished to do so, subject to the following conditions:

The above copyright notice and this permission notice shall be included in all copies or substantial portions of the Software.

THE SOFTWARE IS PROVIDED "AS IS", WITHOUT WARRANTY OF ANY KIND, EXPRESS OR IMPLIED, INCLUDING BUT NOT LIMITED TO THE WARRANTIES OF MERCHANTABILITY, FITNESS FOR A PARTICULAR PURPOSE AND NONINFRINGEMENT. IN NO EVENT SHALL THE AUTHORS OR COPYRIGHT HOLDERS BE LIABLE FOR ANY CLAIM, DAMAGES OR OTHER LIABILITY, WHETHER IN AN ACTION OF CONTRACT, TORT OR OTHERWISE, ARISING FROM, OUT OF OR IN CONNECTION WITH THE SOFTWARE OR THE USE OR OTHER DEALINGS IN THE SOFTWARE.

Table of Contents

Pinout 1

Pinout Tables

- Absolute Maximum Ratings [Table 1] 2
- Pin Functions [Table 2] 3
- Electrical Characteristics [Table 3] 5

Performance

- Noise Floor 7
- SNR : 1kHz Reference Sine Wave 7

Typical Applications

- 1.0 Power 8
- 1.1 Line Level Input 8
- 1.2 Line Level Output 8
- 1.3 Eurorack Audio Input 9
- 1.4 Eurorack Audio Output DC Coupled 9
- 1.5 Eurorack Audio Output AC Coupled 9
- 1.6 Guitar Level Input 10
- 1.7 Guitar Level Output 10
- 1.8 Expression Input 10
- 1.9 Potentiometers 11
- 1.10 Toggle Switch 11
- 1.11 Tactile Switch 11
- 1.12 Micro SD 12
- 1.13 LED 12

Technical Drawing 13

Landing Pattern 14

The Fine Print (Certifications/Compliances) 15

Changelog 16

Pinout

Red boxes in illustration indicate Pin 1 for their respective bank.

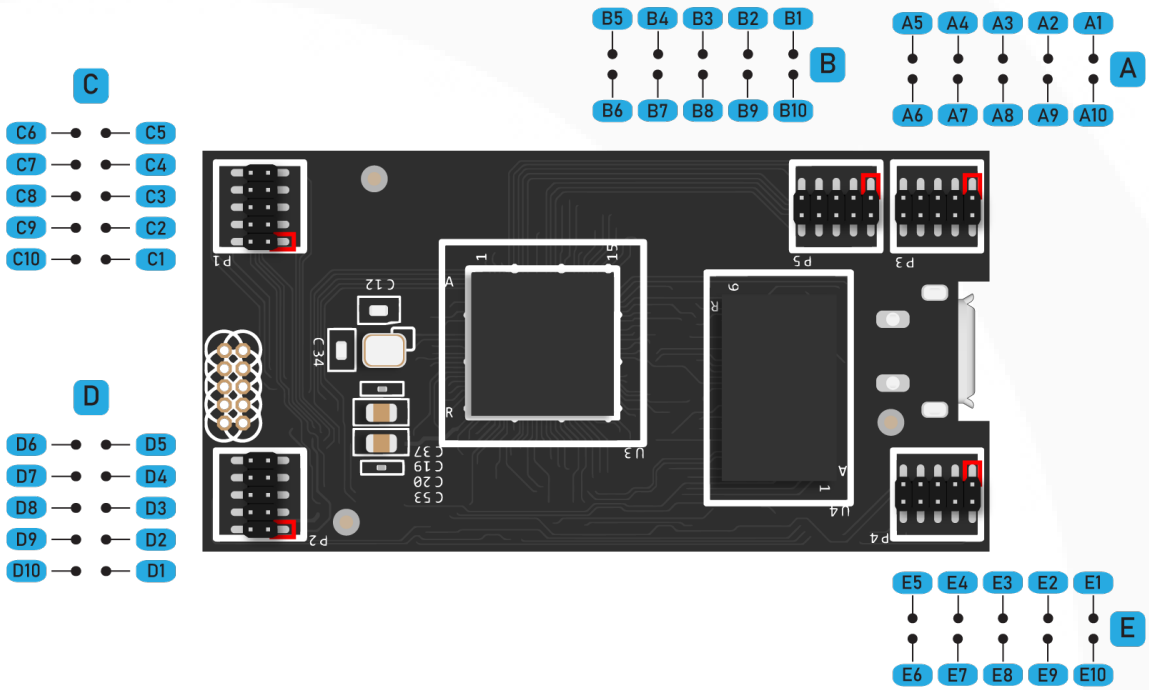

A Table		B Table		C Table			D Table			E Table		
A1	← VIN	B1	SPI1_MISO	C1	ADC1		D1	AUDIO IN L		E1	ADC9	SAI2_MCLK
A2	← VIN	B2	SPI1_SCK	C2	ADC4		D2	AUDIO IN R		E2	ADC10	SAI2_SD_B
A3	→ +3v3_D	B3	USART1_TX	C3	ADC5		D3	AUDIO VCOM		E3	SAI2_SD_A	
A4	→ +3v3_D	B4	SPI1_MOSI	C4	ADC3		D4	AUDIO OUT L-		E4	ADC11	SAI2_SCK_B
A5	→ +3v3_A	B5	USART1_RX	C5	ADC2		D5	AUDIO OUT L+		E5	SDMMC_CK	
A6	GND	B6	SPI1_NSS	C6	ADC6		D6	AUDIO OUT R+		E6	SDMMC_CMD	
A7	GND	B7	I2C1_SCL	C7	ADC0		D7	AUDIO OUT R-		E7	SDMMC_D0	
A8	GND	B8	I2C1_SDA	C8	DAC1	ADC8	D8	SPI2_MOSI	ADC13	E8	SDMMC_D1	
A9	GND	B9	USB_HS_DP	C9	DAC2	ADC7	D9	USB_HS_ID		E9	SDMMC_D2	
A10	GND	B10	USB_HS_DM	C10	SPI2_MISO	ADC12	D10	SAI2_FS_B		E10	SDMMC_D3	

ANALOG AUDIO | ANALOG GPIO | DIGITAL AUDIO GPIO | PERIPHERAL GPIO | USB GPIO | GROUND | POWER | DAISY PIN NAMES

PIN TYPE	MIN	MAX	UNIT
VIN Range	+6.1V	+15V	V
GPIO	0V	+5V	V
Audio Inputs	-1.8V	+1.8V	V

Audio inputs are AC coupled and 3.6Vpp, or approx. 1Vrms.

Powering the Daisy Patch SM from both the VIN and USB: The Daisy Seed2 DFM re-quires VIN for full operation, but will not cause damage if you connect USB while it's powered.It is also possible to partially power the Daisy Seed2 DFM via USB for firmware updates, etc., without VIN applied. However, while powered this way, the Audio codec will not function properly.

All GPIO Pins are 5V tolerant I/O except for the following pins which are 3.3V tolerant I/O:

C5 - (A2/D17, PB1, ADC2)
C4 - (A3/D17, PA7, ADC3)
C6 - (A6/D21, PC4, ADC6)
C9 - (A7/D22, PA5, ADC7)
C8 - (A8/D23, PA4, ADC8)

PINOUT	DAISY PIN NAME*	STM32 PIN NAME	PRIMARY FUNC-TION	ALT. FUNCTIONS 1	ALT. FUNCTIONS 2
A1			VIN	VIN	
A2			VIN	VIN	
A3			+3v3D	3v3_D	
A4			+3v3D	3v3_D	
A5			+3v3A	3v3_A	
A6			GND	GND	
A7			GND	GND	
A8			GND	GND	
A9			GND	GND	
A10			GND	GND	
B1	D9	PB4	GPIO	SPI1_MISO/UART7_TX	SPI1_MISO/I2S1_SDI/SPI3_MISO/ I2S3_SDI/SPI6_MISO
B2	D8	PG11	GPIO	SPI1_SCK/I2S1_CK	LPTIM1_IN2/HRTIM_EEV4
B3	D13	PB6	GPIO	USART1_TX/LPUART1_TX/UART5_TX	I2C1_SCL/I2C4_SCL/ TIM16_CH1N/ TIM4_CH1
B4	D10	PB5	GPIO	SPI1_MOSI/UART5_RX	SPI1_MOSI/I2S1_SDO/SPI3_MOSI/ I2S3_SDO/SPI6_MOSI/I2C4_SMBA/ TIM17_BKIN
B5	D14	PB7	GPIO	USART1_RX/LPUART1_RX	I2C1_SDA/I2C4_SDA/TIM17_CH1N/ TIM4_CH2
B6	D7	PG10	GPIO	SPI1_NSS/I2S1_WS	HRTIM_FLT5
B7	D11	PB8	GPIO	I2C1_SCL/UART4_RX	I2C4_SCL/TIM16_CH1/TIM4_CH3
B8	D12	PB9	GPIO	I2C1_SDA/UART4_TX/SPI2_NSS/ I2S2_WS	I2C4_SDA/I2C4_SMBA/TIM17_CH1/ TIM4_CH4
B9	D30	PB15	GPIO	USB_HS_D+/USART1_RX	
B10	D29	PB14	GPIO	USB_HS_D-/USART_1_TX	TIM1_CH2N
C1	D16 / A1	PA3	GPIO	ADC1/USART2_RX	TIM2_CH4/TIM5_CH4
C2	D19 / A4	PA6	GPIO	ADC4/SPI1_MISO/I2S1_SDI/SPI6_ MISO	TIM1_BKIN/TIM3_CH1
C3	D20 / A5	PC1	GPIO	ADC5	
C4	D18 / A3	PA7	GPIO	ADC3/SPI1_MOSI/I2S1_SDO/ SPI6_MOSI	TIM1_CH1N/TIM3_CH2
C5	D17 / A2	PB1	GPIO	ADC2	TIM1_CH3N/TIM3_CH4
C6	D21 / A6	PC4	GPIO	ADC6/I2S1_MCK	
C7	D15 / A0	PC0	GPIO	ADC0/SAI2_FS_B	
C8	D23 / A8	PA4	GPIO	DAC1/ADC8	SPI1_NSS/I2S1_WS/SPI3_NSS/ I2S3_WS/SPI6_NSS/D1PWREN
C9	D22 / A7	PA5	GPIO	DAC2/ADC7	SPI1_SCK/I2S1_CK/SPI6_SCK/ D2PWREN/TIM2_CH1
C10	D31** / A12	PC2	GPIO	SPI2_MISO/ADC12	

*Pin names are the same indices preceded by: “D” for Digital GPIO or “A” for Analog I/O

**In Arduino, Pin D31 is named D32 due to the built-in LED having been preassigned to D31 on the the original Daisy Seed

PINOUT	DAISY PIN NAME*	STM32 PIN NAME	PRIMARY FUNC-TION	ALT. FUNCTIONS 1	ALT. FUNCTIONS 2
D1			AUDIO IN L	AUDIO IN L	
D2			AUDIO IN R	AUDIO IN R	
D3				AUDIO VCOM	
D4			AUDIO OUT L	AUDIO OUT L-	
D5			AUDIO OUT L	AUDIO OUT L+	
D6			AUDIO OUT R	AUDIO OUT R+	
D7			AUDIO OUT R	AUDIO OUT R-	
D8	D32** / A13	PC3	GPIO	SPI2_MOSI/ADC13	
D9	D0	PB12	GPIO	USB_HS_ID/UART5_RX/USART3_CK	TIM1_BKIN
D10	D27	PG9	GPIO	SAI2_FS_B/USART6_RX	SPI1_MISO/I2S1_SDI
E1	D24 / A9	PA1	GPIO	ADC9/SAI2_MCLK_B	UART4_RX/TIM2_CH2/TIM5_CH2
E2	D25 / A10	PA0	GPIO	ADC10/SAI2_SD_B	UART4_TX/TIM2_CH1/TIM2_ETR/ TIM5_CH1
E3	D26	PD11	GPIO	SAI2_SD_A/I2C4_SMBA	LPTIM2_IN2
E4	D28 / A11	PA2	GPIO	ADC11/SAI2_SCK_B	USART2_TX/TIM2_CH3/TIM5_CH3
E5	D6	PC12	GPIO	SDMMC_CK/UART5_TX/USART3_CK	SPI3_MOSI/I2S3_SDO
E6	D5	PD2	GPIO	SDMMC_CMD/UART5_RX	
E7	D4	PC8	GPIO	SDMMC_D0/UART5_CTS	
E8	D3	PC9	GPIO	SDMMC_D1/UART5_CTS	I2S_CKIN/MCO2
E9	D2	PC10	GPIO	SDMMC_D2/USART3_TX/UART4_TX	SPI3_SCK/I2S3_CK/HRTIM_EEV1
E10	D1	PC11	GPIO	SDMMC_D3/USART3_RX/UART4_RX	SPI3_MISO/ I2S3_SDI/HRTIM_FLT2

*Pin names are the same indices preceded by: “D” for Digital GPIO or “A” for Analog I/O

**In Arduino, Pin D32 is named D33 due to the built-in LED having been preassigned to D32 on the the original Daisy Seed

Electrical Characteristics - Table 3

The min/max rating in this table represents the expected operating range for the device. Signals outside of this range will not necessarily damage the Daisy Seed. See Table 1 for Absolute min/max ratings.

PINOUT	DAISY PIN NAME	MIN	MAX	TYPICAL
A1		+4V	+15V	+4V to +15V
A2		+4V	+15V	+4V to +15V
A3		0V	+3V3	0 to +3V3
A4		0V	+3V3	0 to +3V3
A5		0V	+3V3	0 to +3V3
A6				GND
A7				GND
A8				GND
A9				GND
A10				GND
B1		0V	+3V3	0 to +3V3
B2	D8	0	+3V3	0 to +3V3
B3	D13	0	+3V3	0 to +3V3
B4	D10	0	+3V3	0 to +3V3
B5	D14	0	+3V3	0 to +3V3
B6	D7	-1V8	+1V8	3.6Vpp
B7	D11	-1V8	+1V8	3.6Vpp
B8	D12			0dBFs @ 1Vrms
B9	D30			0dBFs @ 1Vrms
B10	D29			GND
C1	D16 / A1			+3V3 (output only)
C2	D19 / A4	0V	+3V3	0 to +3V3
C3	D20 / A5	0V	+3V3	0 to +3V3
C4	D18 / A3	0V	+3V3	0 to +3V3
C5	D17 / A2	0V	+3V3	0 to +3V3
C6	D21 / A6	0V	+3V3	0 to +3V3
C7	D15 / A0	0V	+3V3	0 to +3V3
C8	D23 / A8	0V	+3V3	0 to +3V3
C9	D22 / A7	0V	+3V3	0 to +3V3
C10	D31* / A12	0V	+3V3	0 to +3V3

*In Arduino, Pin D31 is named D32 due to the built-in LED having been preassigned to D32 on the original Daisy Seed

Electrical Characteristics - Table 3

The min/max rating in this table represents the expected operating range for the device. Signals outside of this range will not necessarily damage the Daisy Seed. See Table 1 for Absolute min/max ratings.

PINOUT	DAISY PIN NAME	MIN	MAX	TYPICAL
D1		-1V8	+1V8	3.6Vpp
D2		-1V8	+1V8	3.6Vpp
D3				
D4				0dBFs @ 1Vrms
D5				0dBFs @ 1Vrms
D6				0dBFs @ 1Vrms
D7				0dBFs @ 1Vrms
D8	D32* / A13	0V	+3V3	0 to +3V3
D9	D0	0V	+3V3	0 to +3V3
D10	D27	0V	+3V3	0 to +3V3
E1	D24 / A9	0V	+3V3	0 to +3V3
E2	D25 / A10	0V	+3V3	0 to +3V3
E3	D26	0V	+3V3	0 to +3V3
E4	D28 / A11	0V	+3V3	0 to +3V3
E5	D6	0V	+3V3	0 to +3V3
E6	D5	0V	+3V3	0 to +3V3
E7	D4	0V	+3V3	0 to +3V3
E8	D3	0V	+3V3	0 to +3V3
E9	D2	0V	+3V3	0 to +3V3
E10	D1	0V	+3V3	0 to +3V3

*In Arduino, Pin D32 is named D33 due to the built-in LED having been preassigned to D32 on the the original Daisy Seed

Audio Performance

Noise Floor

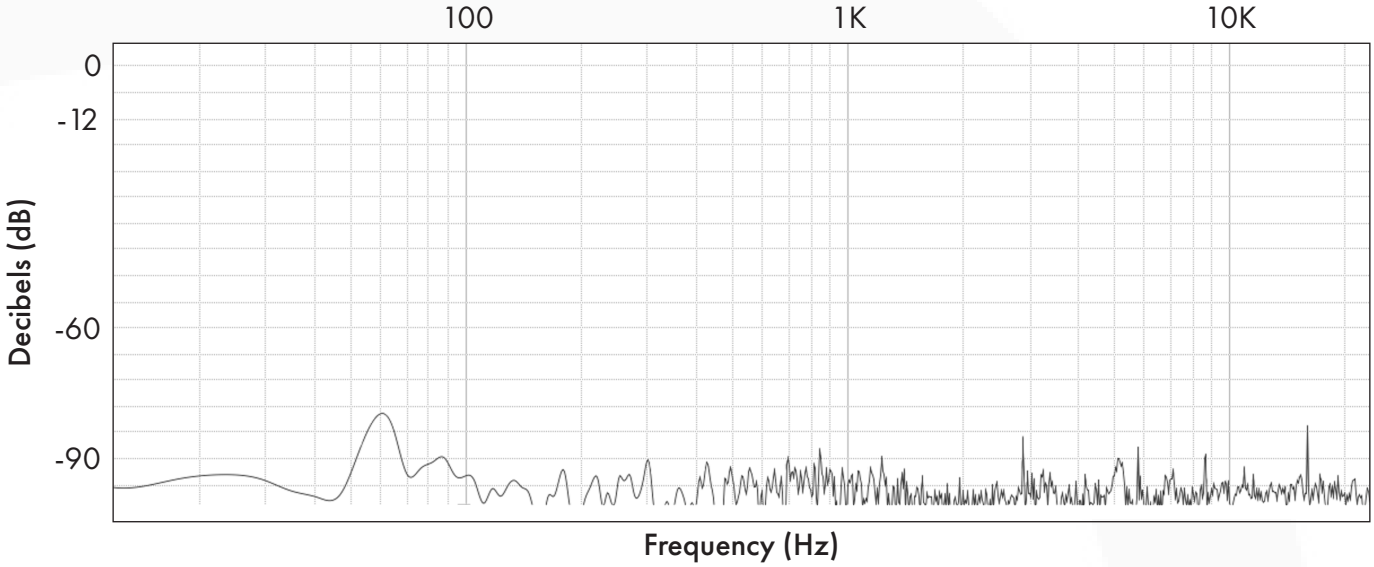

SNR: 1kHz Reference Sine Wave

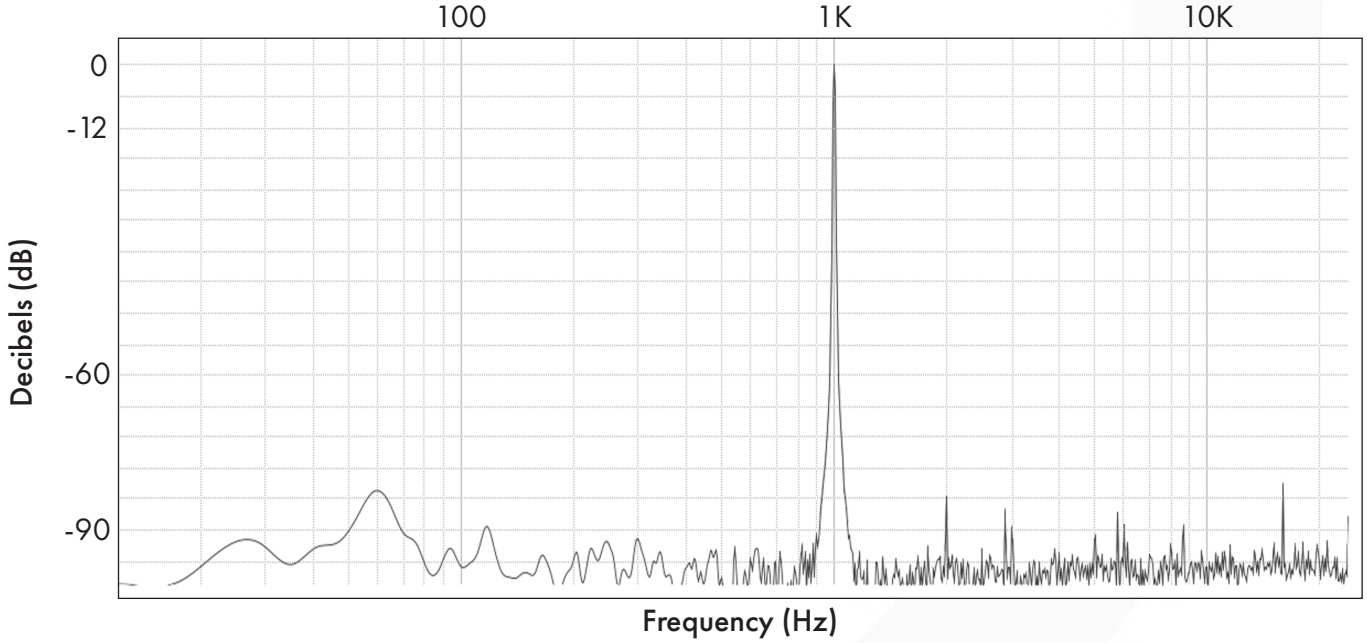

Typical Applications

For electrical characteristics, see Table 2

Figure 1.0 - Power

* >=6.1V

Figure 1.1 - Line Level Audio Input

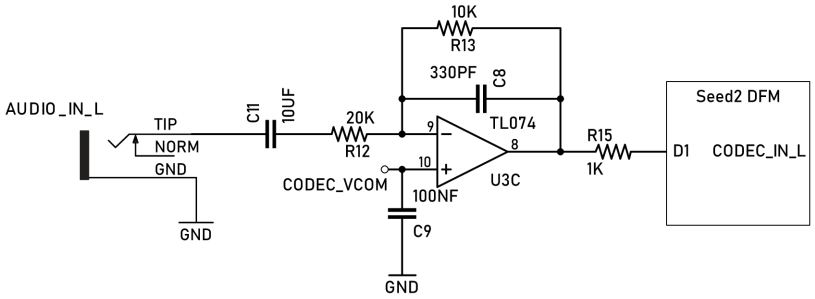

Figure 1.2 - Line Level Audio Output for Single-Supply

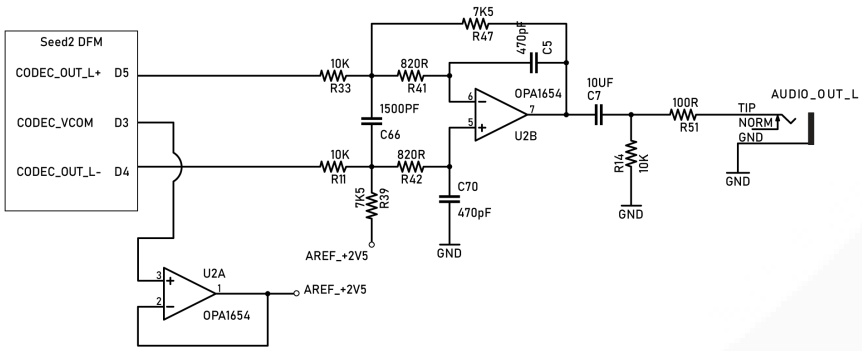

Typical Applications

For electrical characteristics, see Table 2

Figure 1.3 - Eurorack Level Audio Input

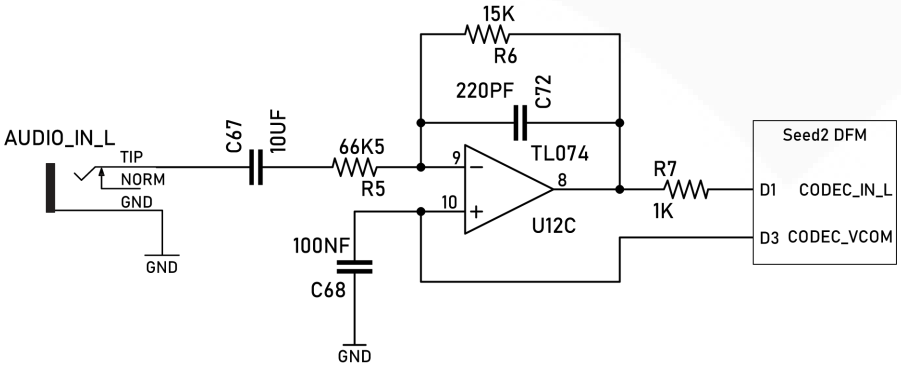

Figure 1.4 - Eurorack Level Audio Output, DC Coupled

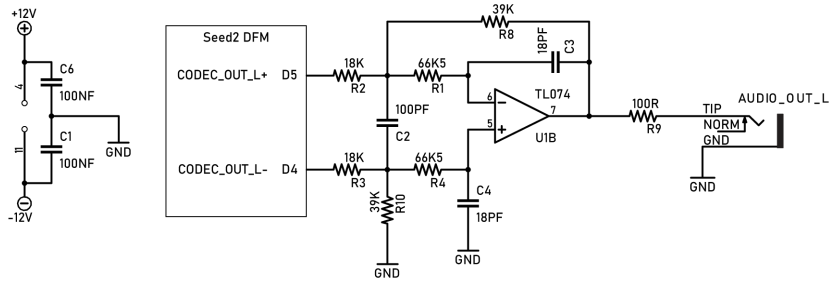

Figure 1.5 - Eurorack Level Audio Output, AC Coupled

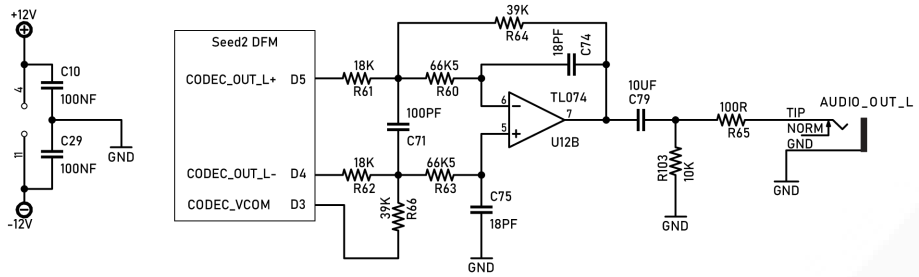

Typical Applications

For electrical characteristics, see Table 2

Figure 1.6 - Guitar Level Audio Input - AC Coupled

Example Parts:
Transistor MPN: MMBF4416A

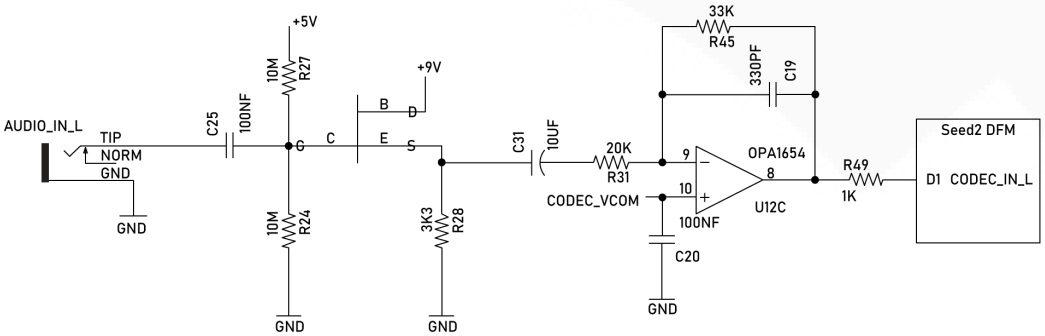

Figure 1.7 - Guitar Level Audio Output - for Single Supply

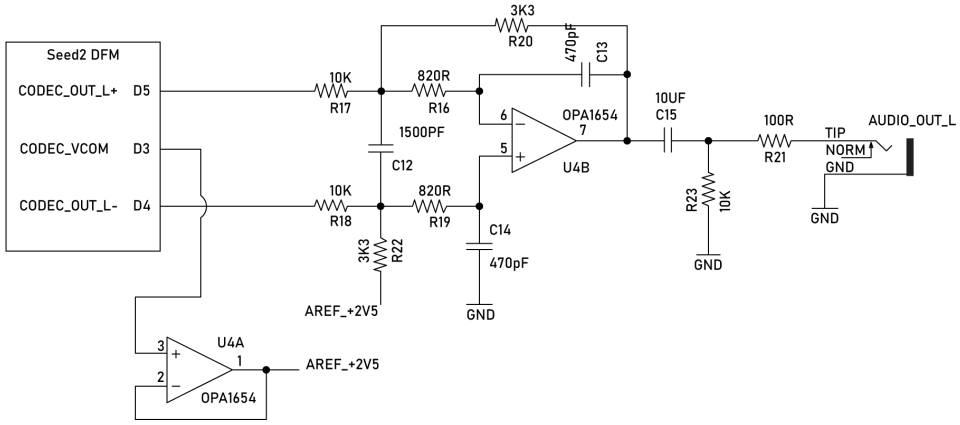

Figure 1.8 - Expression Input

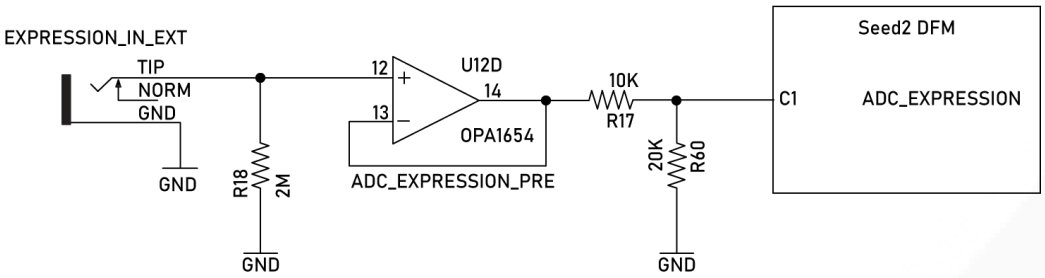

Typical Applications

For electrical characteristics, see Table 2

Figure 1.9 - Potentiometer

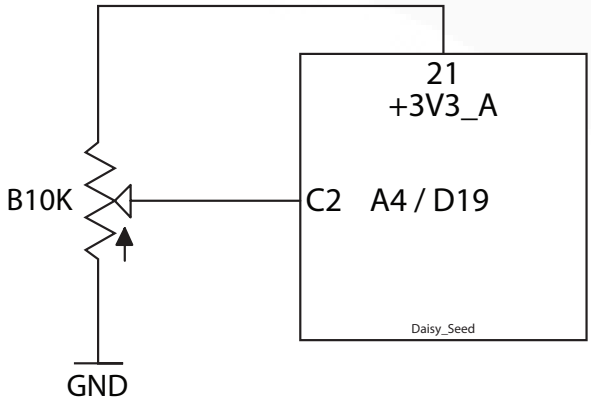

Available Pins: Any ADC

Example Parts:
Alpha 9mm Linear 10K D Shaft
MPN: RD901F-40-15F-B10K-00D70

Figure 1.10 - Toggle Switch

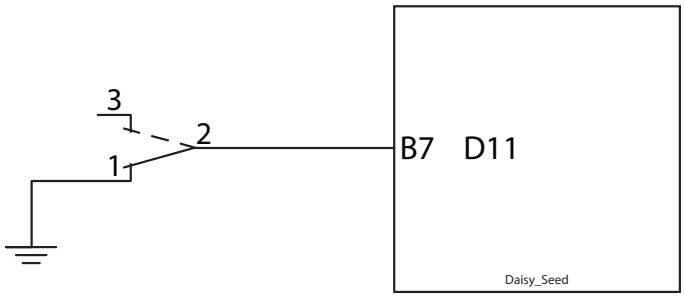

Available Pins: Any GPIO

Example Parts:
Toggle Switch
MPN: 2MS1T1B1M2QES

Figure 1.11 - Tactile Switch

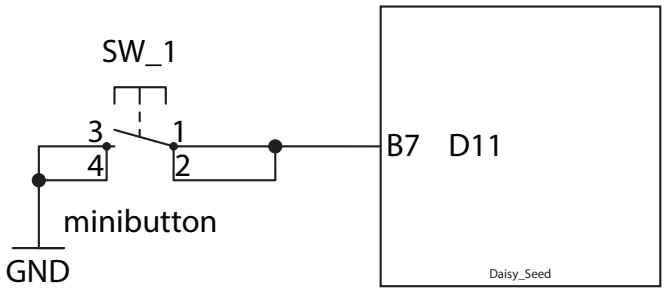

Available Pins: Any GPIO

Example Parts:
Tactile Switch
MPN: TL1105SPF250Q

Typical Applications

For electrical characteristics, see Table 2

Figure 1.12 - Micro SD

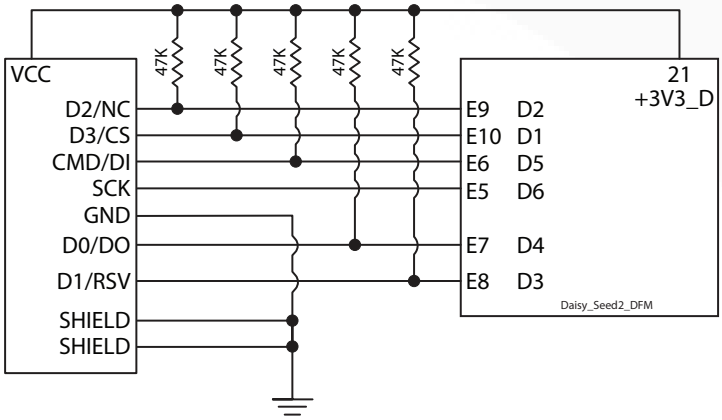

47K pullup resistors necessary, except for Pin E5.

Example Parts:
Vertical MicroSD Card Connector
MPN: PJS008U-3000-0

Figure 1.13 - LED

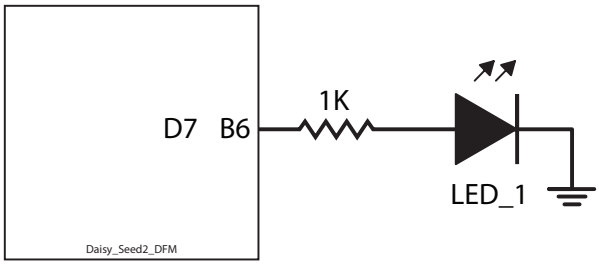

Available Pins: Any GPIO

Example Parts:
3mm LED
MPN: WP132XND

Note: Resistor value is dependent on desired brightness and/or LED part

Technical Drawing

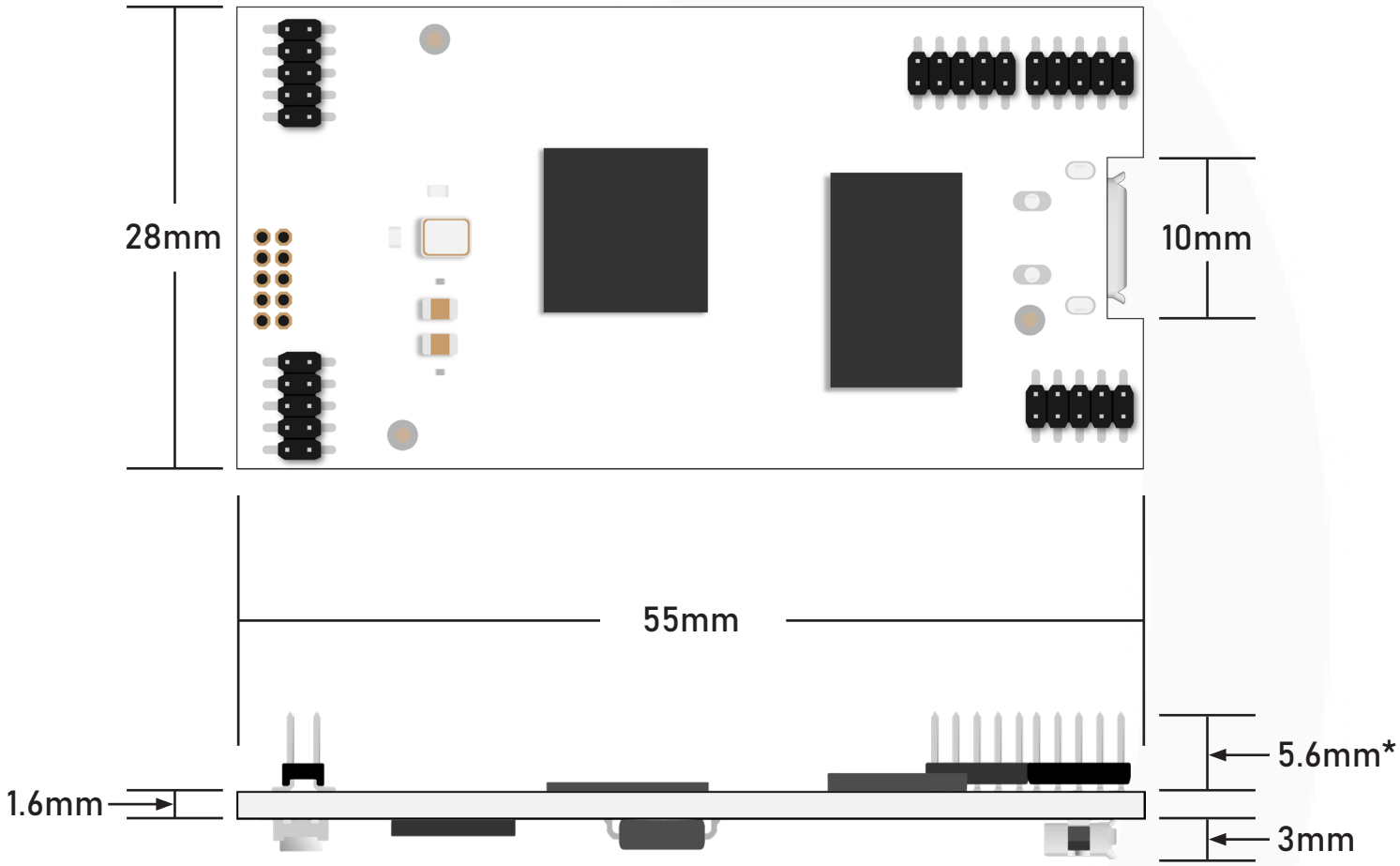

*A small number of Seed2 DFMs have an alternative header height of 4.7mm due to parts shortages compensation.

Landing Pattern

Dimensions in mm (inches)

PTH

Ships with male headers installed. Mating headers for the carrier board are female.
Mating header MPN: 20021311-00010T4LF

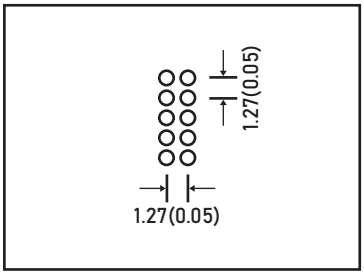

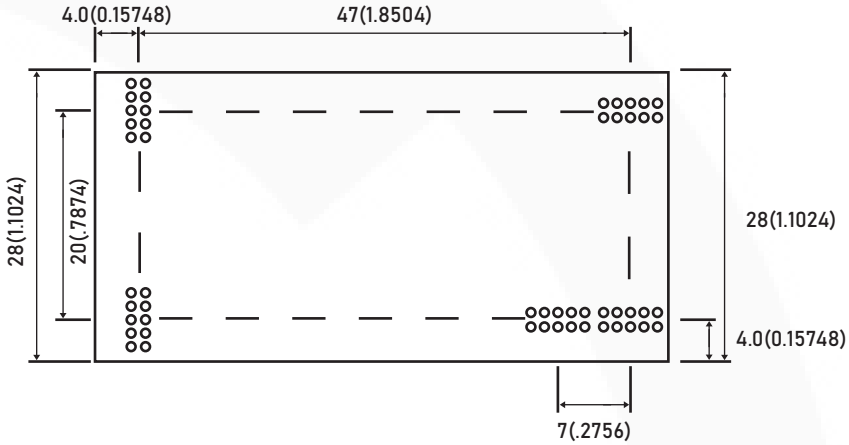

SMT

Ships with male headers installed. Mating headers for the carrier board are female.
Mating header MPN: 20021321-00010C4LF

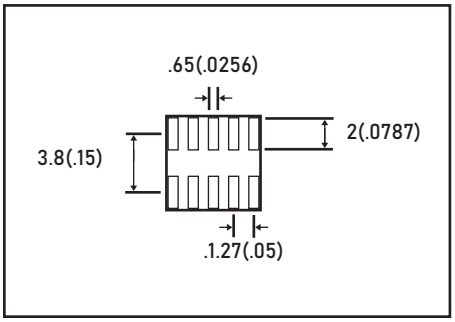

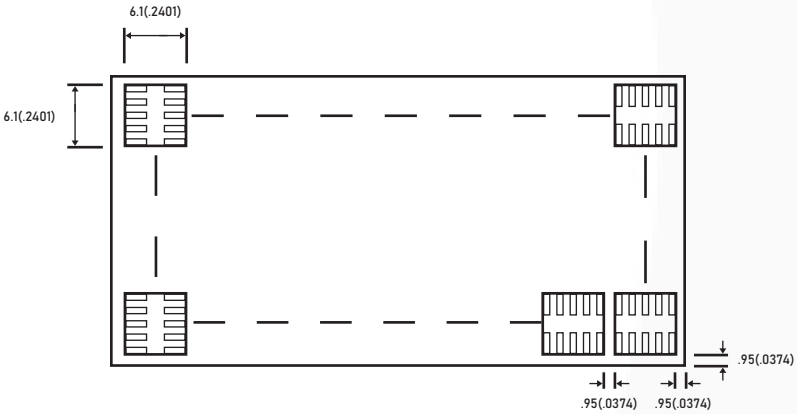

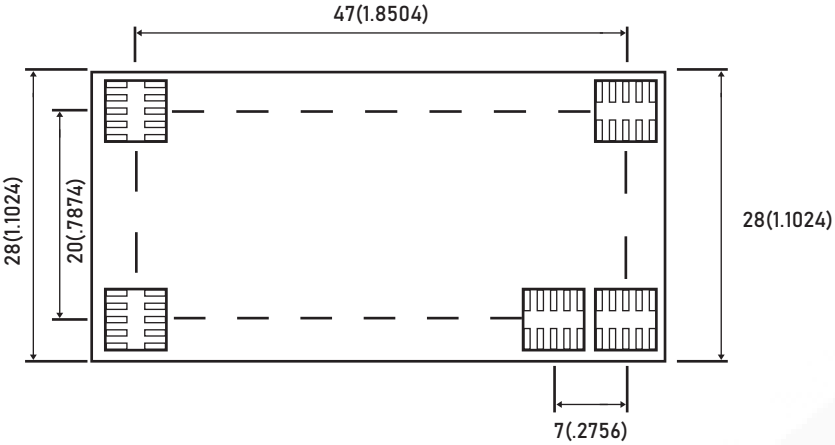

Why The Daisy Seed?

Made In The USA

The Daisy Seed is built by the Electrosmith team in San Clemente, CA. We take pride in knowing that each stage of our manufacturing process is handled in house so that we can provide the best quality, lead time, and pricing.

RoHS Compliant

Electrosmith manufacturing is 100% RoHS compliant. All Electrosmith products are free from RoHS defined hazardous materials.

CE/REACH Compliant

The Daisy Seed is assembled with parts and materials that are compliant with CE/REACH standards. Design with the Seed knowing that it upholds the highest environmental standards for electronic products.

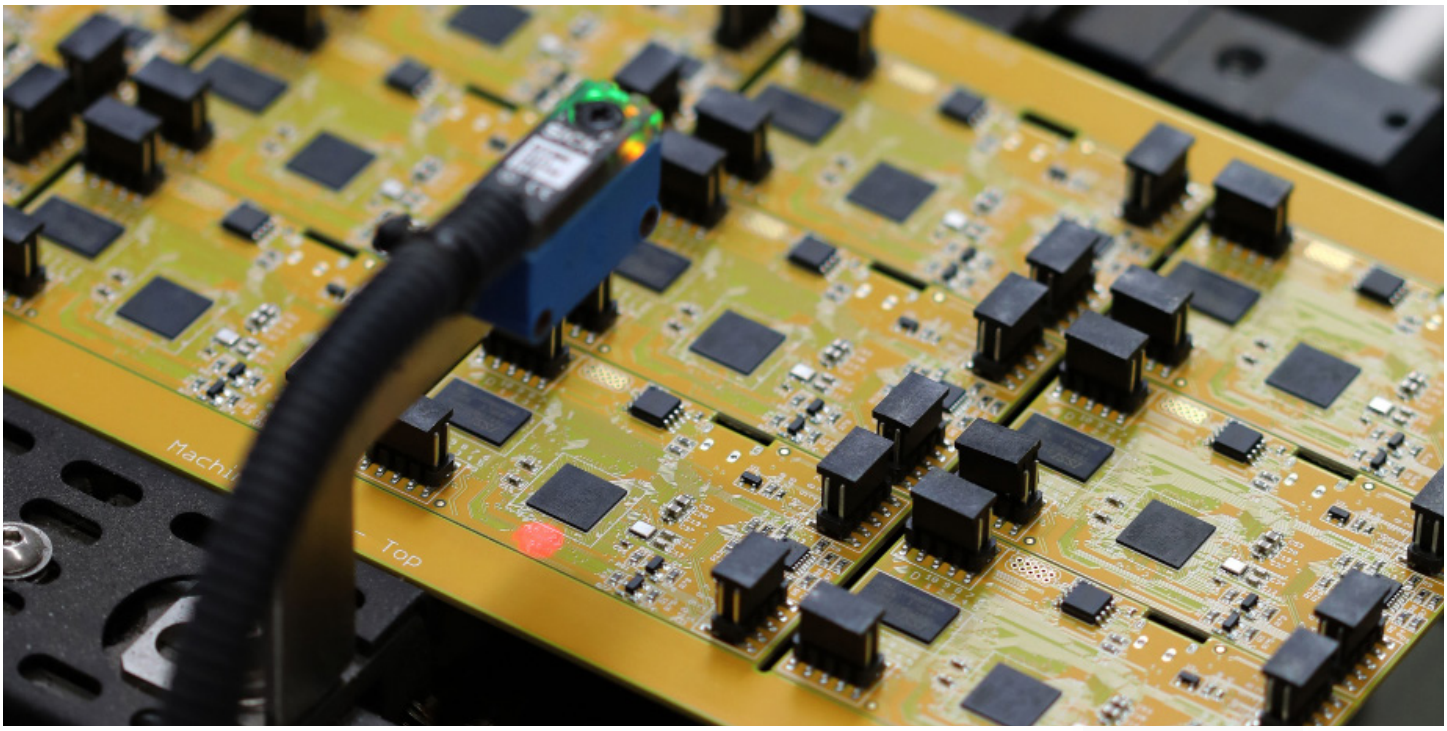

Changelog

RELEASE	DATE	DESCRIPTION
v1.0	15/DEC/2021	• Initial release
v1.0.1	13/APR/2022	• included C10 in the pinout table • Updated landing pattern rotations
v1.0.2	19/APR/2022	• updated Seed illustrations with male headers to match production units.
v1.0.3	12/JUL/2022	• Added effects pedal typical applications.
v1.0.4	14/JUL/2022	• Updated Seed2 DFM photos/graphics with male headers • Fixed landing pattern dimensions • Updated typical applications graphics
v1.0.5	18/JUL/2022	• Updated Daisy pin names and footnotes for C10 and D8
v1.0.6	10/JAN/2023	• hotfix: updated D8 pinout to SPI2_MOSI
v1.0.7	25/JAN/2023	• Updated Absolute Maximum Ratings Table
v1.0.8	13/MAR/2025	• updated pinout
v1.0.9	03/NOV/2025	• fixed typo in description (changed 31 GPIO pins to 33)
v1.0.10	07/JAN/2026	• fixed max voltage typo (now +15V to match hardware specs)
v1.0.11	20/FEB/2026	• fixed typo in SD card and LED typical applications.