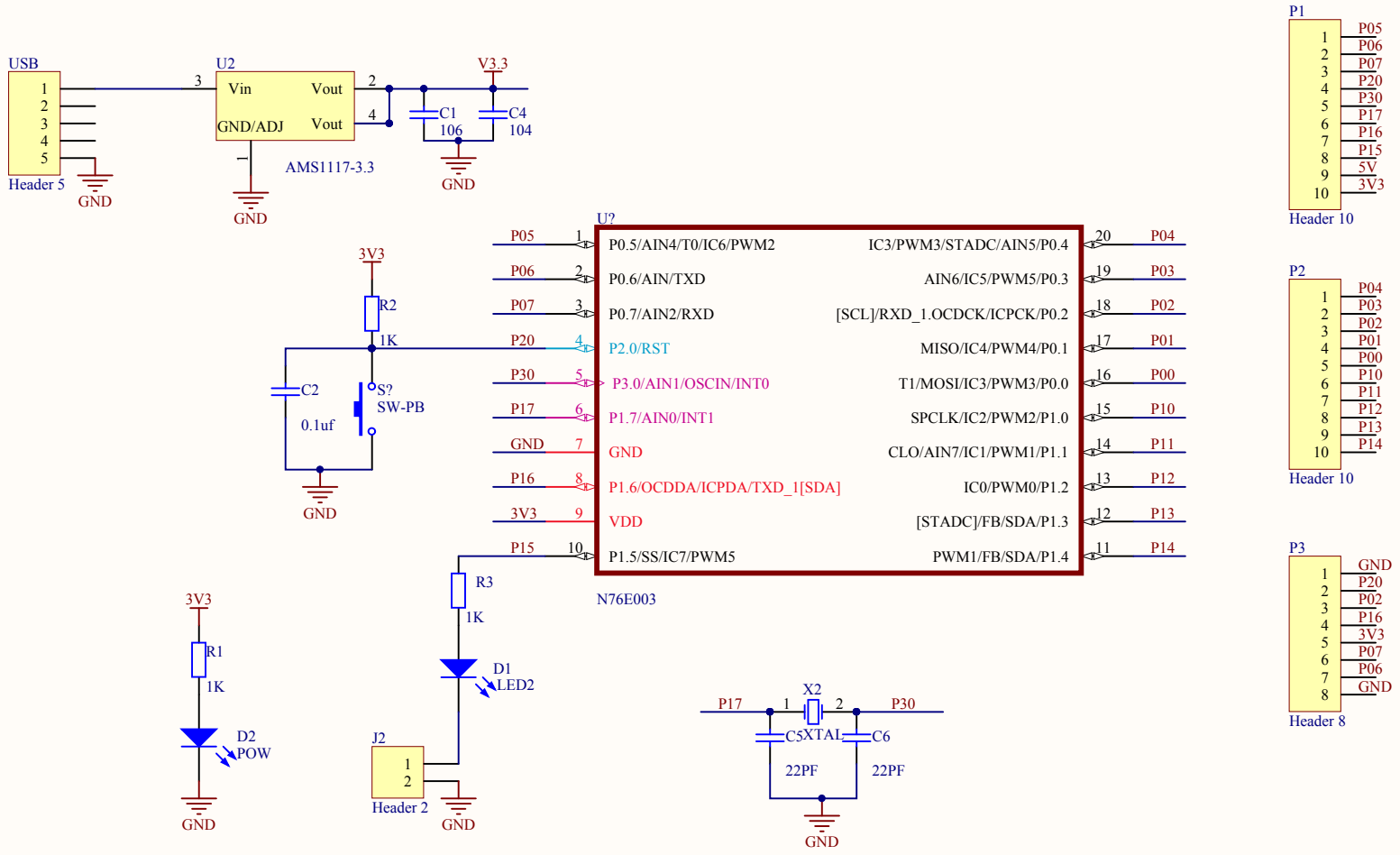

Title		
Size A4	Number	Revision
Date: 2017/3/21	Sheet of	
File: H:\模块资料\新唐\N76原理图.SchDoc	Drawn By:	