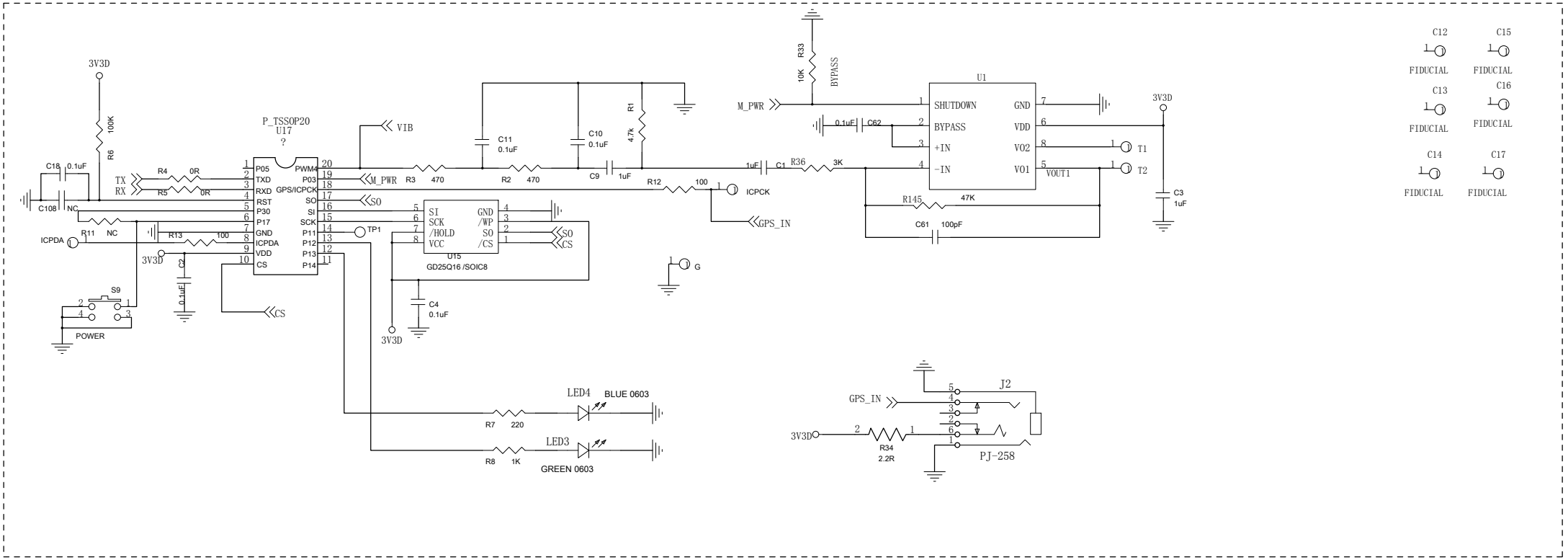

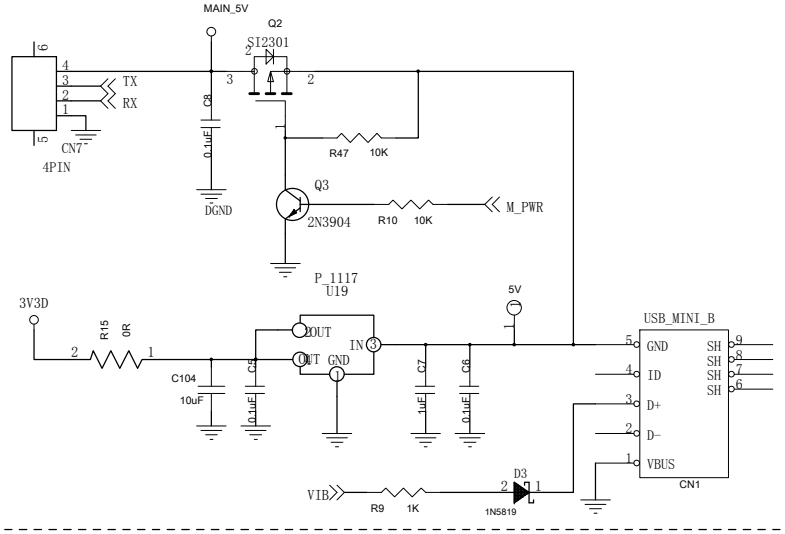

SHENZHEN GREAT CREATION TECHNOLOGY LTD

Title: 02.Main Power		
Size: A2	Document Number: AU3522 LQFP216 Reference Circuit	Rev: V3.2.0.0
Date: Monday, March 16, 2015		Sheet 1 of 1