FOTEK SSR SERIES SOLID STATE RELAY

★High Reliability by S.M.T. & TQC.
(Surface Mounting Technology)
★High Isolation over than 50MΩ/ 500VDC
★High Dielectric over than 2.5KV
★Low Enable Current less than 7.5mA / 12VDC
C MOS IC or TTL Compatible.
★Low EMI / EFI & Surge by Zero Cross Trigger Method.
★High Surge Current Duration Over 10 Times of Rated Current / One Cycle
★High Surge Voltage Duration by Snubber Circuit.
★表面貼焊技術及全面品管，提供最可靠的SSR
★高絕緣阻抗超過 50MΩ / 500VDC
★高耐壓超過2.5KV
★低觸發電流小於7.5mA / 12VDC，可與 CMOS IC及 TTL 匹配
★零點觸發方式避免電磁 / 高頻干擾
★高耐過電流，超過10倍額定電流/一週期
★具緩衝迴路可吸收瞬間突破

Guiding of Model

Terminal Type

Ex.SSR- 40 D A-H
① ②③④⑤

① **Product** 產品別
SSR:SINGLE PHASE SOLID STATE RELAY
單相固態繼電器
STR:THREE PHASE SOLID STATE RELAY
三相固態繼電器

② **Output Current** 輸出電流
10 : 10A 25 : 25A
40 : 40A 50 : 50A
75 : 75A

③ **Input Voltage** 輸入方式
D:DC3W～32V<ON/OFF>
A:AC80～250V<ON/OFF>
L:4～20mA(linear)
V:VARIABLE RESISTER

④ **Output Voltage** 輸出電壓
A:AC VOLTAGE
D:DC VOLTAGE

⑤ **Output Voltage Range** 輸出電壓範圍
H : High Voltage Type < 90 ~ 480VAC >
Non: Standard Type < 24 ~ 380VAC >

PCB Type

Ex.SSR -P 03 D A
① ② ③④⑤

① **Product** 產品別
SSR : SINGLE PHASE SOLID STATE

② **Mounting Method** 固定方式
PCB:PCB TYPE

③ **Output Current** 輸出電流
03 = 3A
05 = 5A

④ **Input Method** 輸入方式
D : DC VOLTAGE

⑤ **Output Voltage** 輸出電壓
D : DC 5 ~ 60V
A : AC 24 ~ 280V

Control Method

Zero Cross Trigger Method

Output TURN ON or TURN OFF only on Zero Cross Point of sine wave , may avoid surge or EMI / RFI occurring.
Specially suited to control resistive , capacitive and Non - saturated inductive loads.
輸出只在正弦波的零點才會動作或復歸，可避免生突波或 EM / RFI，特別適於控制阻抗性，電容性和不飽和感抗性等負載。

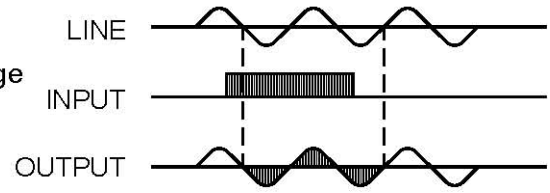

Variable Resistance Control Method

< Trimmer Control Method >

Power Output is Controlled by the Trigger Angle of Triac with Variable Resister 250K Ω/110VAC, 500K Ω /220VAC
輸出功率以可變電阻 250K Ω/110VAC,500K Ω/220VAC 控制 Triac 觸發角決定輸出功率。

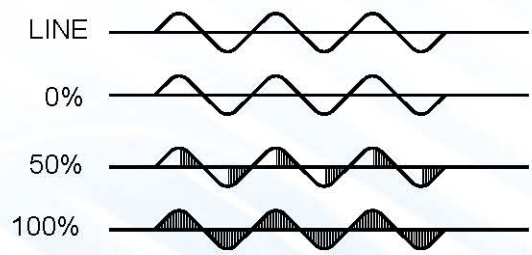

Application Hints

Input	NPN	Output	NO	Input	PNP	Output	NO	Input	L.S.	Output	NO
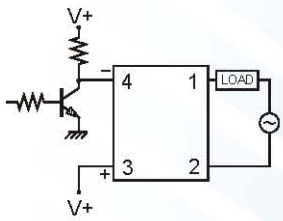				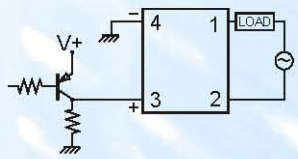				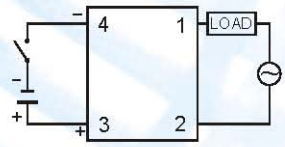			
Input	NPN	Output	NC	Input	PNP	Output	NC	Latch Circuit (AC to AC)			
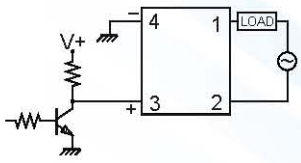				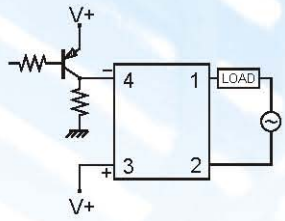				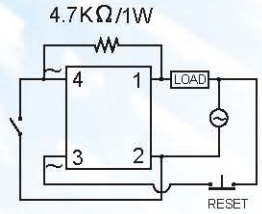			

Specification

Type	Terminal Type					PCB Type
Model	**SSR-10DA**	**SSR-25DA**	**SSR-40DA**	**SSR-25DA-H**	**SSR-40DA-H**	**SSR-P03DA**
Rated Load Current	**10A**	**25A**	**40A**	**25A**	**40A**	**3A**
Input Data						
Operating Voltage	3~32VDC					
Min. ON / OFF Voltage	ON > 2.4V , OFF < 1.0V					
Trigger Current	7.5mA / 12V					
Control Method	Zero Cross Trigger					
Output Data						
Operating Voltage	24~380VAC			90~480VAC		24~380VAC
Min. Black Voltage	600 VAC < Repetive >					
Voltage Drop	1.6 V / 25 C					
Max. Durated Current	135A	275A	410A	275A	410A	135A
Leakage Current	3.0mA	3.0mA	3.0mA	5.0mA	5.0mA	3.0mA
Response Time	ON < 10ms , OFF < 10ms					
General Data						
Dielectric Strength	Over 2.5KVAC / 1min.					
Isolation Strength	Over 50MΩ / 500VDC					
Operating Temperature	-20 C ~+80 C					
Housing Material	Intensive ABS					
Weight	Appr. 105g					Appr. 15g
Connection Diagram						

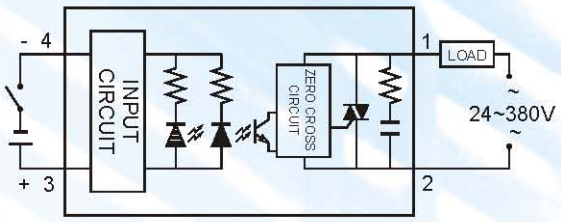

■Specification

Type	Terminal Type			
Model	SSR-50DA	SSR-75DA	SSR-50DA-H	SSR-75DA-H
Rated Load Current	50A	75A	50A	75A
Input Data				
Operating Voltage	3～32VDC			
Min. ON / OFF Voltage	ON>2.4V , OFF<1.0V			
Trigger Current	7.5mA / 12V			
Control Method	Zero Cross Trigger			
Operating Data				
Operating Voltage	24～380VAC		90～480VAC	
Min. Blocking Voltage	600 VAC<Repetitive>			
Voltage Drop	1.6V / 25℃			
Max. Duratde Current	550A	820A	550A	820A
Leakage Current Max.	6.0mA	6.0mA	6.0mA	6.0mA
Response Time	ON<10ms , OFF<10ms			
General Data				
Dielectric Strength	Over 2.5KVAC/1min.			
Isolation Strength	Over 50M Ω/ 500VDC			
Operating Temperature	-20℃ ～+80℃			
Housing Material	Intensive ABS			
Weight	Appr.125g			
Connection Diagram/Dimension				

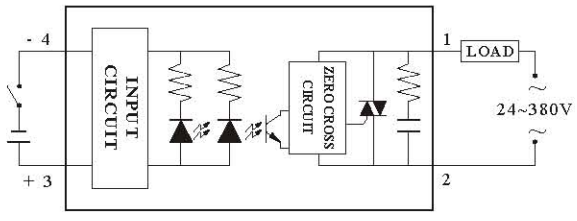

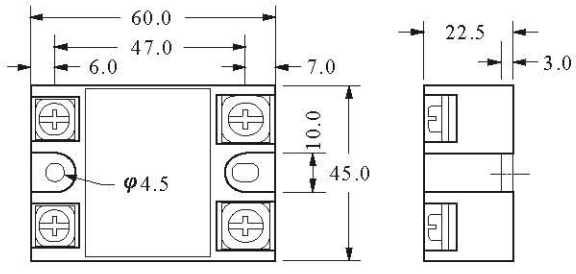

Curve of Characteristic

Max. Allowable Case Temperature
最高容許表面溫度

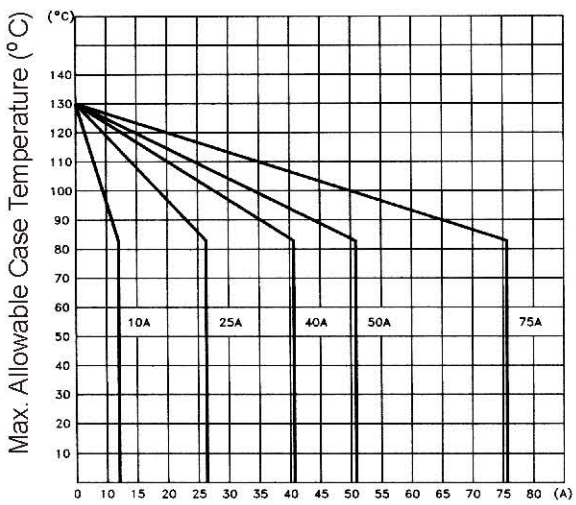

ON State Current (A) 動作電流

Peak Surge Current/Surge Current Duration
衝擊電流／承受次數

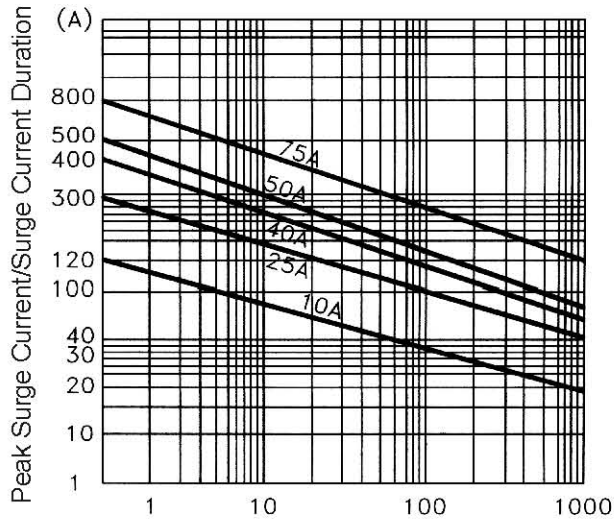

Surge Current Duration (Full cycles)

Dimension

Terminal Type	PCB Type
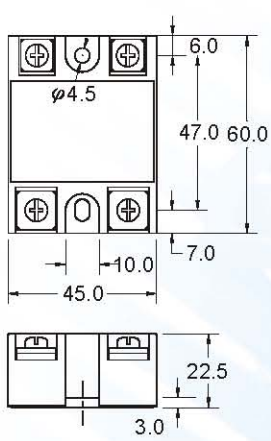	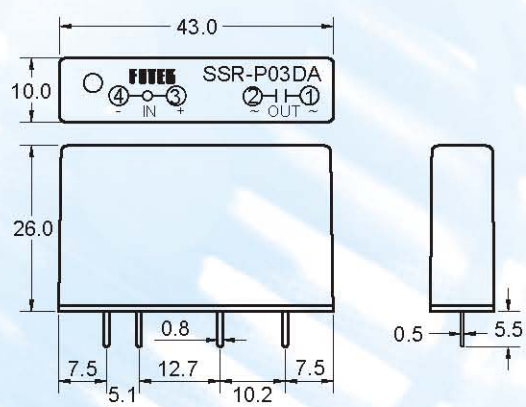

Dimension < Heat Sink >

Standard Type

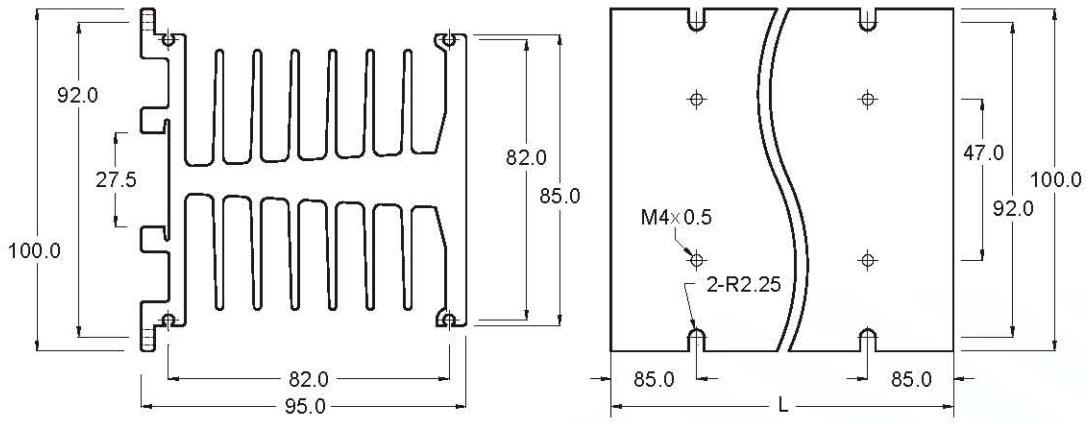

H Type

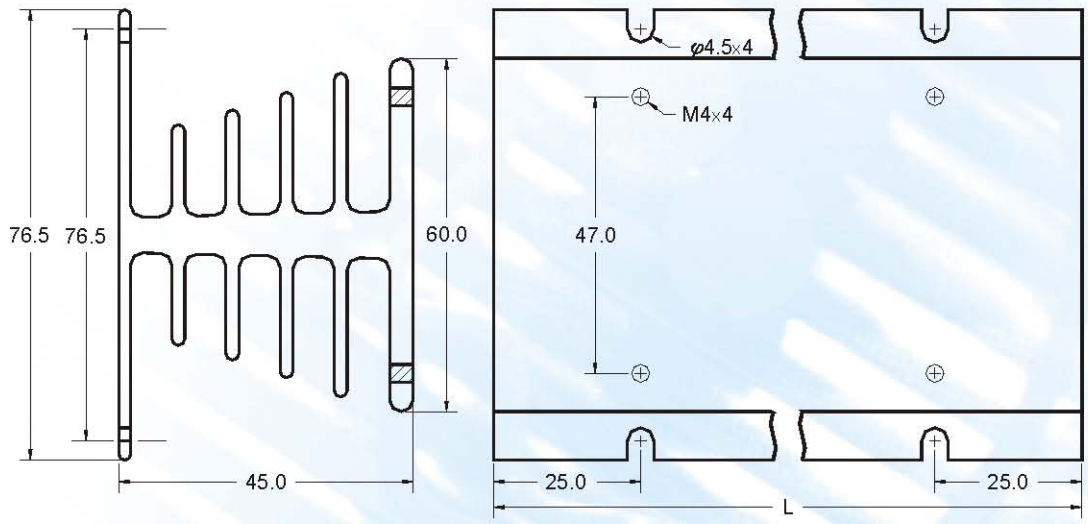

MODEL	LENGTH(L)mm	CURRENT DURATION	PCS OF SSR
HS-50H	50.0	10A MAX.	SIGLE
HS-100H	100.0	25A MAX.	TWICE
HS-150H	150.0	40A MAX.	THREE
HS-200H	200.0		FOUR