Click here to ask about the production status of specific part numbers.

MAX6675

Cold-Junction-Compensated K-Thermocouple-to-Digital Converter (0°C to +1024°C)

General Description

The MAX6675 performs cold-junction compensation and digitizes the signal from a type-K thermocouple. The data is output in a 12-bit resolution, SPI-compatible, read-only format.

This converter resolves temperatures to 0.25°C, allows readings as high as +1024°C, and exhibits thermocouple accuracy of 8 LSBs for temperatures ranging from 0°C to +700°C.

The MAX6675 is available in a small, 8-pin SO package.

Applications

- Industrial
- Appliances
- HVAC

Features

- Direct Digital Conversion of Type -K Thermocouple Output
- Cold-Junction Compensation
- Simple SPI-Compatible Serial Interface
- 12-Bit, 0.25°C Resolution
- Open Thermocouple Detection

Ordering Information

PART	TEMP RANGE	PIN-PACKAGE
MAX6675ISA	-20°C to +85°C	8 SO

Pin Configuration

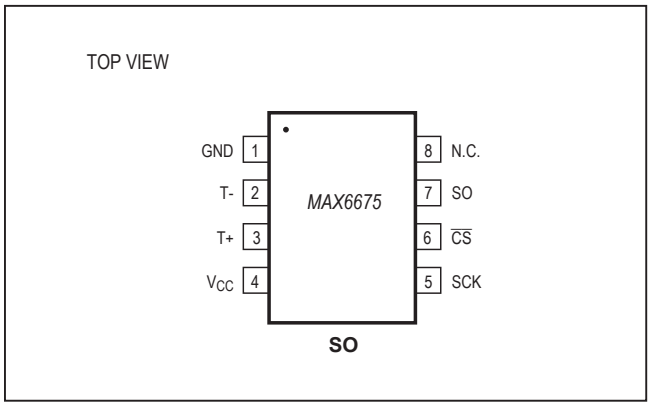

Typical Application Circuit

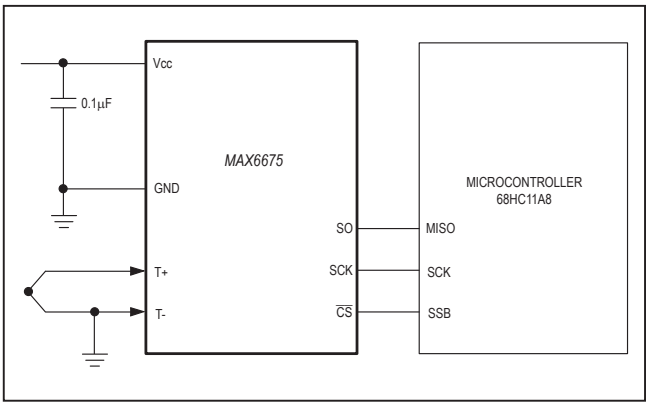

Absolute Maximum Ratings

Supply Voltage (V_{CC} to GND) ..... -0.3V to +6V
SO, SCK, $\overline{CS}$, T-, T+ to GND .....-0.3V to V_{CC} + 0.3V
SO Current 50mA
ESD Protection (Human Body Model) ..... ±2000V
Continuous Power Dissipation (T_A = +70°C)
8-Pin SO (derate 5.88mW/°C above +70°C) 471mW
Operating Temperature Range ..... -20°C to +85°C
Storage Temperature Range ..... -65°C to +150°C
Junction Temperature ..... +150°C
SO Package
Vapor Phase (60s) .....+215°C
Infrared (15s) .....+220°C
Lead Temperature (soldering, 10s) ..... +300°C

Stresses beyond those listed under "Absolute Maximum Ratings" may cause permanent damage to the device. These are stress ratings only, and functional operation of the device at these or any other conditions beyond those indicated in the operational sections of the specifications is not implied. Exposure to absolute maximum rating conditions for extended periods may affect device reliability.

Electrical Characteristics

(V_{CC} = +3.0V to +5.5V, T_A = -20°C to +85°C, unless otherwise noted. Typical values specified at +25°C.) (Note 1)

PARAMETER	SYMBOL	CONDITIONS		MIN	TYP	MAX	UNITS
Temperature Error		$T_{THERMOCOUPLE}$ = +700°C, T_A = +25°C (Note 2)	V_{CC} = +3.3V	-5		+5	LSB
			V_{CC} = +5V	-6		+6	
		$T_{THERMOCOUPLE}$ = 0°C to +700°C, T_A = +25°C (Note 2)	V_{CC} = +3.3V	-8		+8	
			V_{CC} = +5V	-9		+9	
		$T_{THERMOCOUPLE}$ = +700°C to +1000°C, T_A = +25°C (Note 2)	V_{CC} = +3.3V	-17		+17	
			V_{CC} = +5V	-19		+19	
Thermocouple Conversion Constant					10.25		µV/LSB
Cold-Junction Compensation Error		T_A = -20°C to +85°C (Note 2)	V_{CC} = +3.3V	-3.0		+3.0	°C
			V_{CC} = +5V	-3.0		+3.0	
Resolution					0.25		°C
Thermocouple Input Impedance					60		kΩ
Supply Voltage	V_{CC}			3.0		5.5	V
Supply Current	I_{CC}				0.7	1.5	mA
Power-On Reset Threshold		V_{CC} rising		1	2	2.5	V
Power-On Reset Hysteresis					50		mV
Conversion Time		(Note 2)			0.17	0.22	s
SERIAL INTERFACE							
Input Low Voltage	V_{IL}					0.3 x V_{CC}	V
Input High Voltage	V_{IH}			0.7 x V_{CC}			V
Input Leakage Current	I_{LEAK}	V_{IN} = GND or V_{CC}				±5	µA
Input Capacitance	C_{IN}				5		pF

Electrical Characteristics (continued)

(V_{CC} = +3.0V to +5.5V, T_A = -20°C to +85°C, unless otherwise noted. Typical values specified at +25°C.) (Note 1)

PARAMETER	SYMBOL	CONDITIONS	MIN	TYP	MAX	UNITS
Output High Voltage	V_{OH}	I_{SOURCE} = 1.6mA	V_{CC} - 0.4			V
Output Low Voltage	V_{OL}	I_{SINK} = 1.6mA			0.4	V
TIMING						
Serial Clock Frequency	f_{SCL}				4.3	MHz
SCK Pulse High Width	t_{CH}		100			ns
SCK Pulse Low Width	t_{CL}		100			ns
CSB Fall to SCK Rise	t_{CSS}	C_L = 10pF	100			ns
CSB Fall to Output Enable	t_{DV}	C_L = 10pF			100	ns
CSB Rise to Output Disable	t_{TR}	C_L = 10pF			100	ns
SCK Fall to Output Data Valid	t_{DO}	C_L = 10pF			100	ns

Note 1: All specifications are 100% tested at T_A = +25°C. Specification limits over temperature (T_A = T_{MIN} to T_{MAX}) are guaranteed by design and characterization, not production tested.

Note 2: Guaranteed by design. Not production tested.

Typical Operating Characteristics

(V_{CC} = +3.3V, T_A = +25°C, unless otherwise noted.)

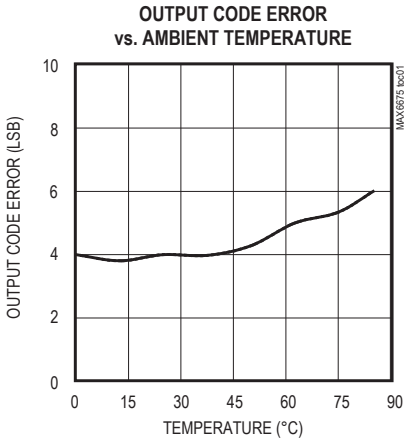

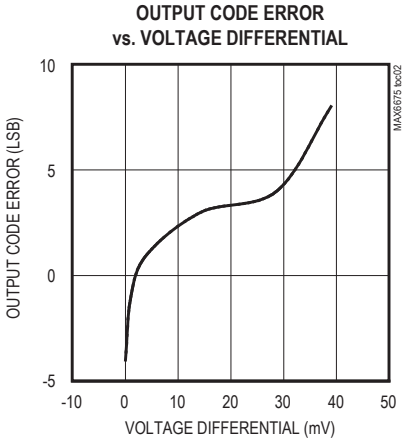

Pin Description

PIN	NAME	FUNCTION
1	GND	Ground
2	T-	Alumel Lead of Type-K Thermocouple. Should be connected to ground externally.
3	T+	Chromel Lead of Type-K Thermocouple
4	V_{CC}	Positive Supply. Bypass with a 0.1µF capacitor to GND.
5	SCK	Serial Clock Input
6	$\overline{CS}$	Chip Select. Set $\overline{CS}$ low to enable the serial interface.
7	SO	Serial Data Output
8	N.C.	No Connection

Detailed Description

The MAX6675 is a sophisticated thermocouple-to-digital converter with a built-in 12-bit analog-to-digital converter (ADC). The MAX6675 also contains cold-junction compensation sensing and correction, a digital controller, an SPI-compatible interface, and associated control logic.

The MAX6675 is designed to work in conjunction with an external microcontroller (µC) or other intelligence in thermostatic, process-control, or monitoring applications.

Temperature Conversion

The MAX6675 includes signal-conditioning hardware to convert the thermocouple's signal into a voltage compatible with the input channels of the ADC. The T+and T- inputs connect to internal circuitry that reduces the introduction of noise errors from the thermocouple wires.

Before converting the thermoelectric voltages into equivalent temperature values, it is necessary to compensate for the difference between the thermocouple cold-junction side (MAX6675 ambient temperature) and a 0°C virtual reference. For a type-K thermocouple, the voltage changes by 41µV/°C, which approximates the thermocouple characteristic with the following linear equation:

$$V_{OUT} = (41\mu V / °C) \times (T_R - T_{AMB})$$

Where:

V_{OUT} is the thermocouple output voltage (µV).

T_R is the temperature of the remote thermocouple junction (°C).

T_{AMB} is the ambient temperature (°C).

Cold-Junction Compensation

The function of the thermocouple is to sense a difference in temperature between two ends of the thermocouple wires. The thermocouple's hot junction can be read from 0°C to +1023.75°C. The cold end (ambient temperature of the board on which the MAX6675 is mounted) can only range from -20°C to +85°C. While the temperature at the cold end fluctuates, the MAX6675 continues to accurately sense the temperature difference at the opposite end.

The MAX6675 senses and corrects for the changes in the ambient temperature with cold-junction compensation. The device converts the ambient temperature reading into a voltage using a temperature-sensing diode. To make the actual thermocouple temperature measurement, the MAX6675 measures the voltage from the thermocouple's output and from the sensing diode. The device's internal circuitry passes the diode's voltage (sensing ambient temperature) and thermocouple voltage (sensing remote temperature minus ambient temperature) to the conversion function stored in the ADC to calculate the thermocouple's hot-junction temperature.

Optimal performance from the MAX6675 is achieved when the thermocouple cold junction and the MAX6675 are at the same temperature. Avoid placing heat-generating devices or components near the MAX6675 because this may produce cold-junction-related errors.

Digitization

The ADC adds the cold-junction diode measurement with the amplified thermocouple voltage and reads out the 12-bit result onto the SO pin. A sequence of all zeros means the thermocouple reading is 0°C. A sequence of all ones means the thermocouple reading is +1023.75°C.

Applications Information

Serial Interface

The T*ypical Application Circuit* shows the MAX6675 interfaced with a microcontroller. In this example, the MAX6675 processes the reading from the thermocouple and transmits the data through a serial interface. Force $\overline{CS}$ low and apply a clock signal at SCK to read the results at SO. Forcing $\overline{CS}$ low immediately stops any conversion process. Initiate a new conversion process by forcing $\overline{CS}$ high.

Force $\overline{CS}$ low to output the first bit on the SO pin. A complete serial interface read requires 16 clock cycles. Read the 16 output bits on the falling edge of the clock. The first bit, D15, is a dummy sign bit and is always zero. Bits D14–D3 contain the converted temperature in the order of MSB to LSB. Bit D2 is normally low and goes high when the thermocouple input is open. D1 is low to provide a device ID for the MAX6675 and bit D0 is three-state.

Figure 1a is the serial interface protocol and Figure 1b shows the serial interface timing. Figure 2 is the SO output.

Open Thermocouple

Bit D2 is normally low and goes high if the thermocouple input is open. In order to allow the operation of the open thermocouple detector, T- must be grounded. Make the ground connection as close to the GND pin as possible.

Noise Considerations

The accuracy of the MAX6675 is susceptible to power-supply coupled noise. The effects of power-supply noise can be minimized by placing a 0.1µF ceramic bypass capacitor close to the supply pin of the device.

Thermal Considerations

Self-heating degrades the temperature measurement accuracy of the MAX6675 in some applications. The magnitude of the temperature errors depends on the thermal conductivity of the MAX6675 package, the mounting technique, and the effects of airflow. Use a large ground plane to improve the temperature measurement accuracy of the MAX6675.

The accuracy of a thermocouple system can also be improved by following these precautions:

- Use the largest wire possible that does not shunt heat away from the measurement area.
- If small wire is required, use it only in the region of the measurement and use extension wire for the region with no temperature gradient.
- Avoid mechanical stress and vibration, which could strain the wires.
- When using long thermocouple wires, use a twisted-pair extension wire.
- Avoid steep temperature gradients.
- Try to use the thermocouple wire well within its temperature rating.
- Use the proper sheathing material in hostile environments to protect the thermocouple wire.
- Use extension wire only at low temperatures and only in regions of small gradients.
- Keep an event log and a continuous record of thermocouple resistance.

Reducing Effects of Pick-Up Noise

The input amplifier (A1) is a low-noise amplifier designed to enable high-precision input sensing. Keep the thermocouple and connecting wires away from electrical noise sources.

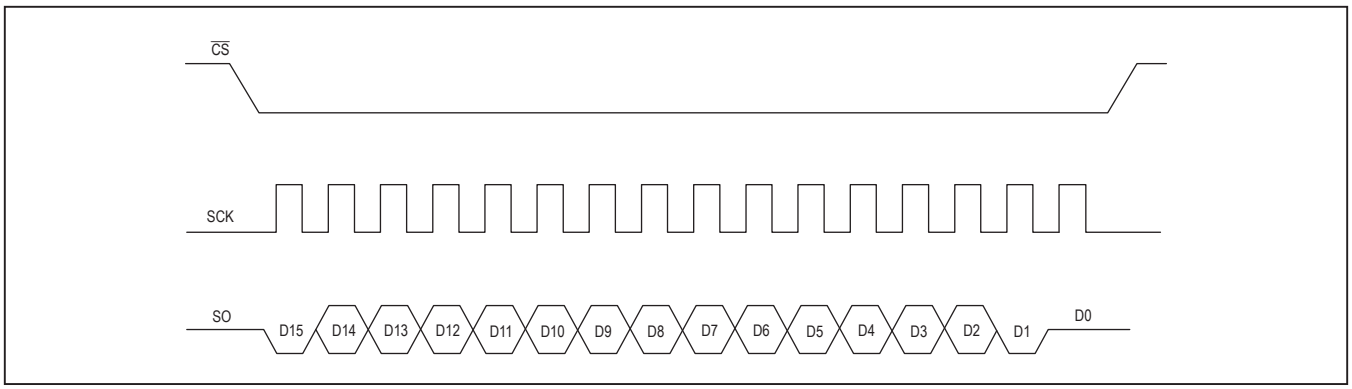

Figure 1a. Serial Interface Protocol

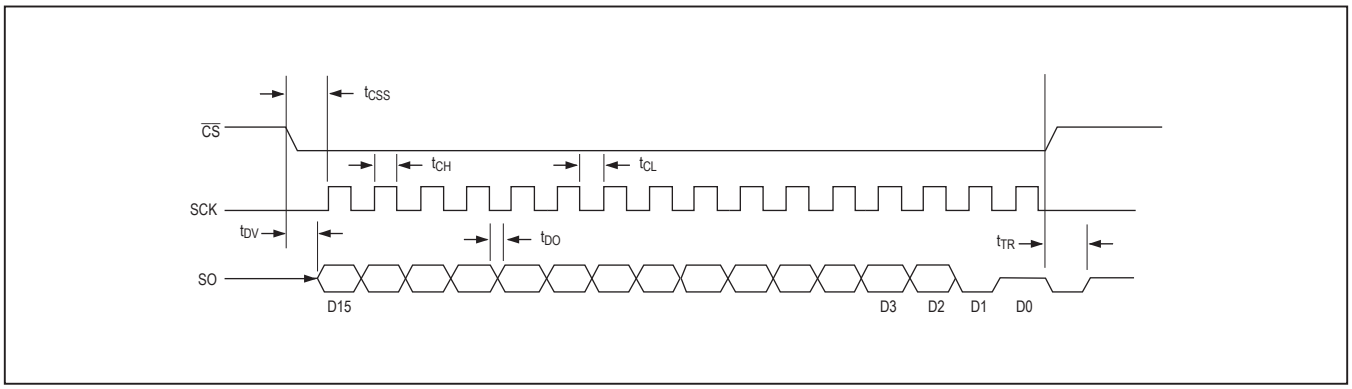

Figure 1b. Serial Interface Timing

BIT	DUMMY SIGN BIT	12-BIT TEMPERATURE READING												THERMOCOUPLE INPUT	DEVICE ID	STATE
Bit	15	14	13	12	11	10	9	8	7	6	5	4	3	2	1	0
	0	MSB											LSB		0	Three-state

Figure 2. SO Output

Block Diagram

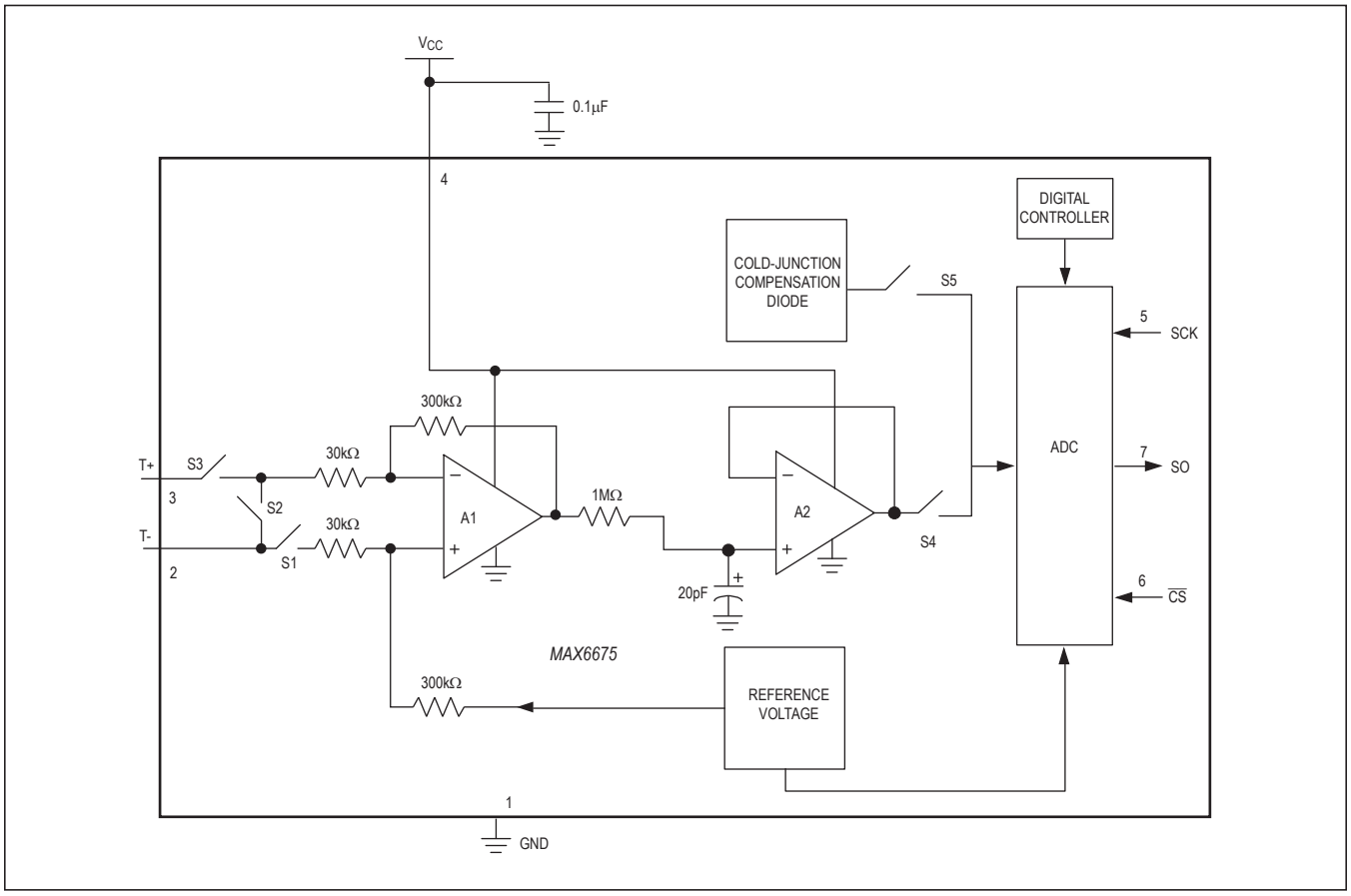

Chip Information

TRANSISTOR COUNT: 6720
PROCESS: BiCMOS

Package Information

For the latest package outline information and land patterns (footprints), go to **www.maximintegrated.com/packages**. Note that a "+", "#", or "-" in the package code indicates RoHS status only. Package drawings may show a different suffix character, but the drawing pertains to the package regardless of RoHS status.

PACKAGE TYPE	PACKAGE CODE	OUTLINE NO.	LAND PATTERN NO.
8 SO	S8+2	21-0041	90-0096

Revision History

REVISION NUMBER	REVISION DATE	DESCRIPTION	PAGES CHANGED
2	4/14	Removed automotive reference	1
3	6/21	Updated equation in *Temperature Compensation* section.	4

For pricing, delivery, and ordering information, please visit Maxim Integrated's online storefront at https://www.maximintegrated.com/en/storefront/storefront.html.

Maxim Integrated cannot assume responsibility for use of any circuitry other than circuitry entirely embodied in a Maxim Integrated product. No circuit patent licenses are implied. Maxim Integrated reserves the right to change the circuitry and specifications without notice at any time. The parametric values (min and max limits) shown in the Electrical Characteristics table are guaranteed. Other parametric values quoted in this data sheet are provided for guidance.

Maxim Integrated and the Maxim Integrated logo are trademarks of Maxim Integrated Products, Inc. © 2021 Maxim Integrated Products, Inc.