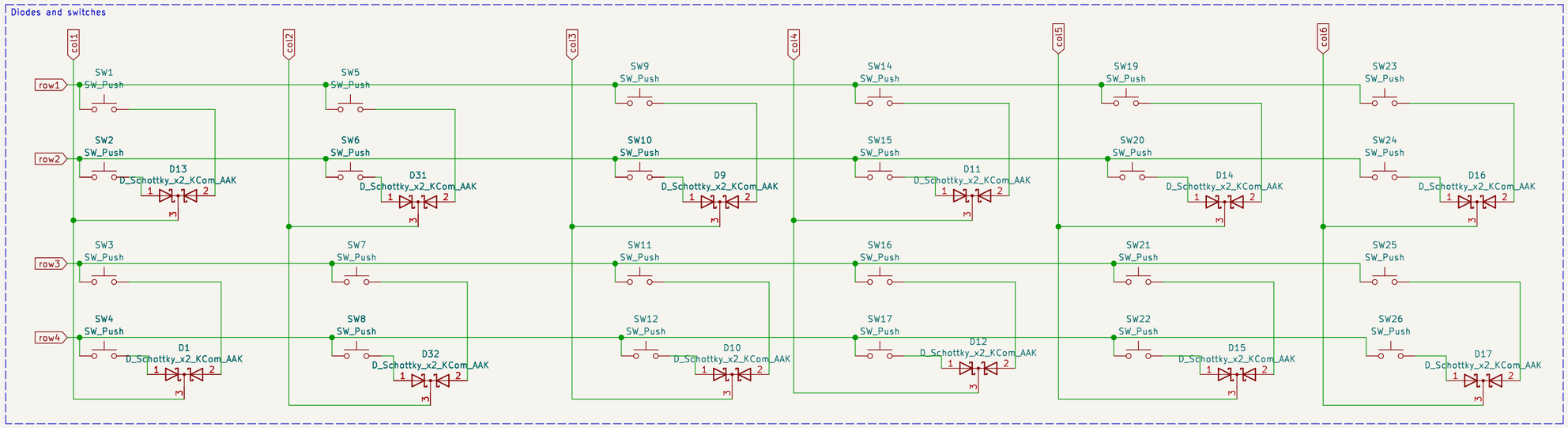

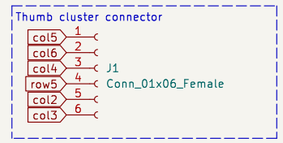

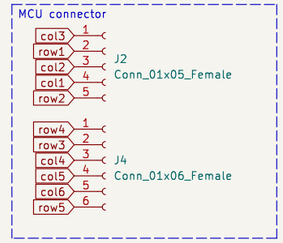

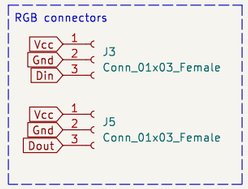

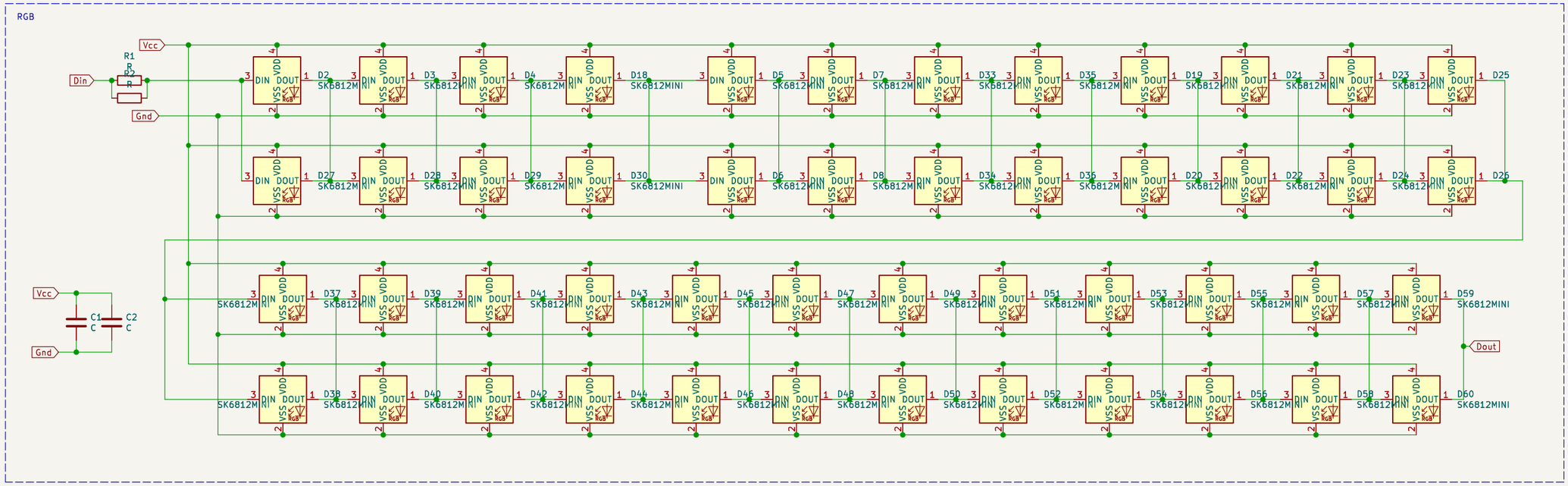

Copyright Quentin Lebastard 2022
CC BY-NC-SA 4.0

bastard keyboards

Sheet: /
File: flex.kicad_sch

Title: flex.sch

Size: A3	Date: 2022-02-20	**Rev:**
KiCad E.D.A. 8.0.2		Id: 1/1