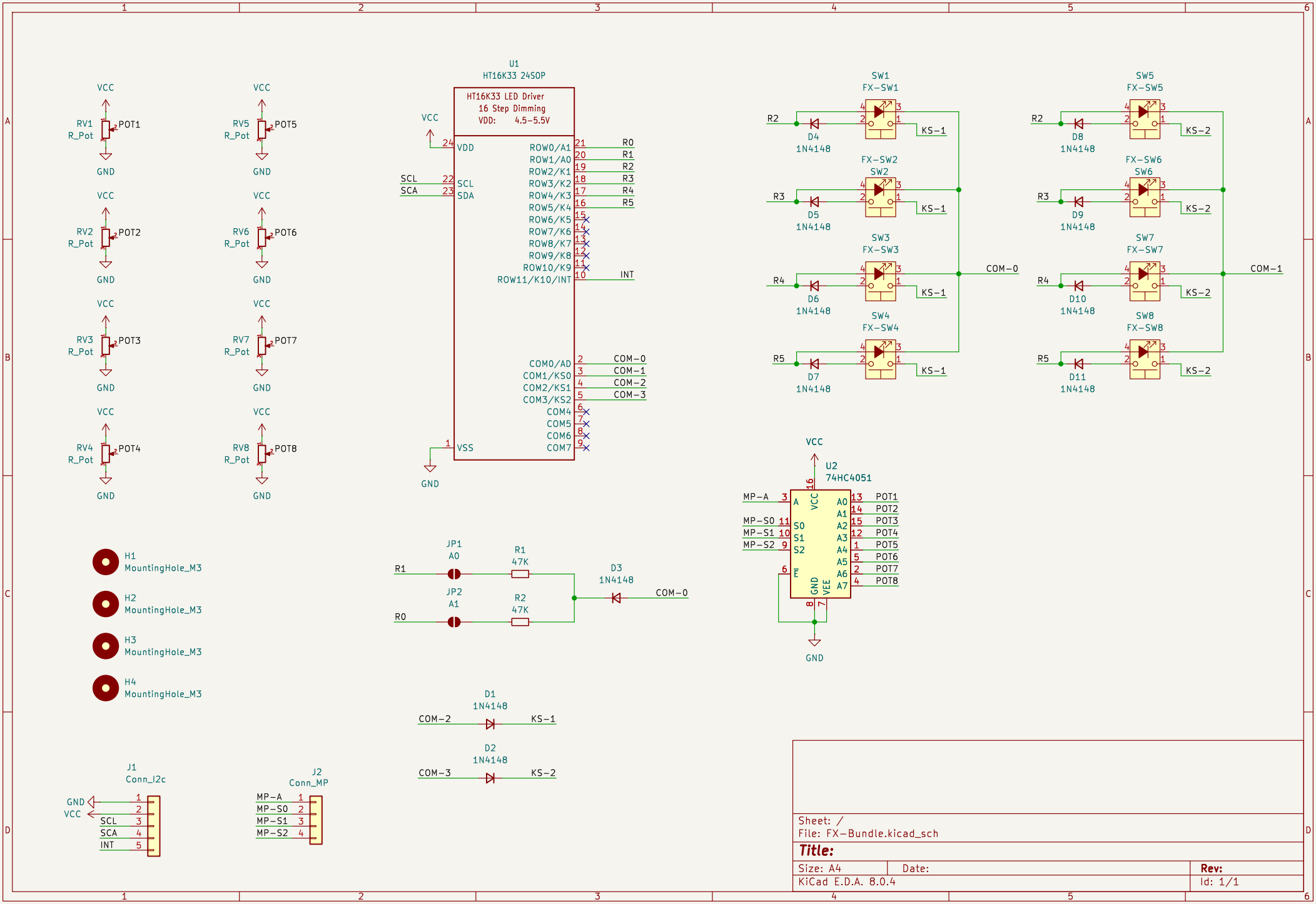
U1
HT16K33 24SOP
HT16K33 LED Driver
16 Step Dimming
VDD: 4.5-5.5V
VDD
SCL
SDA
VSS
ROW0/A1
ROW1/A0
ROW2/K1
ROW3/K2
ROW4/K3
ROW5/K4
ROW6/K5
ROW7/K6
ROW8/K7
ROW9/K8
ROW10/K9
ROW11/K10/INT
COM0/AD
COM1/KS0
COM2/KS1
COM3/KS2
COM4
COM5
COM6
COM7
INT
R0
R1
R2
R3
R4
R5
COM-0
COM-1
COM-2
COM-3
VCC
GND
RV1 R_Pot POT1
RV2 R_Pot POT2
RV3 R_Pot POT3
RV4 R_Pot POT4
RV5 R_Pot POT5
RV6 R_Pot POT6
RV7 R_Pot POT7
RV8 R_Pot POT8
SW1 FX-SW1
SW2 FX-SW2
SW3 FX-SW3
SW4 FX-SW4
SW5 FX-SW5
SW6 FX-SW6
SW7 FX-SW7
SW8 FX-SW8
D4 1N4148
D5 1N4148
D6 1N4148
D7 1N4148
D8 1N4148
D9 1N4148
D10 1N4148
D11 1N4148
KS-1
KS-2
U2
74HC4051
MP-A
MP-S0
MP-S1
MP-S2
A
S0
S1
S2
E
A0
A1
A2
A3
A4
A5
A6
A7
POT1
POT2
POT3
POT4
POT5
POT6
POT7
POT8
JP1 A0
JP2 A1
R1 47K
R2 47K
D3 1N4148
D1 1N4148
D2 1N4148
H1 MountingHole_M3
H2 MountingHole_M3
H3 MountingHole_M3
H4 MountingHole_M3
J1 Conn_I2c
J2 Conn_MP
Sheet: /
File: FX-Bundle.kicad_sch
Title:
Size: A4
Date:
Rev:
KiCad E.D.A. 8.0.4
Id: 1/1