Canon

X-07

HAND HELD COMPUTER

■ TECHNICAL GUIDE

■ PARTS CATALOG

ENGLISH

CONTENTS

Page

1. Release of Cover I
2. Attach the Flat Cables for Repair 1
3. Folding of Flat Cable 2
4. Parts Catalog 3
5. Block Diagram 7
6. Power Supply Circuit 8
7. Self-check of CCU 9
8. General Troubleshoot 11
9. X07 Circuit Diagram 13
   - 9-1) CCU Board 14
   - 9-2) CPU Board 23
   - 9-3) Memory Board Circuit Diagram 33
10. IC & TR Terminals 38
11. Option Technical Guide & Parts Catalog 41
   - 11-1) XM-100, XP-110, XP-120 43
   - 11-2) Optical Coupler X-721 49
   - 11-3) RS232-C Level Converter X-722 57
   - 11-4) Color Graphic Printer X-710 67
12. Cable for Option 80
13. Test Program 83

1. RELEASE of COVER

(1) Loosen 3 screws S6

(2) Push ⓐ part of Lower cover and release the hook or Upper cover.

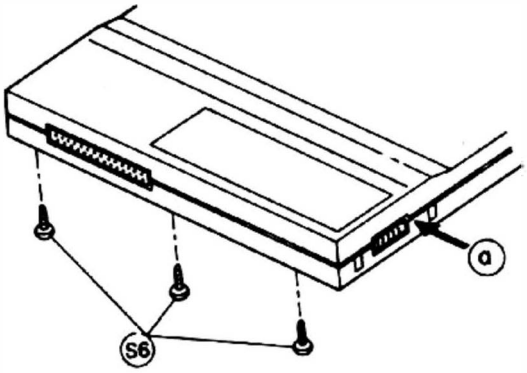

(3) Push ⓑ part of Lower cover.

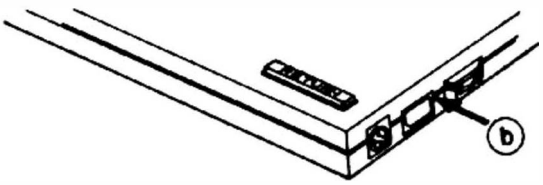

(4) Slide Upper cover.

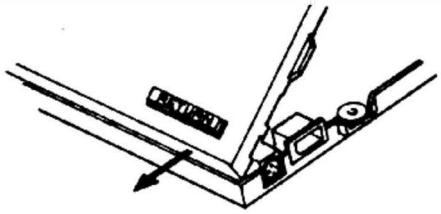

(5) Loosen two screws S2 and remove insulation plate Ⓐ & shield plate Ⓑ of CCU board.

(6) Loosen screw Ⓒ and lift CPU board.

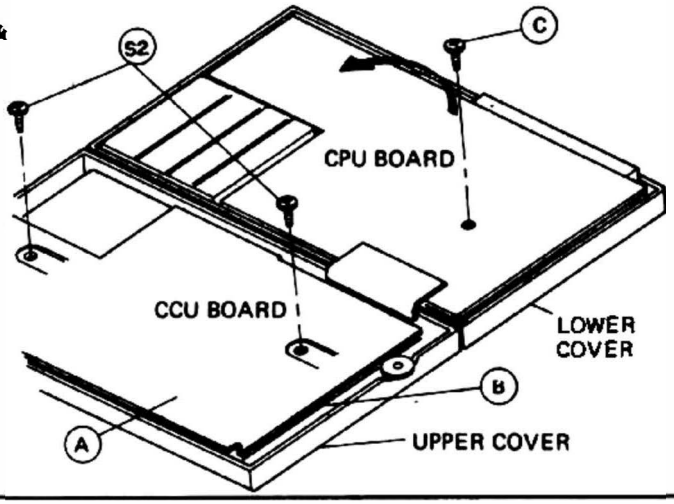

2. ATTACH the FLAT CABLES for REPAIR

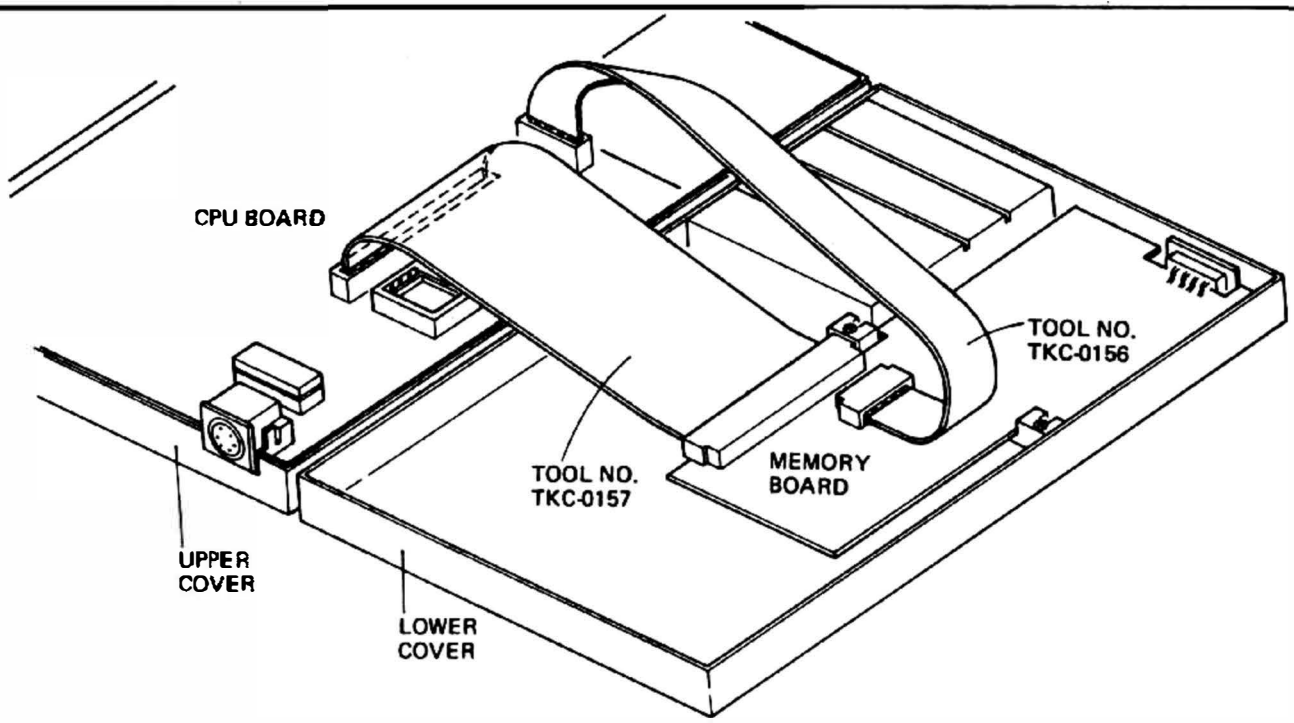

3. FOLDING OF FLAT CABLE

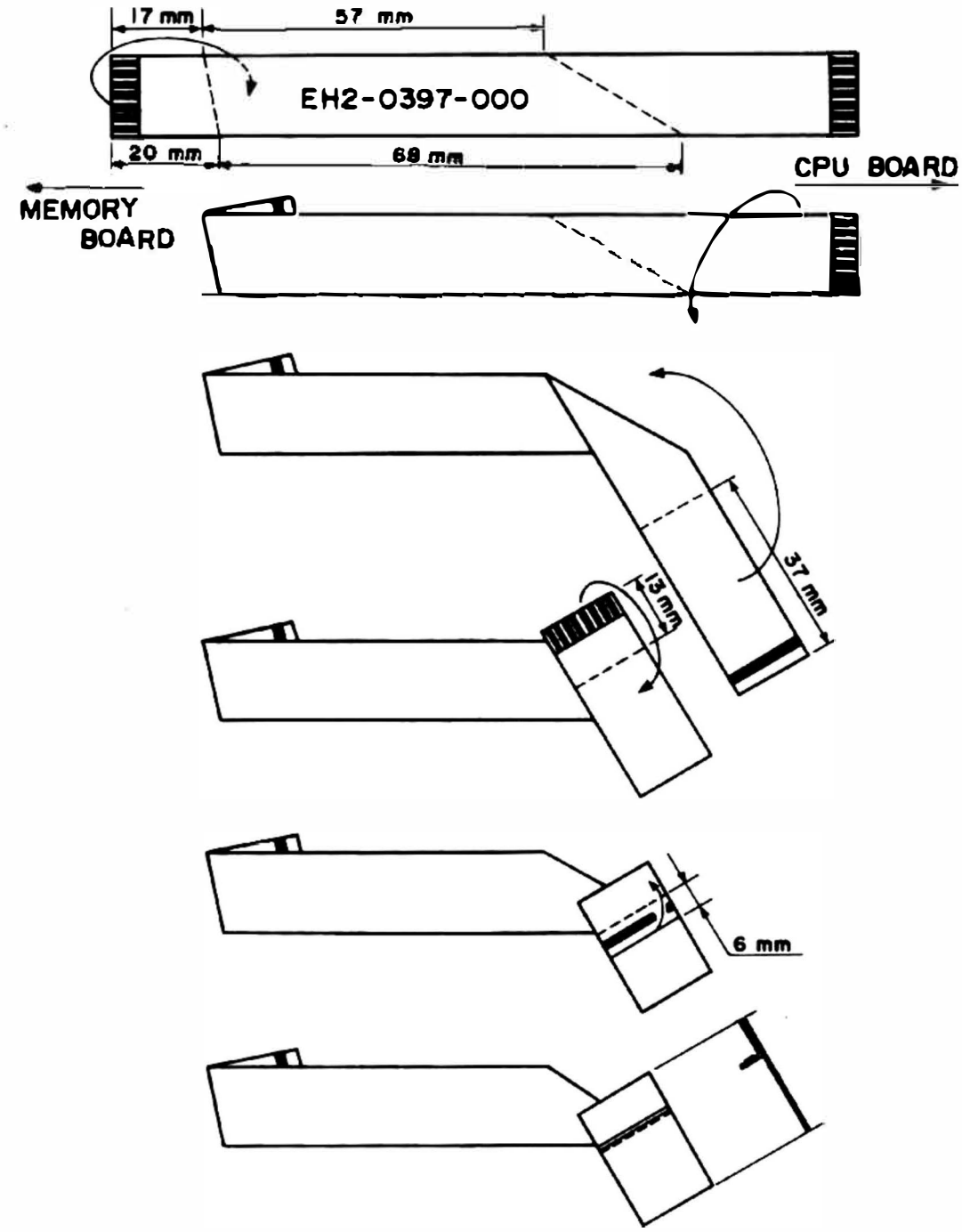

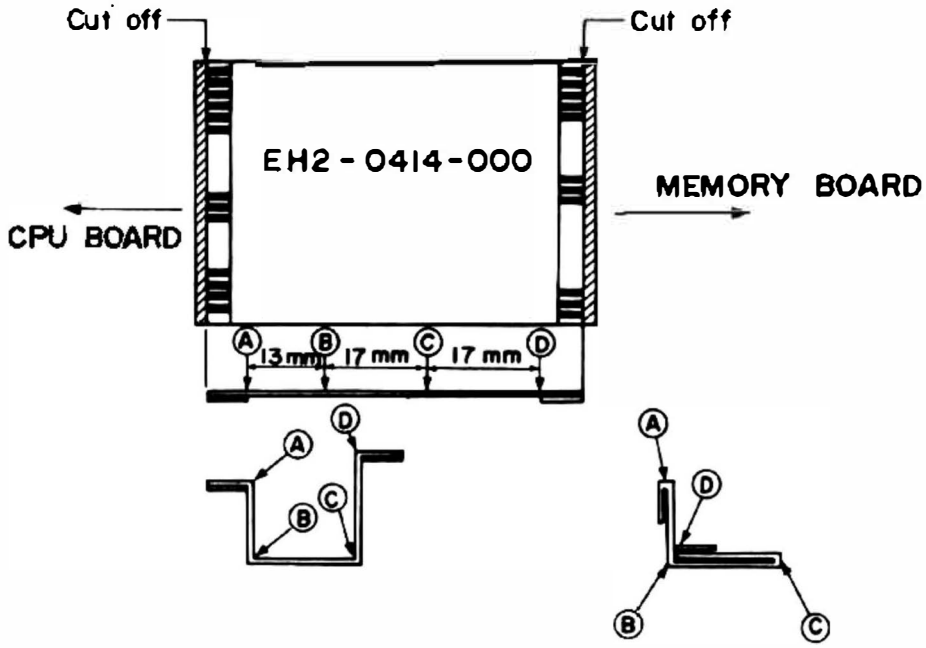

4. PARTS CATALOG

EXPLODED VIEW

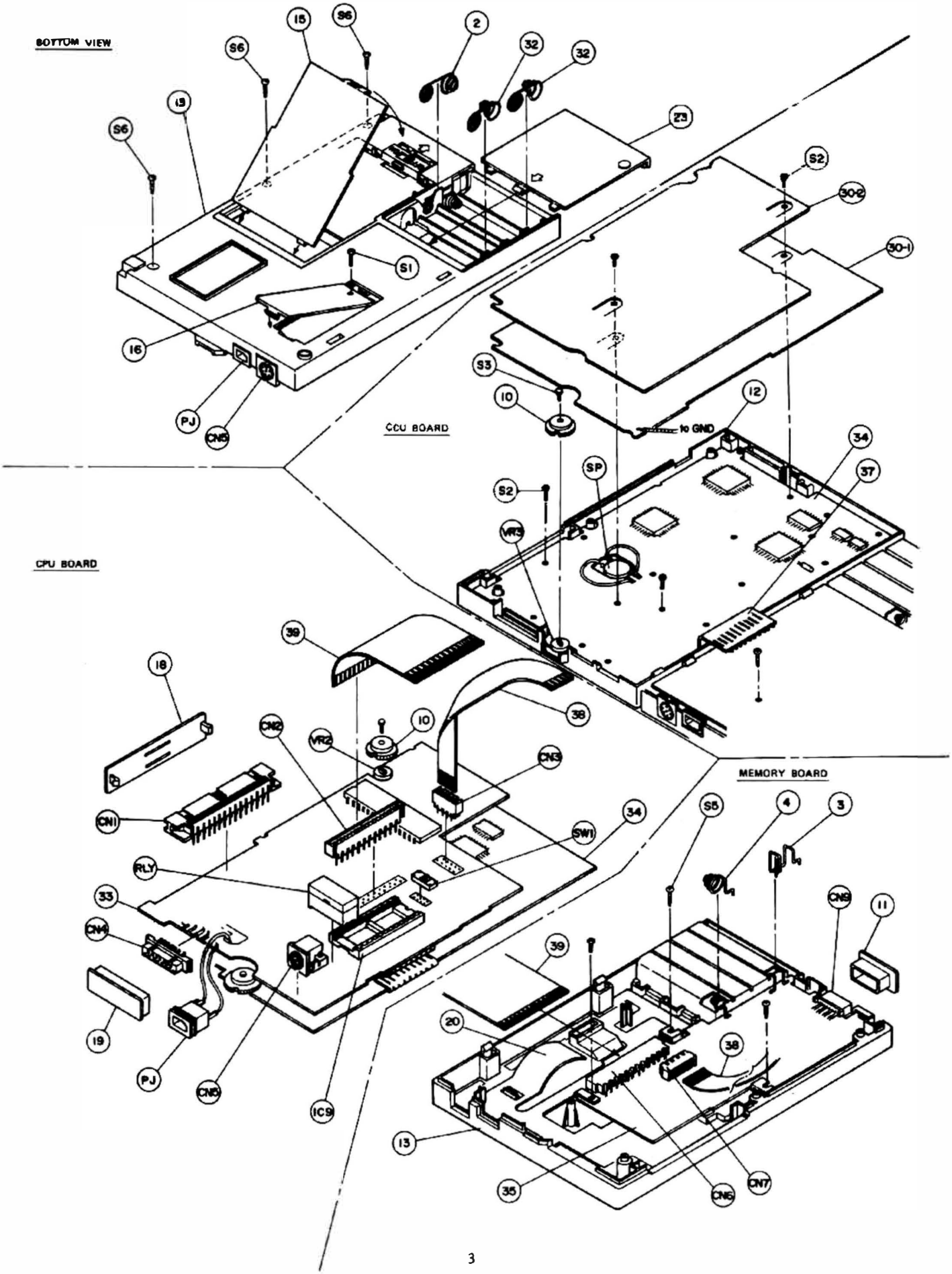

CCU BOARD-LCD

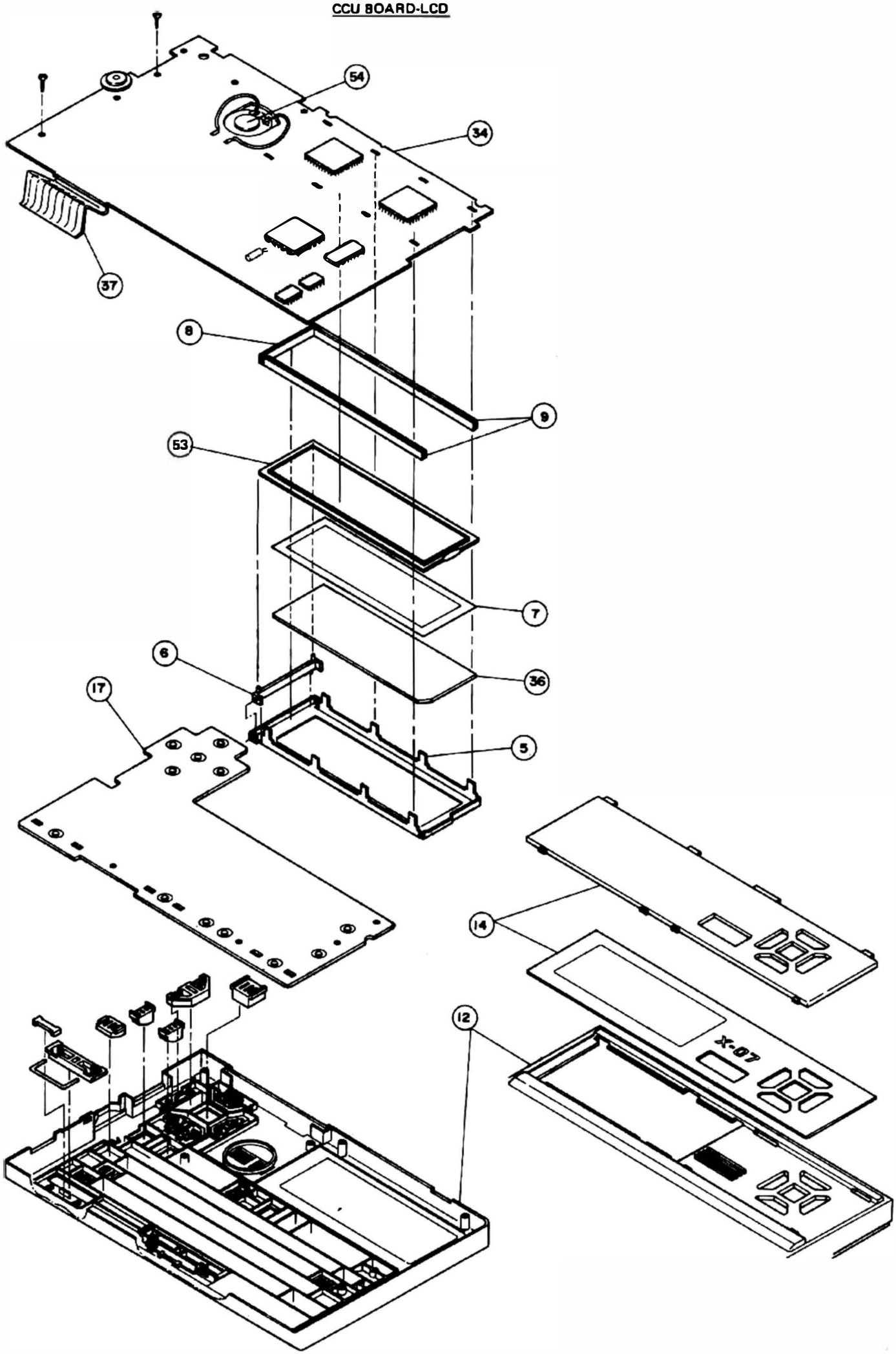

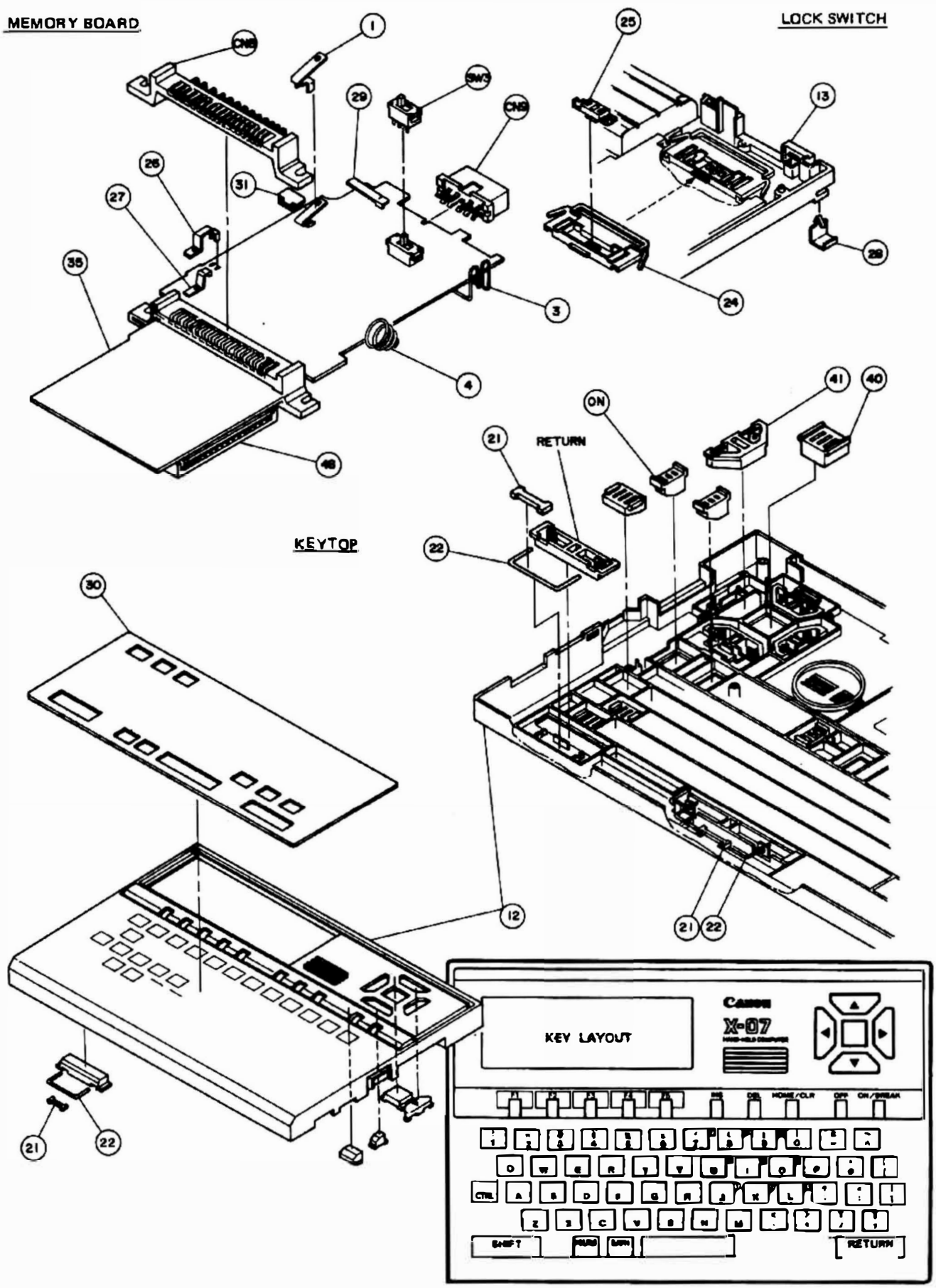
MEMORY BOARD
LOCK SWITCH
KEYTOP
RETURN
ON
KEY LAYOUT
Canon
X-07
HOME/CLR
ON/BREAK
CTRL
SHIFT
RETURN

N	KEY NO.	PART NO.	Q'TY	DESCRIPTION		REMARKS	PRICE	
	1	EA1-2731-000	1	SPRING,RESET				
	2	EA1-3750-000	1	TERMINAL,BATTERY, C1				
	3	EA1-4560-000	1	TERMINAL (+)				
	4	EA1-4561-000	1	TERMINAL (-)				
	5	EA1-4858-000	1	HOLDER,LCD				
	6	EA1-4861-000	1	BAR,SET LCD				
	7	EA1-4862-000	1	SPACER,LCD				
	8	EA1-4863-000	1	CONNECTOR (A),CONDUCTIVE RUBBER				
	9	EA1-4864-000	2	CONNECTOR (B),CONDUCTIVE RUBBER				
	10	EA1-4865-000	2	KNOB,VARIABLE RESISTOR				
	11	EA1-4866-000	1	CAP,CONNECTOR				
*	12	EA1-5038-000	1	UPPER COVER				
*	13	EA1-5040-000	1	LOWER COVER				
*	14	EA1-5041-000	1	ACRYL,INDICATOR (DOM.)				
*	15	EA1-5042-000	1	COVER,UTILITY CARD				
*	16	EA1-5043-000	1	COVER,ROM/RAM SOCKET				
*	17	EA1-5044-000	1	RUBBER PLATE, CONDUCTIVE	KEYBOARD			
*	18	EA1-5045-000	1	CAP(A),CONNECTOR				
*	19	EA1-5046-000	1	CAP(B),CONNECTOR				
*	20	EA1-5047-000	1	PLATE,SHIELD				
*	21	EA1-5048-000	3	KEY,ARM, SHIFT,SPACE,RETURN				
*	22	EA1-5051-000	3	LEVER(B)				
*	23	EA1-5052-000	1	COVER,BATTERY				
*	24	EA1-5116-000	1	KNOB,LOCK				
*	25	EA1-5117-000	1	KNOB,SWITCH				
*	26	EA1-5120-000	1	LEAF SPRING(A)				
*	27	EA1-5121-000	1	LEAF SPRING(B)				
*	28	EA1-5122-000	1	CONTACT(A),GND				
*	29	EA1-5123-000	1	CONTACT(B),GND				
*	30	EA1-5156-000	1	PLATE,KEYBOARD				
*	30-1	EA1-5335-000	1	PLATE,SHIELD,CCU BOARD				
*	30-2	EA1-5336-000	1	PLATE,INSULATION,CCU BOARD				
*	30-3	EA1-5340-000	1	ACRYL,INDICATOR (EXPORT)				

N	KEY NO.	PART NO.	Q'TY	DESCRIPTION		REMARKS	PRICE	
*	31	EA1-5342-000	1	CONTACT				
*		EA1-8082-000	1	HARD CASE,X-07				
	32	EA9-0119-000	2	TERMINAL,BATTERY(C2)				
*	33	EH1-0669-000	1	PCB,CPU BOARD				
*	34	EH1-0670-000	1	PCB,CCU BOARD(KEYBOARD)				
*	35	EH1-0671-000	1	PCB,MEMORY BOARD				
	36	EH2-0387-000	1	ACRYL,FILTER,LCD				
*	37	EH2-0395-000	1	FLAT CABLE,19P				
*	38	EH2-0397-000	1	FLAT CABLE,12P				
*	39	EH2-0414-000	1	FLAT CABLE,34P				
*	40	ES2-2185-000	1	KEYTOP,GRAY,F6				
*		ES2-2186-000	1	KEYTOP,SPACE				
*		ES2-2187-000	1	KEYTOP,SHIFT				
*		ES2-2188-000	1	KEYTOP,RETURN				
*	41	ES2-2189-000	4	KEYTOP,CURSOLE				
*		ES2-2190-000	5	KEYTOP,BLUE,F1～F5				
*		ES2-2266-000	4	KEYTOP,LIGHT GRAY,INS,OFF,DEL,CLR				
*		ES2-2267-000	1	KEYTOP,BROWN,ON/BRK				
*	A	ES9-5202-000	1	KEYTOP SET(EXP.),1,2,3,4,5,6,A BCDEFGNQRSTVWXYZ,CTRL				
*	B	ES9-5203-000	1	KEYTOP SET(EXP.),7,8,9,0,HIJKLMOPU ?,+,*,=,<,>, #				
*		ES9-5204-000	1	KEYTOP SET(EXP.),NUMx12,GRPHx12				
*	C	ES9-5205-000	1	KEYTOP SET(DOM.),1,2,3,4,5,6,A BCDEFGNQRSTVWXYZ,CTRL				
*	D	ES9-5206-000	1	KEYTOP SET(DOM.),7,8,9,0,HIJKLMOPU ?,+,*,=,<,>, #				
*		ES9-5207-000	1	KEYTOP SET(DOM.),カナx12,GRPHx12				
	S1	XA9-0113-000	1	SCREW, TAPPING M2x5, +/-				
	S2	XA9-0154-000	19	SCREW, TAPPING M2x4 ,				
	S3	XA1-7140-305	2	SCREW 1.4x3				
	S4	XB3-1260-607	2	SCREW, TAPPING 2.6x6				
	S5	XB3-1261-007	2	SCREW, TAPPING 2.6x10				
	S6	XB3-1261-207	3	SCREW, TAPPING 2.6x12				

5. BLOCK DIAGRAM

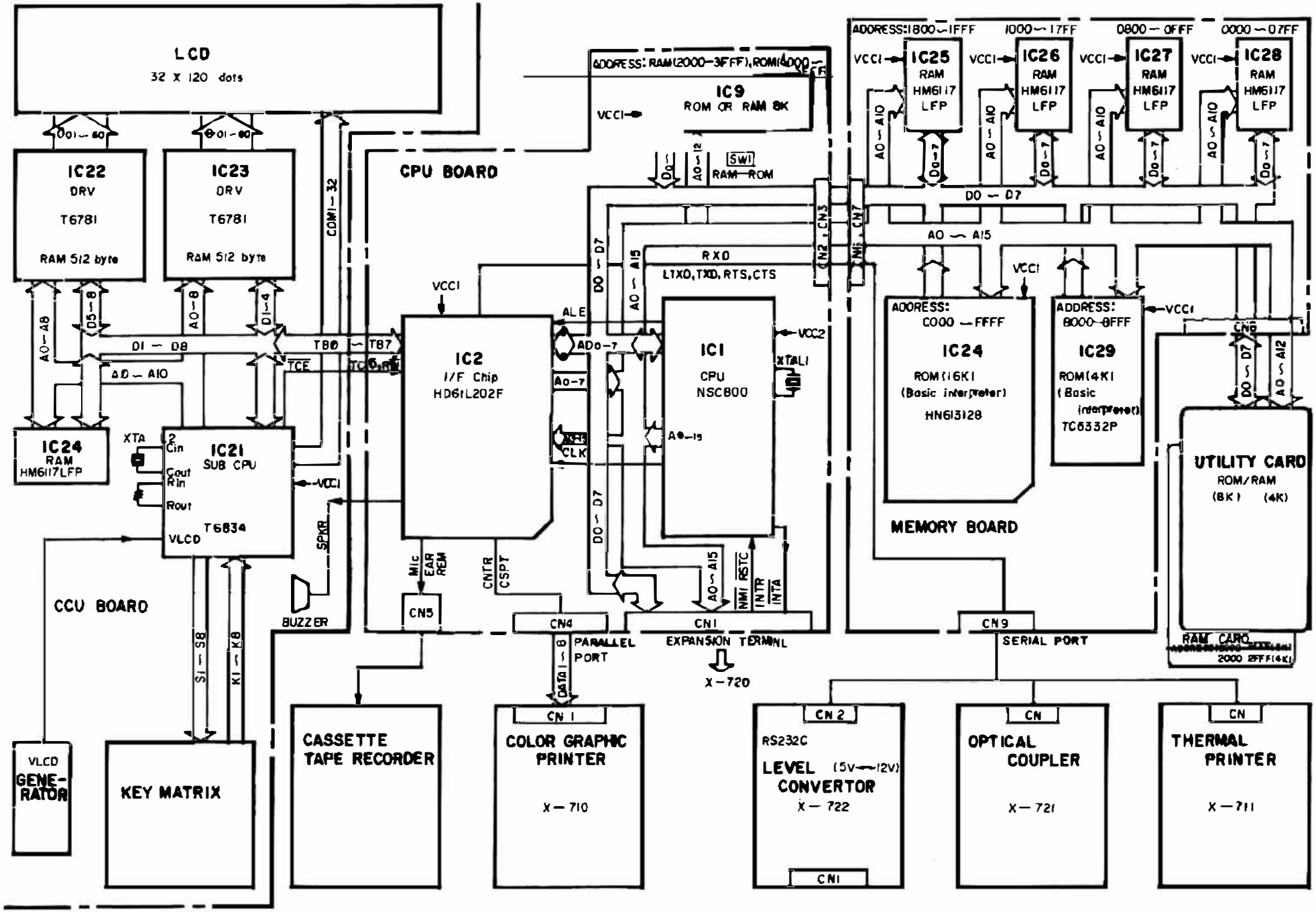

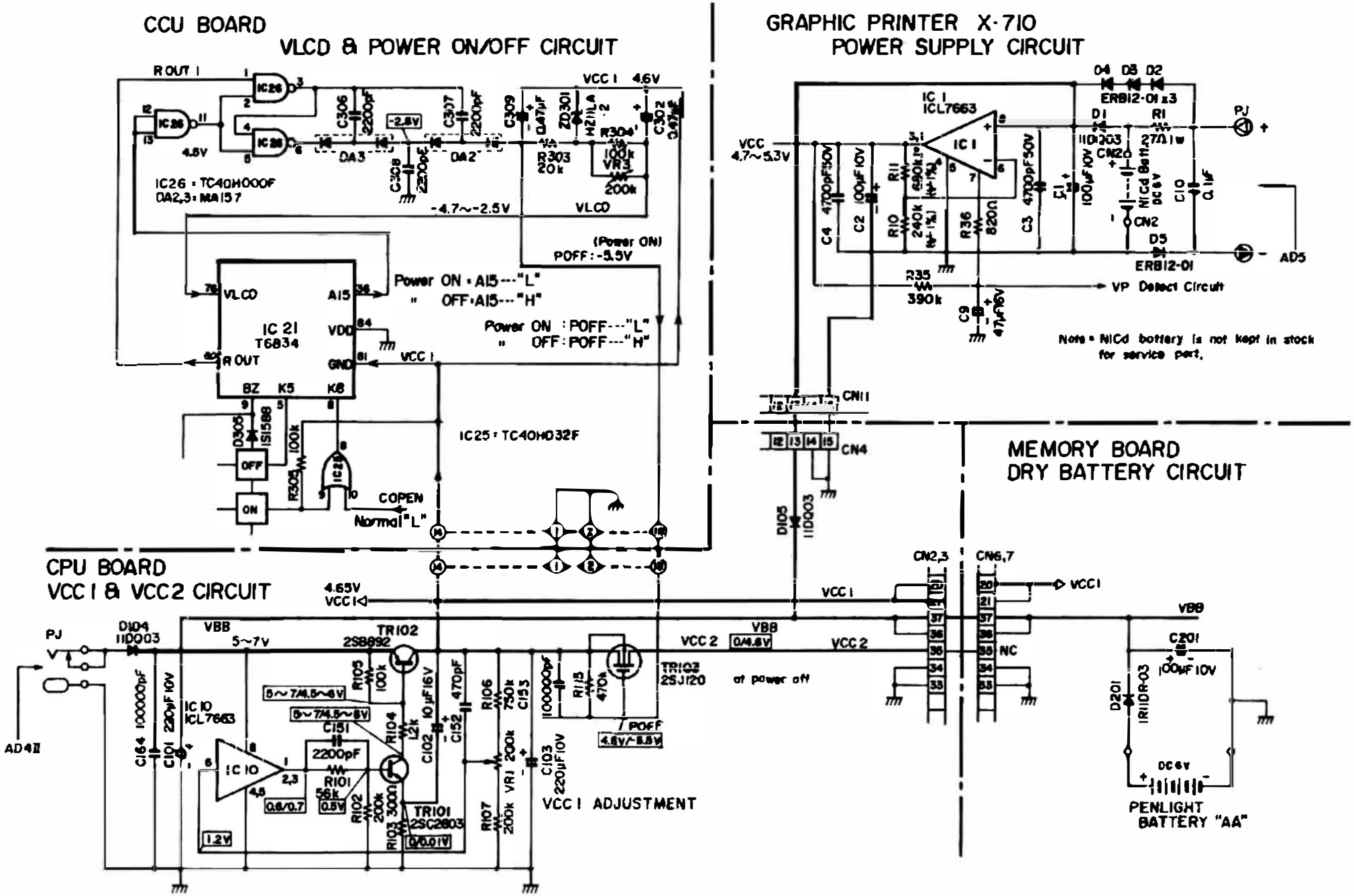
CCU BOARD
VLCD & POWER ON/OFF CIRCUIT
GRAPHIC PRINTER X-710
POWER SUPPLY CIRCUIT
IC26 : TC40H000F
DA2,3 : MA157
IC 21
T6834
IC25 : TC40H032F
Power ON : A15---"L"
" OFF : A15---"H"
Power ON : POFF---"L"
" OFF : POFF---"H"
(Power ON)
POFF : -5.5V
-4.7~-2.5V
VLCD
VCC 1 4.6V
IC 1
ICL7663
ERB12-01 x3
ERB12-01
VP Detect Circuit
Note : NiCd battery is not kept in stock for service part.
MEMORY BOARD
DRY BATTERY CIRCUIT
CPU BOARD
VCC 1 & VCC 2 CIRCUIT
TR102
2SB892
TR101
2SC2803
TR102
2SJ120
at power off
VCC 1 ADJUSTMENT
PENLIGHT
BATTERY "AA"

7. SELF-CHECK OF CCU

1. Remove the utility card.	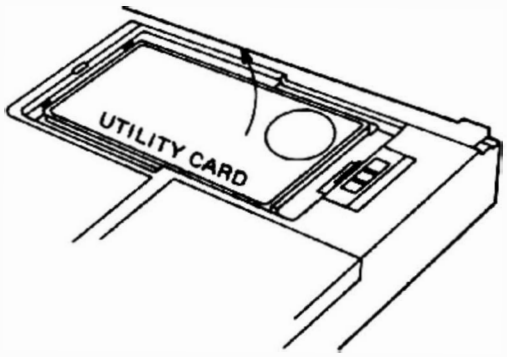
2. Set the LOCK switch of utility card to ON.	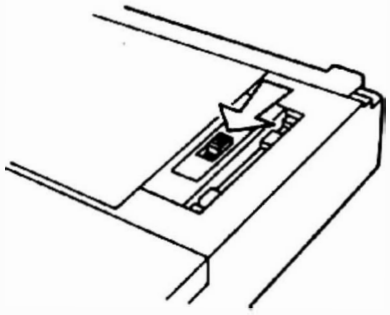
3. Press the RESET switch.	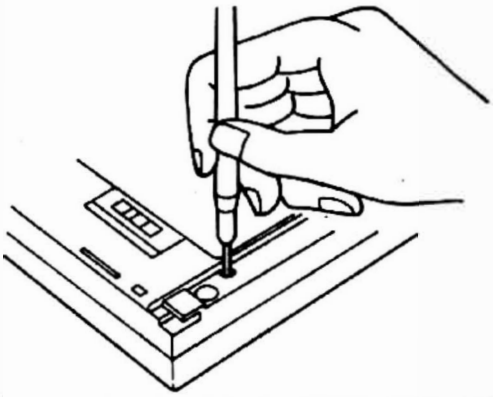
4. Press and hold down the CTRL, S, and H keys, then press the ON key. (If the ON key is pressed too long, an SRES signal is output and initial clearing is performed, disabling self-check.)	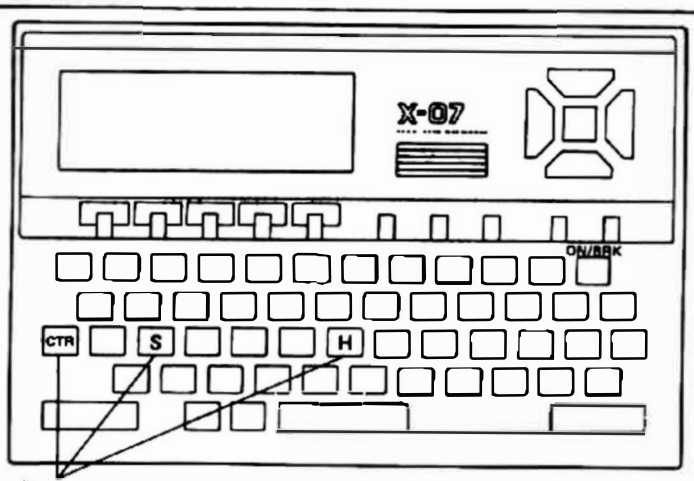 Pressed at the same time. Press the ON/BREAK key for a little while, while holding the CTRL, S, and H keys down.
5. Check the display. ..... 1 Check of sub-CPU on CCU board, driver, and display is performed automatically.	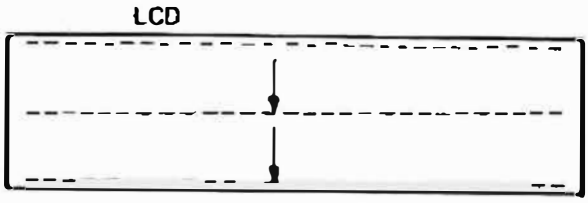

6. Check of display 2	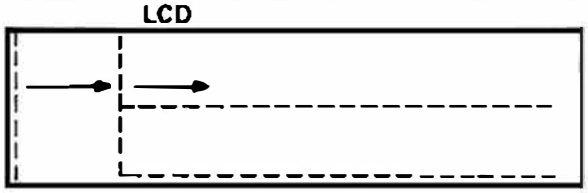
7. Nothing is displayed on the LCD after the display check is completed. * Check key input.	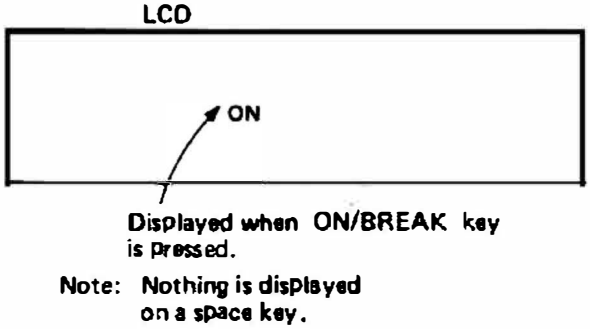
8. Self-check of the CCU board is released when the RESET switch on the bottom of the body is pressed.	

9. When self-check is possible, the CCU board is not faulty. If self-check is impossible, repair the CCU board referring to the CCU BOARD flowchart.

[Independent self-check of CCU board]

(1) Apply +4.6 V to the VCC1 terminal.

(2) Connect the COPEN signal to GND.

(3) Contact the KACL signal to VCC1, then separate. (This means that the RESET switch was pressed.)

(4) Execute items 4~9 of the self-check successively.

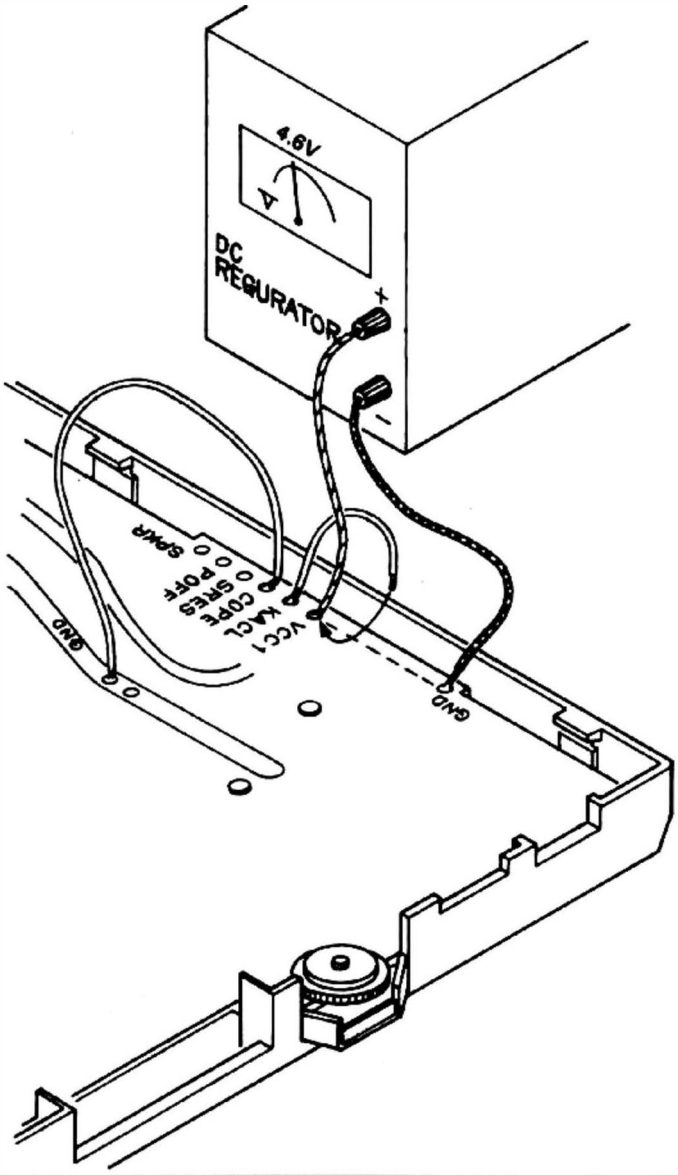

8. GENERAL TROUBLESHOOT

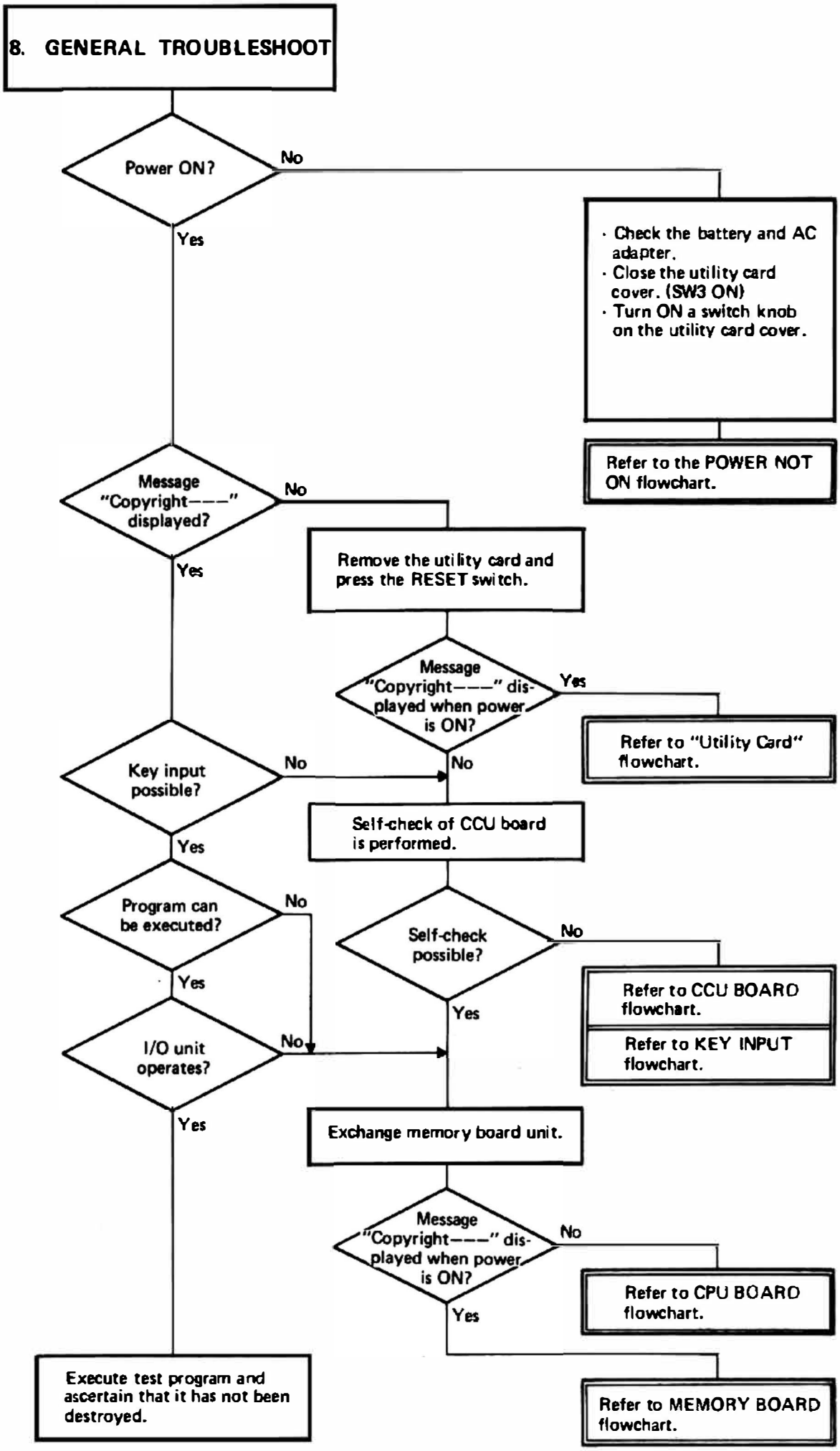

9. X-07

CIRCUIT DIAGRAM
TROUBLESHOOTING

9.1 CCU BOARD CIRCUIT DIAGRAM

9. X-07 CIRCUIT DIAGRAM

9-1) CCU Board

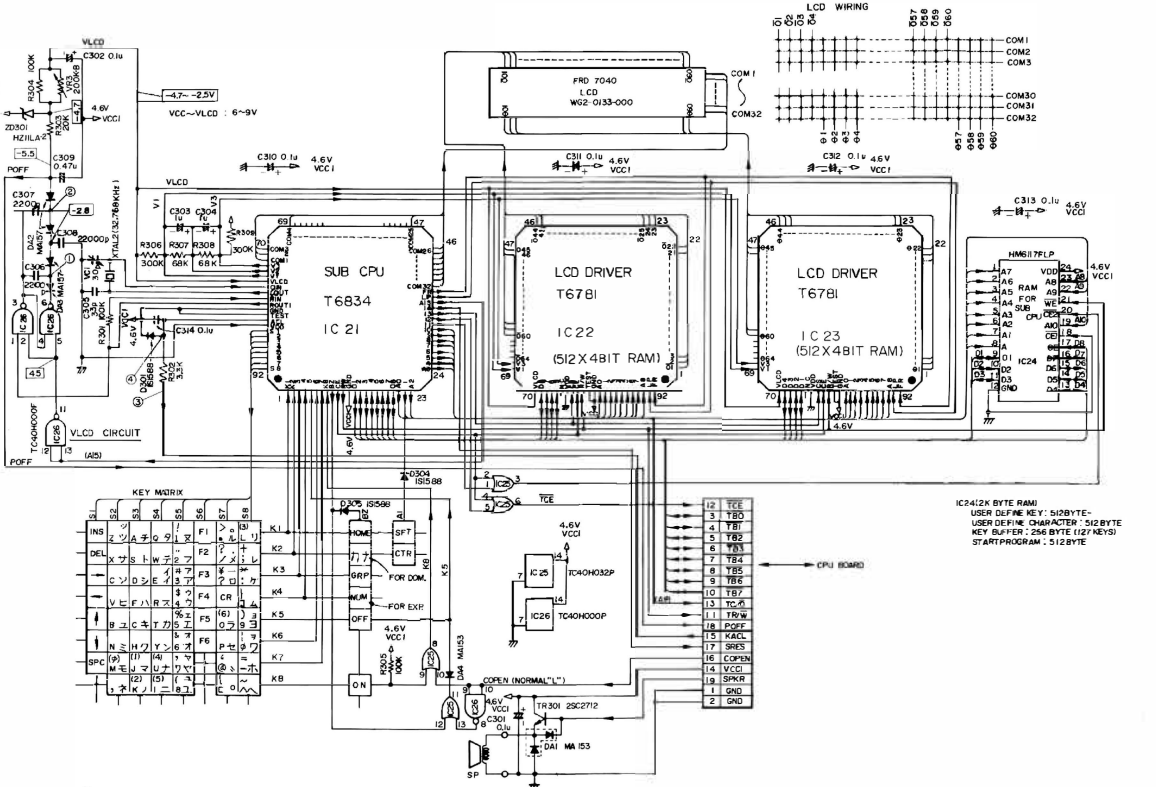

CARD LAYOUT

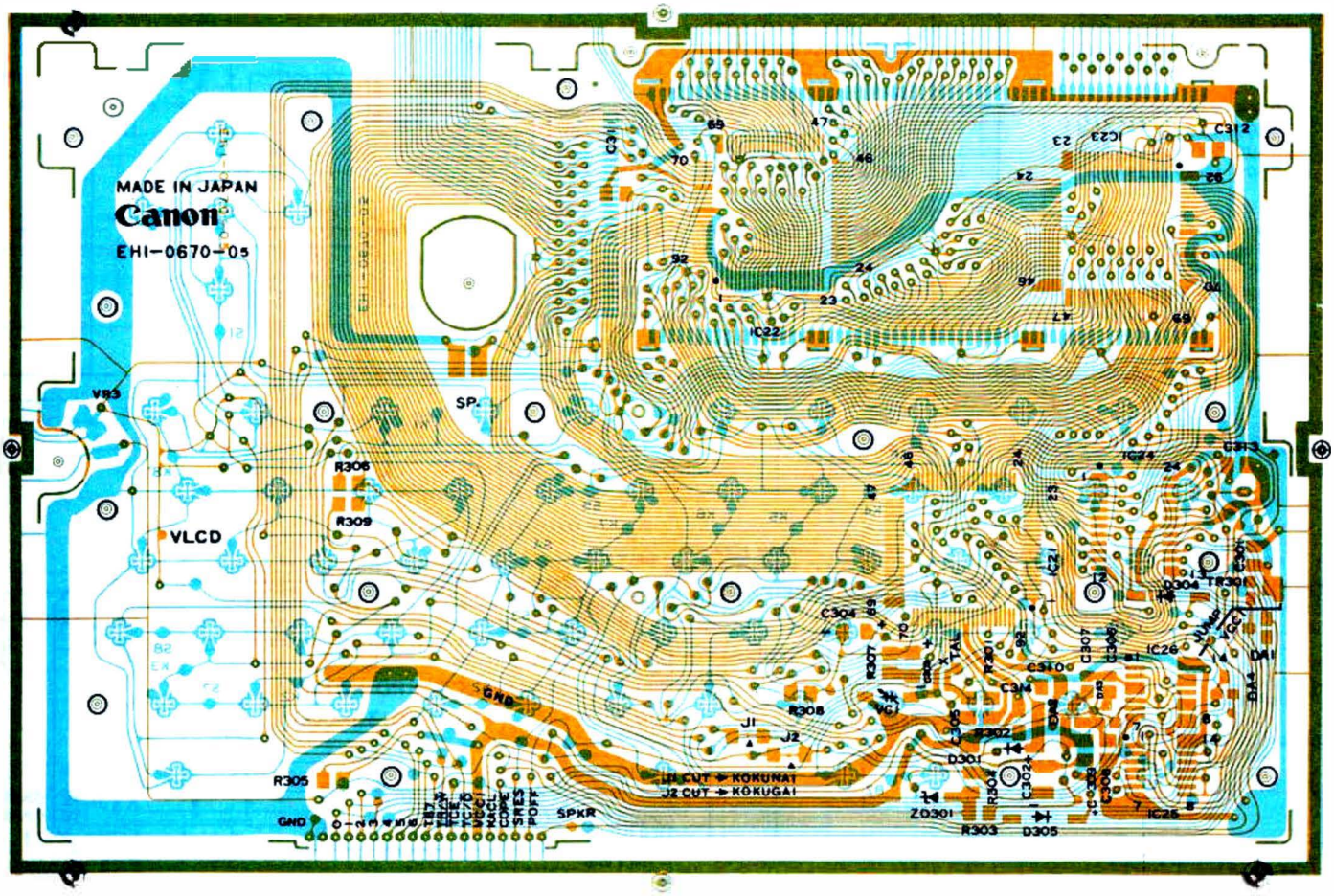

CCU BOARD

N	KEY NO	PART NO.	Q'TY	DESCRIPTION		REMARKS	PRICE
	C301	VC9-0532-000	1	CERAMIC CAPACITOR 0.1uF 25V			
	C302	VC9-1119-000	1	TANTALUM CAPACITOR 0.47uF 25V			
	C303	VC9-1120-000	1	TANTALUM CAPACITOR 1uF 16V			
	C304	VC9-1120-000	1	TANTALUM CAPACITOR 1uF 16V			
	C305	VC9-1122-000	1	CERAMIC CAPACITOR 33pF 25V			
*	C306	VC9-1225-000	1	CERAMIC CAPACITOR 2200pF 25V			
*	C307	VC9-1225-000	1	CERAMIC CAPACITOR 2200pF 25V			
*	C308	VC9-1224-000	1	CERAMIC CAPACITOR 22000pF 25V			
	C309	VC9-1119-000	1	TANTALUM CAPACITOR 0.47uF 25V			
	C310	VC9-0532-000	1	CERAMIC CAPACITOR 0.1uF 25V			
	C311	VC9-0532-000	1	CERAMIC CAPACITOR 0.1uF 25V			
	C312	VC9-0532-000	1	CERAMIC CAPACITOR 0.1uF 25V			
	C313	VC9-0532-000	1	CERAMIC CAPACITOR 0.1uF 25V			
	C314	VC9-0532-000	1	CERAMIC CAPACITOR 0.1uF 25V			
	D301	X65-5032-000	1	DIODE 1S1588			
	D302						
	D303						
	D304	X65-5032-000	1	DIODE 1S1588			
	D305	X65-5032-000	1	DIODE 1S1588			
	DA1	WA1-0375-000	1	DIODE MA153, CHIP TYPE			
	DA2	WA1-0380-000	1	DIODE MA157, CHIP TYPE			
	DA3	WA1-0380-000	1	DIODE MA157, CHIP TYPE			
	DA4	WA1-0357-000	1	DIODE MA153, CHIP TYPE			
*	IC21	WA3-9171-000	1	CMOS LSI T6834, SUB CPU			
	IC22	WA3-0791-000	1	CMOS LSI T6781, DRIVER			
	IC23	WA3-0791-000	1	CMOS LSI T6781, DRIVER			
	IC24	WA3-0955-000	1	CMOS LSI HM6117LFP-4, RAM	2k-byte		
	IC25	WA3-0963-000	1	CMOS IC TC40H032F, OR-GATE			
	IC26	WA3-0800-000	1	CMOS IC TC40H000F, NAND-GATE			
	LCD	WG2-0133-000	1	LIQUID CRYSTAL DISPLAY FRD7040			

N	KEY NO.	PART NO.	Q'TY	DESCRIPTION		REMARKS	PRICE	
	R301	VR9-1058-000	1	RESISTOR,CHIP TYPE 100k 1/8W				
	R302	VR9-1062-000	1	RESISTOR,CHIP TYPE 3.3k 1/8W				
	R303	VR9-2835-000	1	RESISTOR,CHIP TYPE 20k 1/8W				
	R304	VR9-1058-000	1	RESISTOR,CHIP TYPE 100k 1/8W				
	R305	VR9-1058-000	1	RESISTOR,CHIP TYPE 100k 1/8W				
	R306	VR9-1059-000	1	RESISTOR,CHIP TYPE 300k 1/8W				
	R307	VR9-2418-000	1	RESISTOR,CHIP TYPE 68k 1/8W				
	R308	VR9-2418-000	1	RESISTOR,CHIP TYPE 68k 1/8W				
	R309	VR9-1059-000	1	RESISTOR,CHIP TYPE 300k 1/8W				
	SP	WR1-0031-000	1	SPEAKER, CONE TYPE 200 ohm	30mW, D=22.7mm			
	TR301	WA2-0343-000	1	TRANSISTOR 2SC2712				
	VC1	VC9-0467-000	1	VARIABLE CAPACITOR 30pF				
	VR3	VR9-2618-000	1	VARIABLE RESISTOR 200k 50mW				
	XTL2	WK2-0002-000	1	CRYSTAL OACILLATOR 32.768kHz				
	ZD301	WA1-0308-000	1	ZENER DIODE HZ11LA-2				

NORMAL WAVEFORM (KEYBOARD)

BUZZER

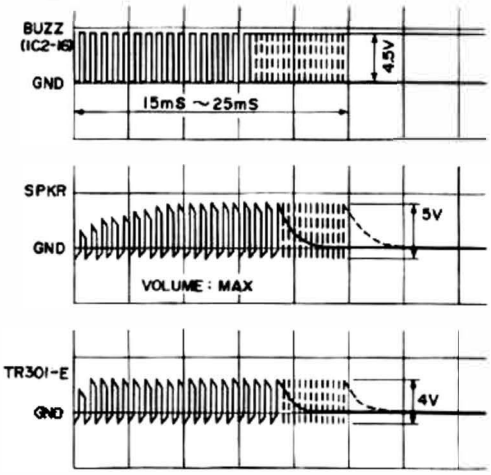

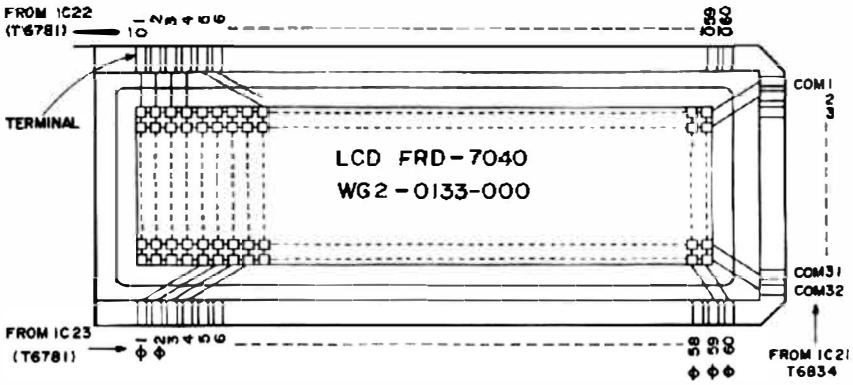

1. VLCD Circuit

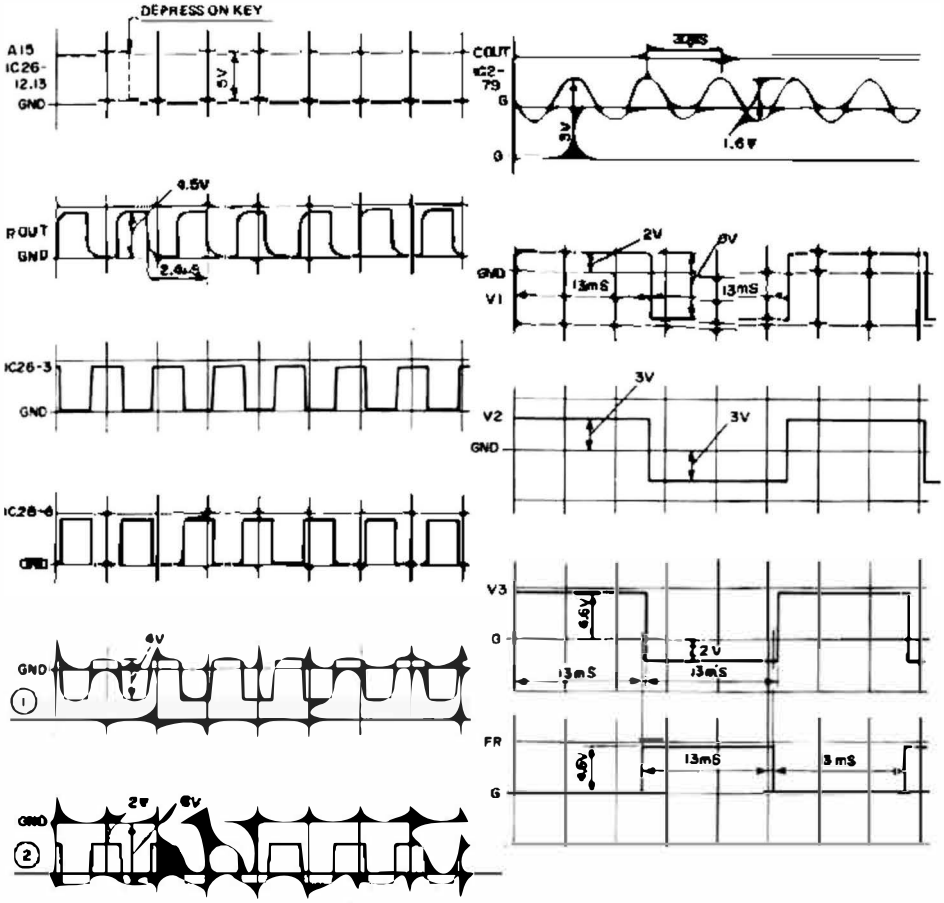

DISPLAY SIGNAL

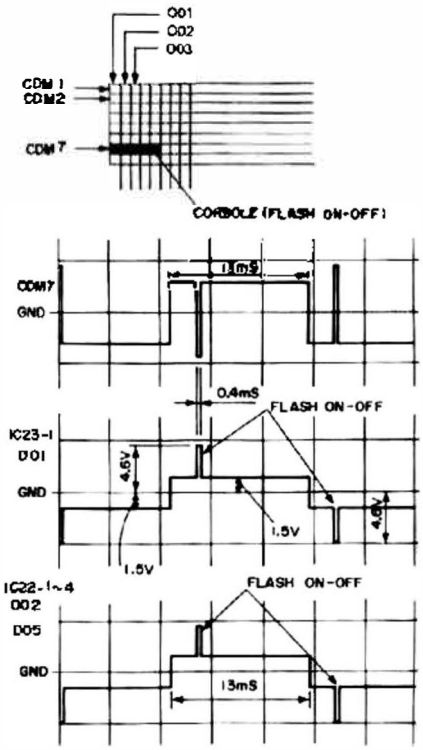

KEY SIGNAL CCU 2/2

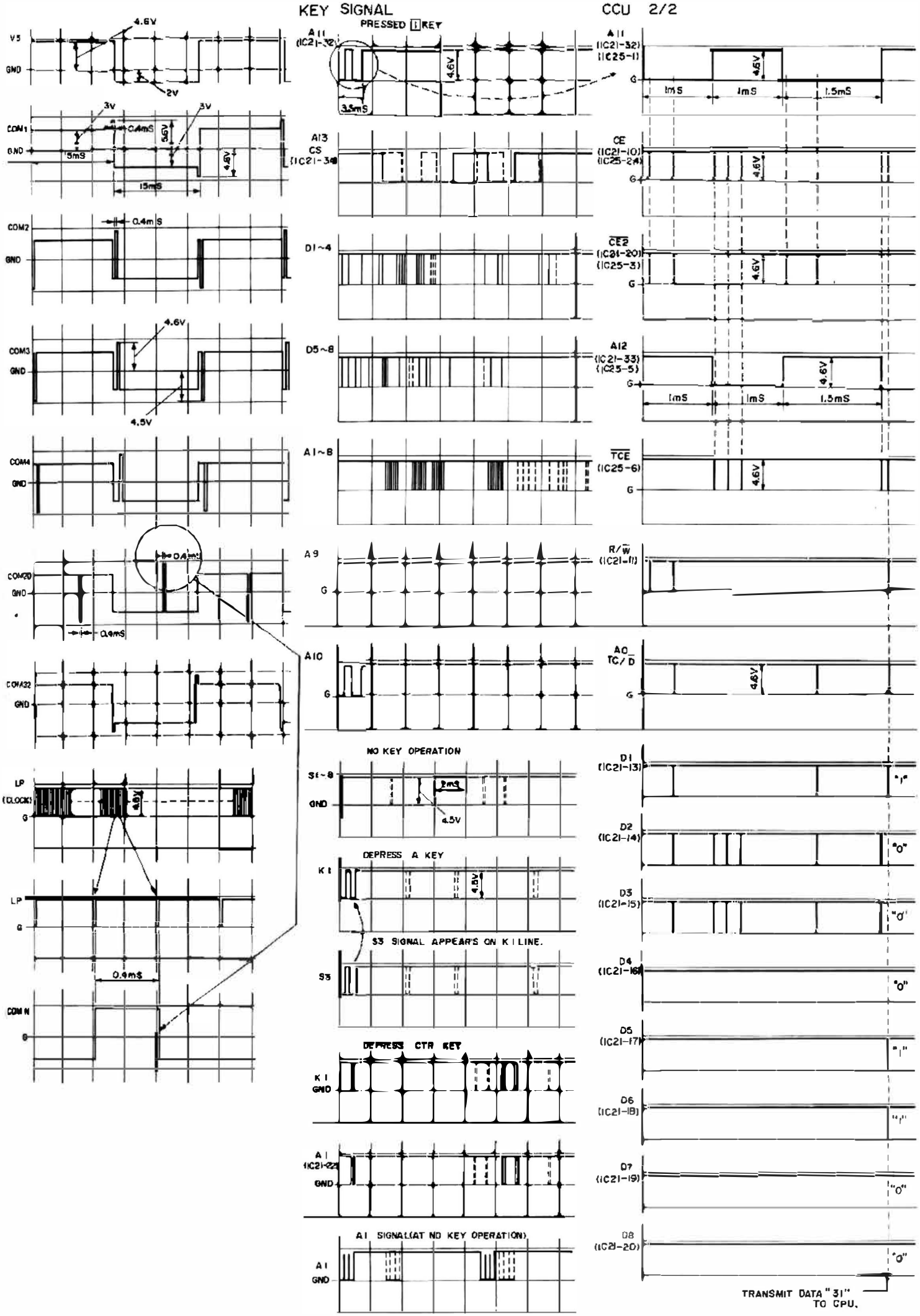

CCU BOARD TROUBLESHOOTING

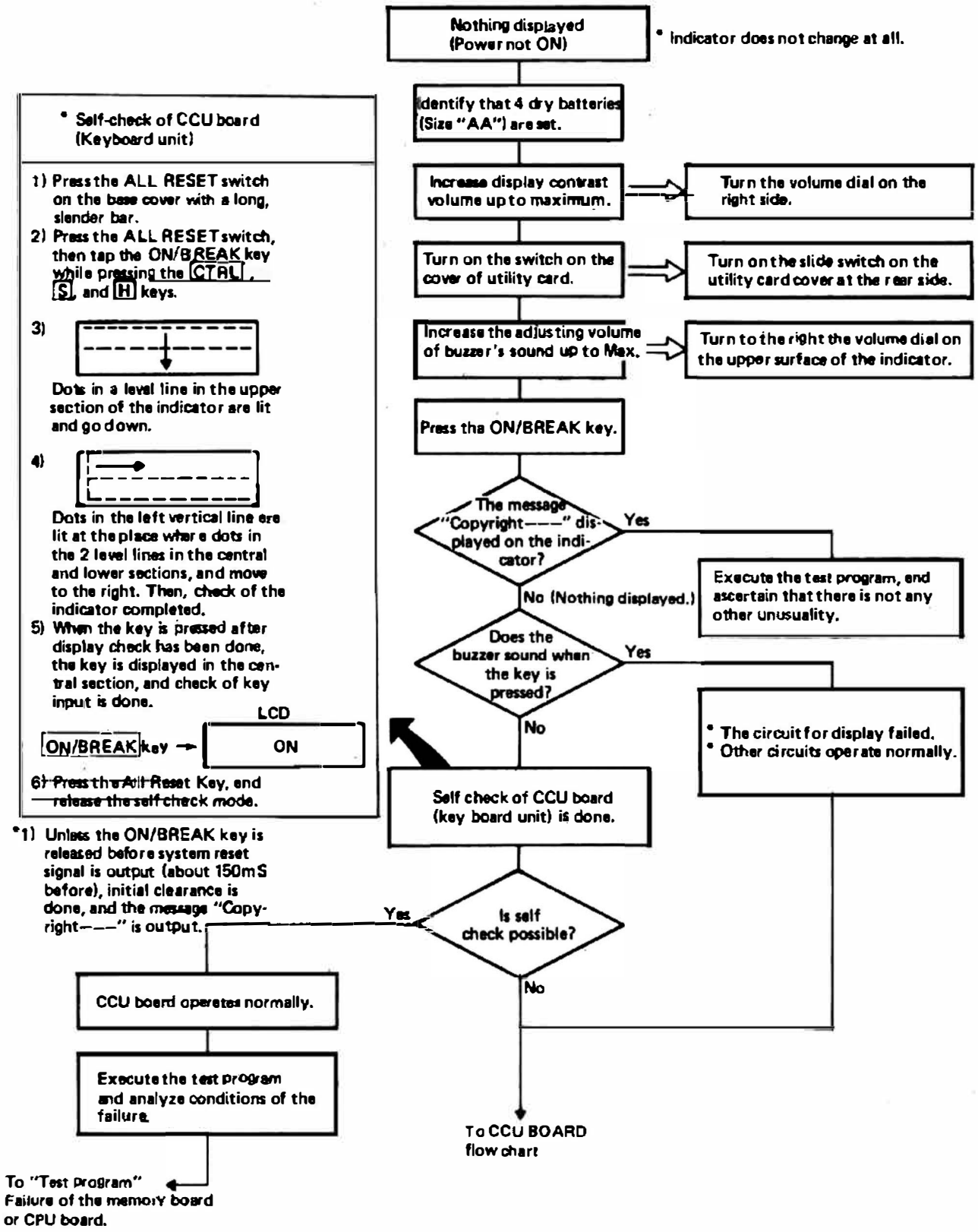

TROUBLESHOOTING

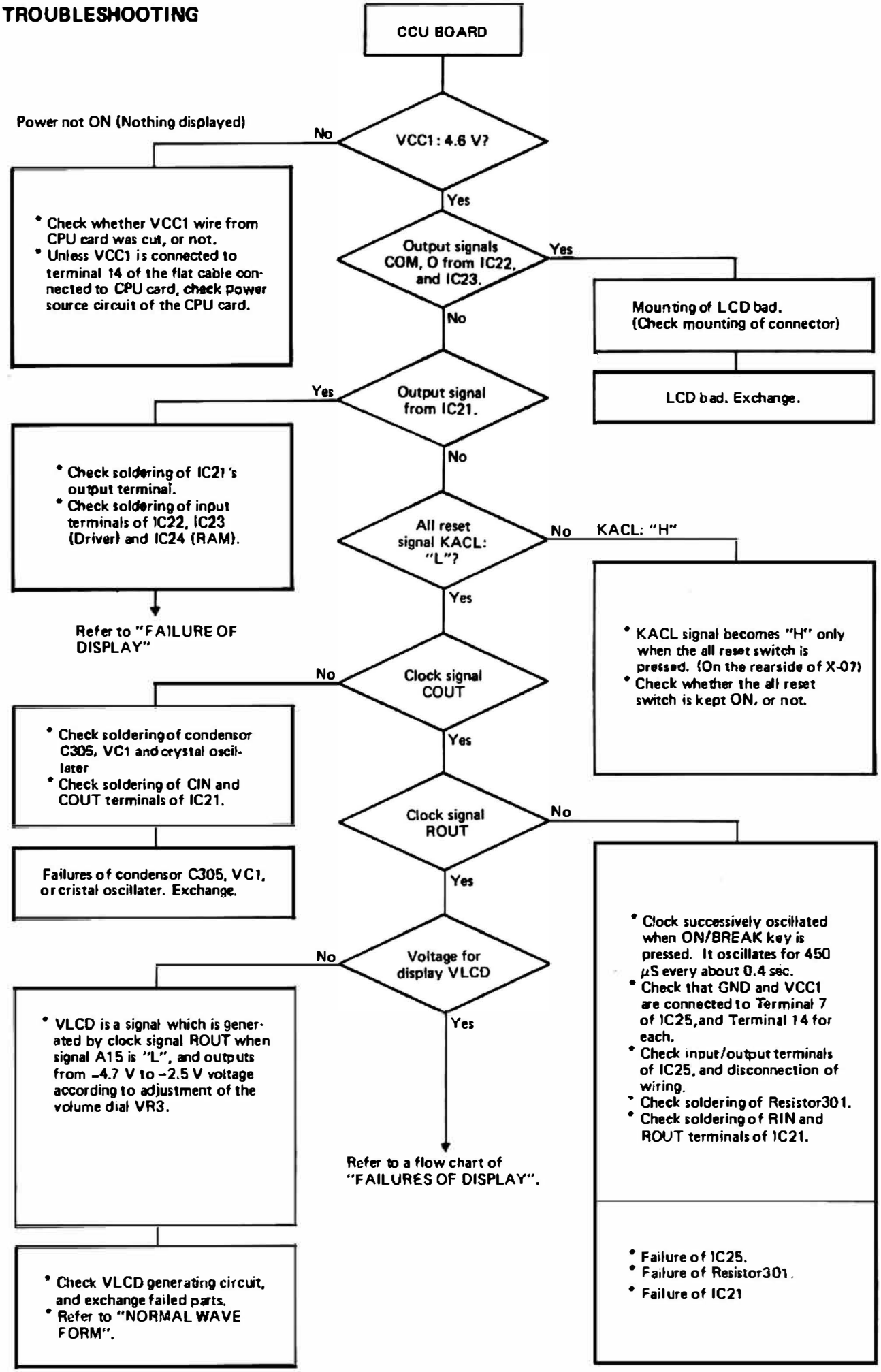

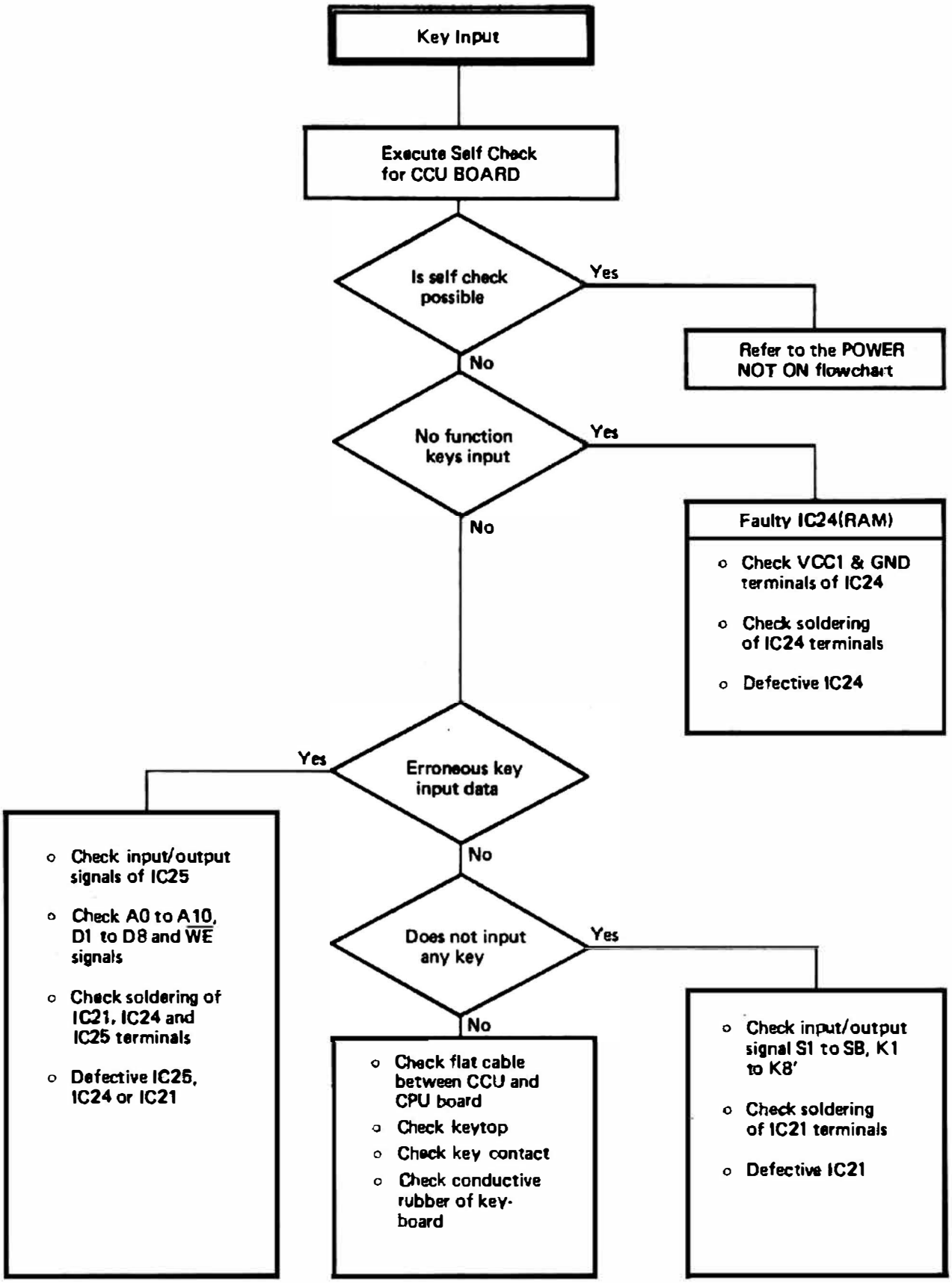
Key Input
Execute Self Check for CCU BOARD
Is self check possible
Yes
Refer to the POWER NOT ON flowchart
No
No function keys input
Yes
Faulty IC24(RAM)
o Check VCC1 & GND terminals of IC24
o Check soldering of IC24 terminals
o Defective IC24
No
Erroneous key input data
Yes
o Check input/output signals of IC25
o Check A0 to A10, D1 to D8 and WE signals
o Check soldering of IC21, IC24 and IC25 terminals
o Defective IC25, IC24 or IC21
No
Does not input any key
Yes
o Check input/output signal S1 to S8, K1 to K8'
o Check soldering of IC21 terminals
o Defective IC21
No
o Check flat cable between CCU and CPU board
o Check keytop
o Check key contact
o Check conductive rubber of key-board

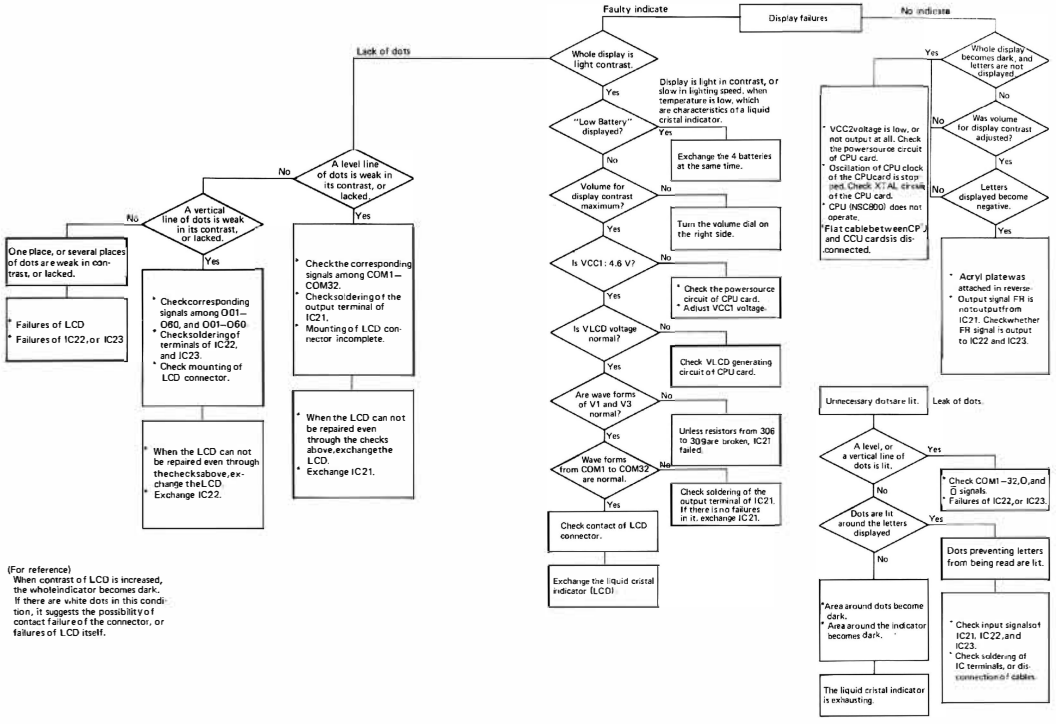

(For reference)
When contrast of LCD is increased, the wholeindicator becomes dark.
If there are white dots in this condition, it suggests the possibility of contact failure of the connector, or failures of LCD itself.

9.2 CPU BOARD CIRCUIT DIAGRAM

9-2) CPU BOARD CIRCUIT DIAGRAM

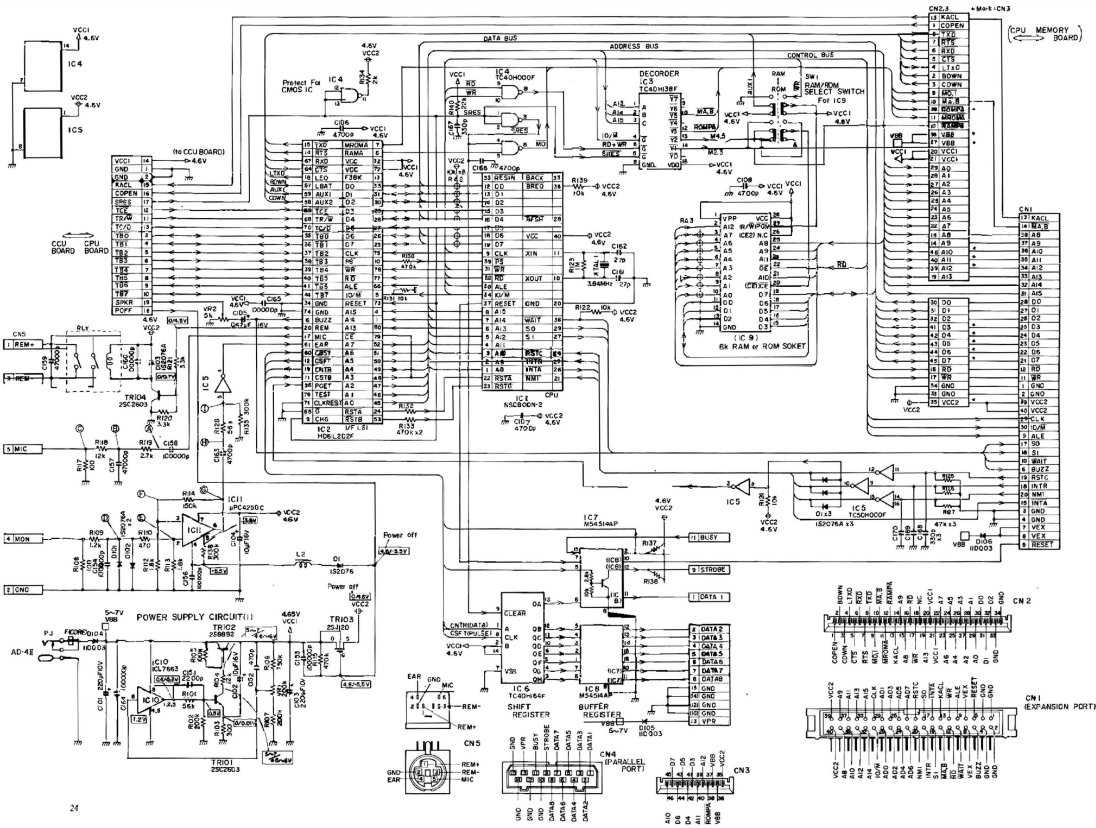

MODIFIED POWER SUPPLY CIRCUIT (WITHOUT IC10)

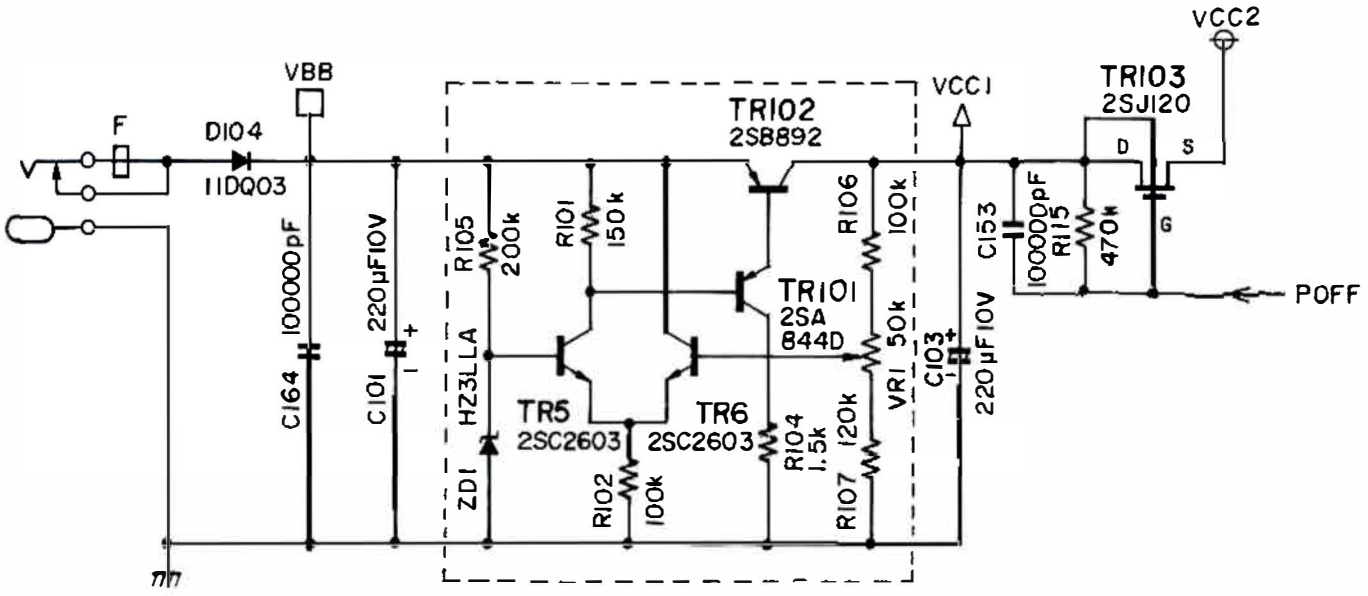

CARD LAYOUT

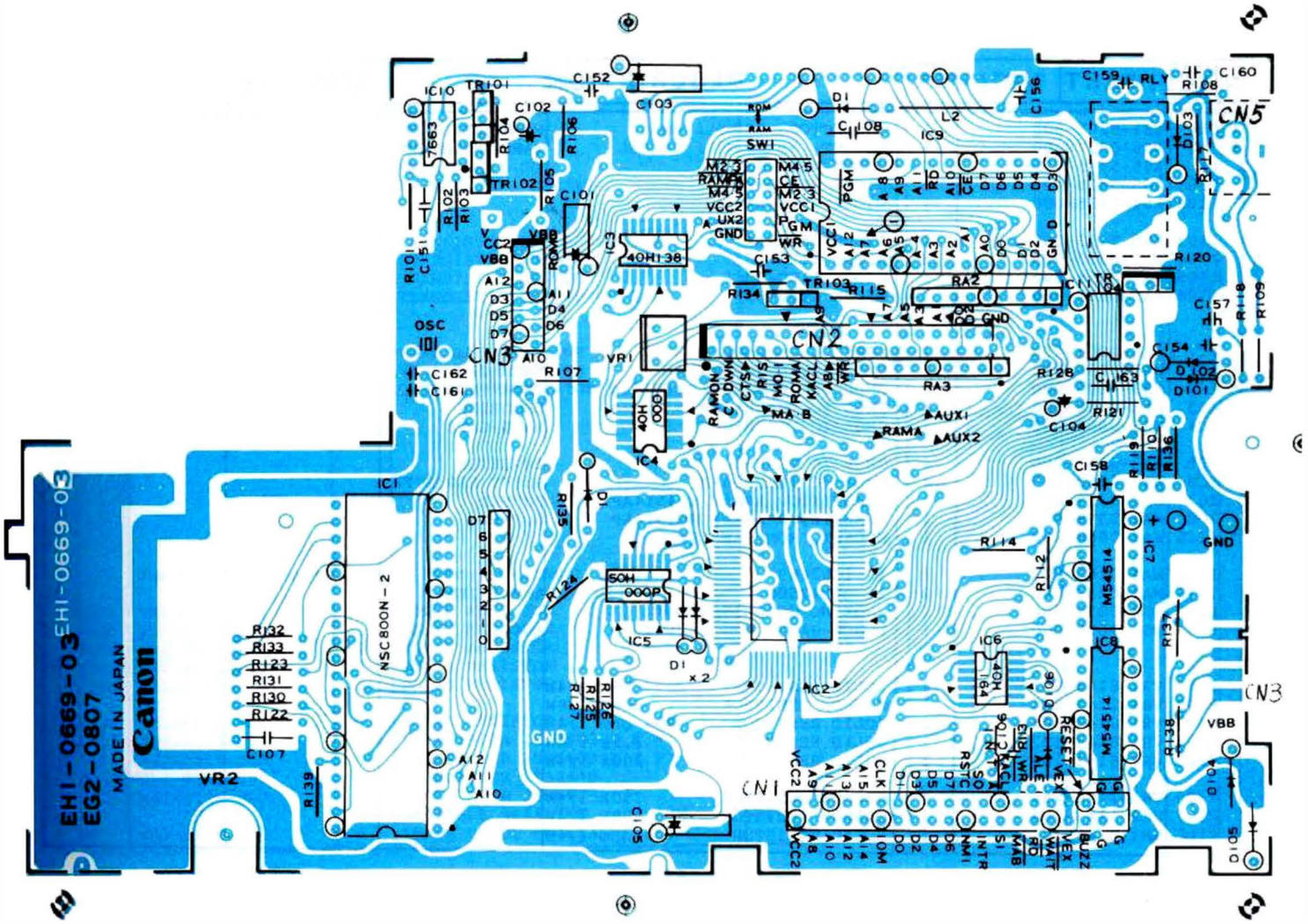

シルク図

N	KEY NO.	PART NO.	Q'TY	DESCRIPTION		REMARKS	PRICE	
	C101	VC9-0478-000	1	ELECTROLYTIC CAPACITOR 220uF	10V			
*	C102	VC9-1112-000	1	ELECTROLYTIC CAPACITOR 10uF	16V			
	C103	VC9-0478-000	1	ELECTROLYTIC CAPACITOR 220uF	10V			
*	C104	VC9-1112-000	1	ELECTROLYTIC CAPACITOR 10uF	16V			
	C105	VC9-1118-000	1	ELECTROLYTIC CAPACITOR 0.47uF	16V			
	C106	VC9-1010-000	1	CERAMIC CAPACITOR 4700pF	50V			
	C107	VC9-1010-000	1	CERAMIC CAPACITOR 4700pF	50V			
	C108	VC9-1010-000	1	CERAMIC CAPACITOR 4700pF	50V			
	C109	----						
	C110	----						
	C151	VC4-3503-222	1	CERAMIC CAPACITOR 2200pF	50V			
	C152	VC4-3503-471	1	CERAMIC CAPACITOR 470pF	50V			
	C153	VC9-0582-000	1	CERAMIC CAPACITOR 100000pF	25V			
	C154	VC9-0582-000	1	CERAMIC CAPACITOR 100000pF	25V			
	C155	----						
	C156	VC9-0582-000	1	CERAMIC CAPACITOR 100000pF	25V			
	C157	VC4-3503-472	1	CERAMIC CAPACITOR 4700pF	50V			
	C158	VC4-4504-223	1	CERAMIC CAPACITOR 22000pF	50V			
	C159	VC9-1202-000	1	CERAMIC CAPACITOR 47000pF	25V			
	C160	VC9-0582-000	1	CERAMIC CAPACITOR 100000pF	50V			
*	C161	VC4-2502-270	1	CERAMIC CAPACITOR 27pF	50V			
*	C162	VC4-2502-270	1	CERAMIC CAPACITOR 27pF	50V			
	C163	VC4-3503-472	1	CERAMIC CAPACITOR 4700pF	50V			
	C165	VC9-0582-000	1	CERAMIC CAPACITOR 100000pF	50V			
	C166	VC4-3503-472	1	CERAMIC CAPACITOR 4700pF	50V			
	C167	VC4-3503-331	1	CERAMIC CAPACITOR 330pF	50V			
	C168	VC4-3503-331	1	CERAMIC CAPACITOR 330pF	50V			
	C169	VC4-3503-331	1	CERAMIC CAPACITOR 330pF	50V			
	C170	VC4-3503-331	1	CERAMIC CAPACITOR 330pF	50V			
*	CN1	WS1-0211-000	1	CONNECTOR, 40P	EXPANSION PORT			
*	CN2	VS1-0148-034	1	CONNECTOR, 34P	CPU-MEMORY PCB			
*	CN3	VS1-0148-012	1	CONNECTOR, 12P	CPU-MEMORY PCB			

N	KEY NO.	PART NO.	Q'TY	DESCRIPTION		REMARKS	PRICE	
*	CN4	WS1-0205-000	1	CONNECTOR, 15P	PARALLEL PORT			
*	CN5	WS6-0027-000	1	SOCKET, 5P	TAPE RECORDER			
	D1	X65-5435-000	4	DIODE 1S2076A				
	D101	X65-5435-000	1	DIODE 1S2076A				
	D102	X65-5435-000	1	DIODE 1S2076A				
	D103	X65-5435-000	1	DIODE 1S2076A				
	D104	WA1-0355-000	1	DIODE 11D0-03				
	D105	WA1-0355-000	1	DIODE 11D0-03				
	D106	WA1-0355-000	1	DIODE 11D0-03				
	F	WE8-0002-000	1	CORE				
*	IC1	WA3-0956-000	1	CMOS LSI NSC800N-2	MAIN CPU			
*	IC2	WA3-9170-000	1	CMOS LSI HD61L202F	INTERFACE			
	IC3	WA3-0958-000	1	CMOS IC TC40H138F	DECORDER			
	IC4	WA3-0800-000	1	CMOS IC TC40H000PF	NAND-GATE			
	IC5	WA3-0957-000	1	CMOS IC TC50H000F	INVERTOR			
	IC6	WA3-0960-000	1	CMOS IC TC40H164F	SHIFT REGISTER			
	IC7	WA2-0399-000	1	TRANSISTOR ARRAY M54514AP	BUFFER			
	IC8	WA2-0399-000	1	TRANSISTOR ARRAY M54514AP	BUFFER			
*	(IC9	WA9-0058-000	1	SOCKET, ROM/RAM LSI				
	IC10	WA4-0261-000	1	IC ICL7663				
	IC11	WA4-0283-000	1	IC uPD4250C	AMPLIFIER			
	L2	WE2-9019-000	1	CHOKING COIL 15mH				
	PJ	WS6-9910-000	1	POWER JACK	AD4-II			
	R101	VR1-8143-563	1	SOLID RESISTOR 56k	1/4W			
	R102	VR1-1143-204	1	CARBON RESISTOR 200k	1/4W			
	R103	VR1-8143-301	1	SOLID RESISTOR 300 ohm	1/4W			
	R104	VR1-8143-122	1	SOLID RESISTOR 1.2k	1/4W			
	R105	VR1-8143-104	1	SOLID RESISTOR 100k	1/4W			
	R106	VR1-1143-754	1	CARBON RESISTOR 750k	1/4W			
	R107	VR1-1143-204	1	CARBON RESISTOR 200k	1/4W			
	R108	VR1-8143-101	1	SOLID RESISTOR 100 ohm	1/4W			

KEY NO.	PART NO.	QTY	DESCRIPTION		REMARKS	PRICE
R109	VR1-8143-122	1	SOLID RESISTOR	1.2K 1/4W		
R110	VR1-8143-471	1	SOLID RESISTOR	470 ohm 1/4W		
R111	----					
R112	VR1-8143-182	1	SOLID RESISTOR	1.8K 1/4W		
R113	VR1-8143-182	1	SOLID RESISTOR	1.8K 1/4W		
R114	VR1-8143-154	1	SOLID RESISTOR	150K 1/4W		
R115	VR1-8143-474	1	SOLID RESISTOR	470K 1/4W		
R116	----					
R117	VR1-8143-471	1	SOLID RESISTOR	470 ohm 1/4W		
R118	VR1-8143-123	1	SOLID RESISTOR	12K 1/4W		
R119	VR1-8143-562	1	SOLID RESISTOR	5.6K 1/4W		
R120	VR1-8143-332	1	SOLID RESISTOR	3.3K 1/4W		
R121	VR1-8143-332	1	SOLID RESISTOR	3.3K 1/4W		
R122	VR1-8143-103	1	SOLID RESISTOR	10K 1/4W		
R123	VR1-8143-105	1	SOLID RESISTOR	1M 1/4W		
R124	VR1-8143-103	1	SOLID RESISTOR	10K 1/4W		
R125	VR1-8143-473	1	SOLID RESISTOR	47K 1/4W		
R126	VR1-8143-473	1	SOLID RESISTOR	47K 1/4W		
R127	VR1-8143-473	1	SOLID RESISTOR	47K 1/4W		
R128	VR1-8143-563	1	SOLID RESISTOR	56K 1/4W		
R129	----					
R130	VR1-8143-474	1	SOLID RESISTOR	470K 1/4W		
R131	VR1-8143-103	1	SOLID RESISTOR	10K 1/4W		
R132	VR1-8143-474	1	SOLID RESISTOR	470K 1/4W		
R133	VR1-8143-474	1	SOLID RESISTOR	470K 1/4W		
R134	VR1-8143-202	1	SOLID RESISTOR	2K 1/4W		
R135	VR1-8143-304	1	SOLID RESISTOR	300K 1/4W		
R136	VR1-8143-304	1	SOLID RESISTOR	300K 1/4W		
R137	VR1-8143-223	1	SOLID RESISTOR	22K 1/4W		
R138	VR1-8143-223	1	SOLID RESISTOR	22K 1/4W		
R139	VR1-8143-103	1	SOLID RESISTOR	10K 1/4W		
R140	VR1-8143-223	1	SOLID RESISTOR	22K 1/4W		

KEY NO.	PART NO.	QTY	DESCRIPTION		REMARKS	PRICE
RA2	VR9-0948-000	1	RESISTOR ARRAY	10Kx8 1/8W		
RA3	VR9-2253-000	1	RESISTOR ARRAY	300Kx8 1/8W		
RLY	WB1-0068-000	1	RELAY, RKT-002		TAPE RECORDER	
SW1	WC3-0049-000	1	SWITCH, 4P, SSS342		ROM/RAM SWITCH	
TR101	WA2-0113-000	1	TRANSISTOR 2SC2603(D,E,F)			
TR102	WA2-0297-000	1	TRANSISTOR 2SB892			
TR103	WA2-0375-000	1	TRANSISTOR 2SJ120		VCC2	
TR104	WA2-0113-000	1	TRANSISTOR 2SC2603(D,E,F)			
VR1	VR9-1999-000	1	VARIABLE RESISTOR	200K 1/2W	VCC1	
VR2	VR9-2783-000	1	VARIABLE RESISTOR	5K 50mW	BUZZER	
XTAL1	WK2-9004-000	1	CRYSTAL OSCILLATOR 3.84MHz		CPU	
	For Modified Power Supply Circuit(Without IC10)					
R101	VR1-8143-154	1	SOLID RESISTOR	150K 1/4W		
R102	VR1-8143-104	1	SOLID RESISTOR	100K 1/4W		
R104	VR1-8143-152	1	SOLID RESISTOR	1.5K 1/4W		
R105	VR1-8143-204	1	SOLID RESISTOR	200K 1/4W		
R106	VR1-8143-104	1	SOLID RESISTOR	100K 1/4W		
R107	VR1-8143-124	1	SOLID RESISTOR	120K 1/4W		
TR5	WA2-0113-000	1	TRANSISTOR 2SC2603(D,E,F)			
TR6	WA2-0113-000	1	TRANSISTOR 2SC2603(D,E,F)			
TR101	WA2-0195-000	1	TRANSISTOR 2SA844D			
TR102	WA2-0297-000	1	TRANSISTOR 2SB892			
VR1		1	VARIABLE RESISTOR	50K	VCC1	
ZD1	WA1-0410-000	1	ZENER DIODE HZ3LLA, 3V			

MEMO

NORMAL WAVEFORM

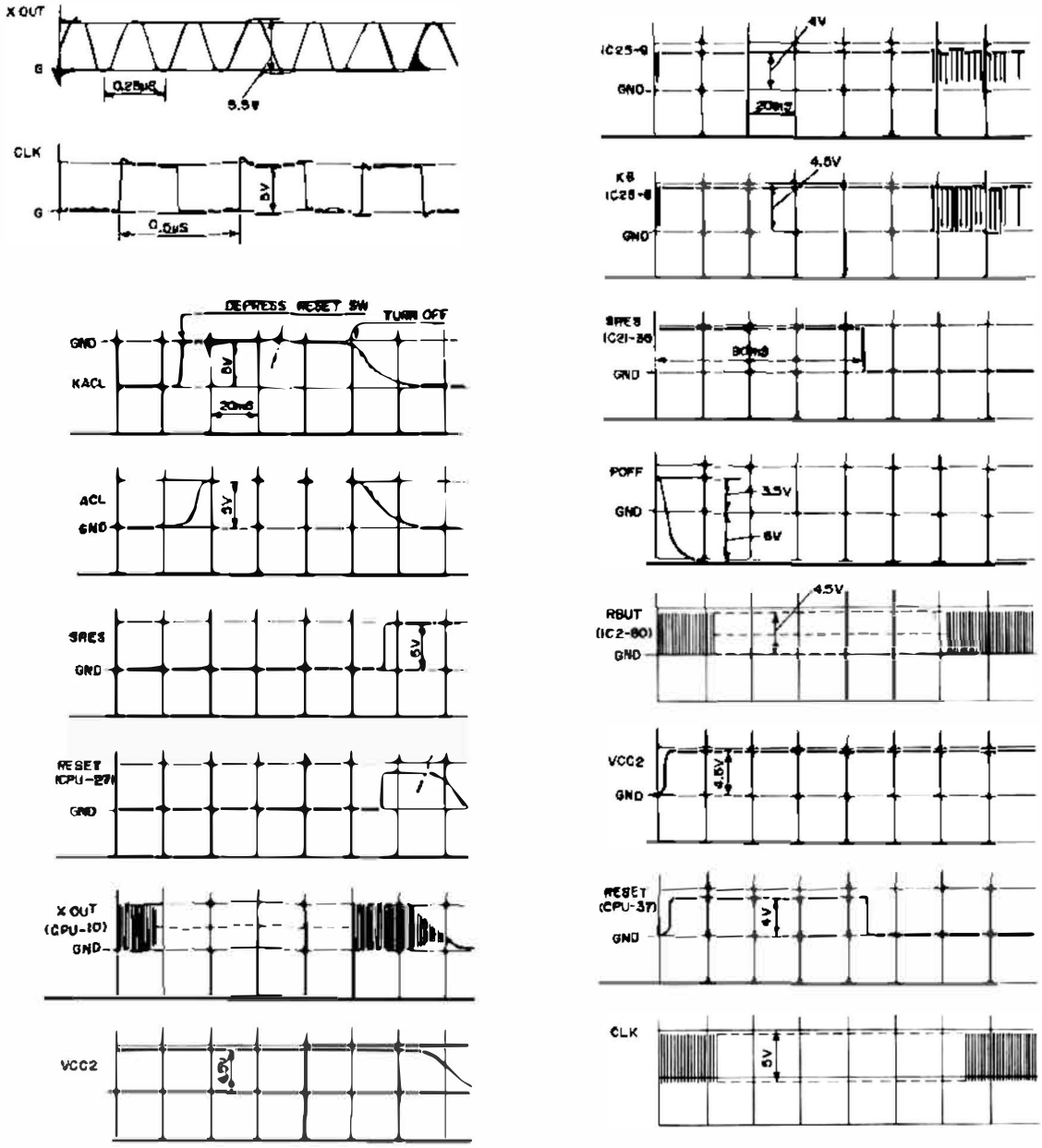

RAMPA, ROMPA, RAMA & $\overline{PS}$.

FIST PRESS RESET SW, THEN ON KEY IS PRESSED.

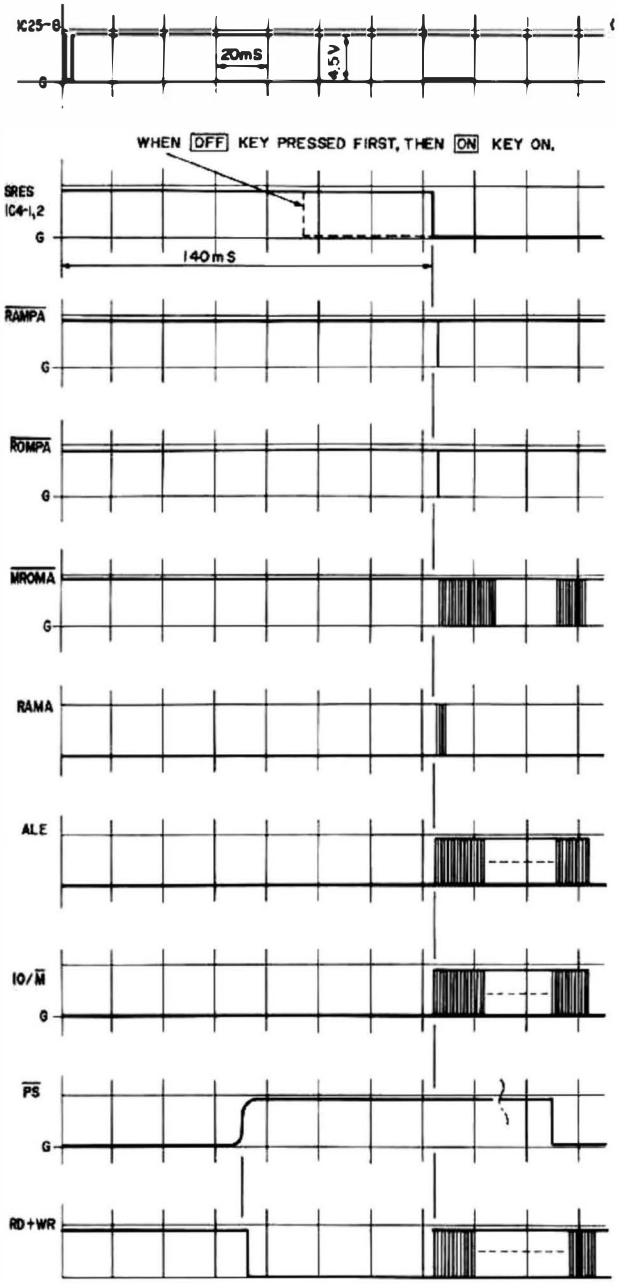

TAPE RECORDER

SAVE

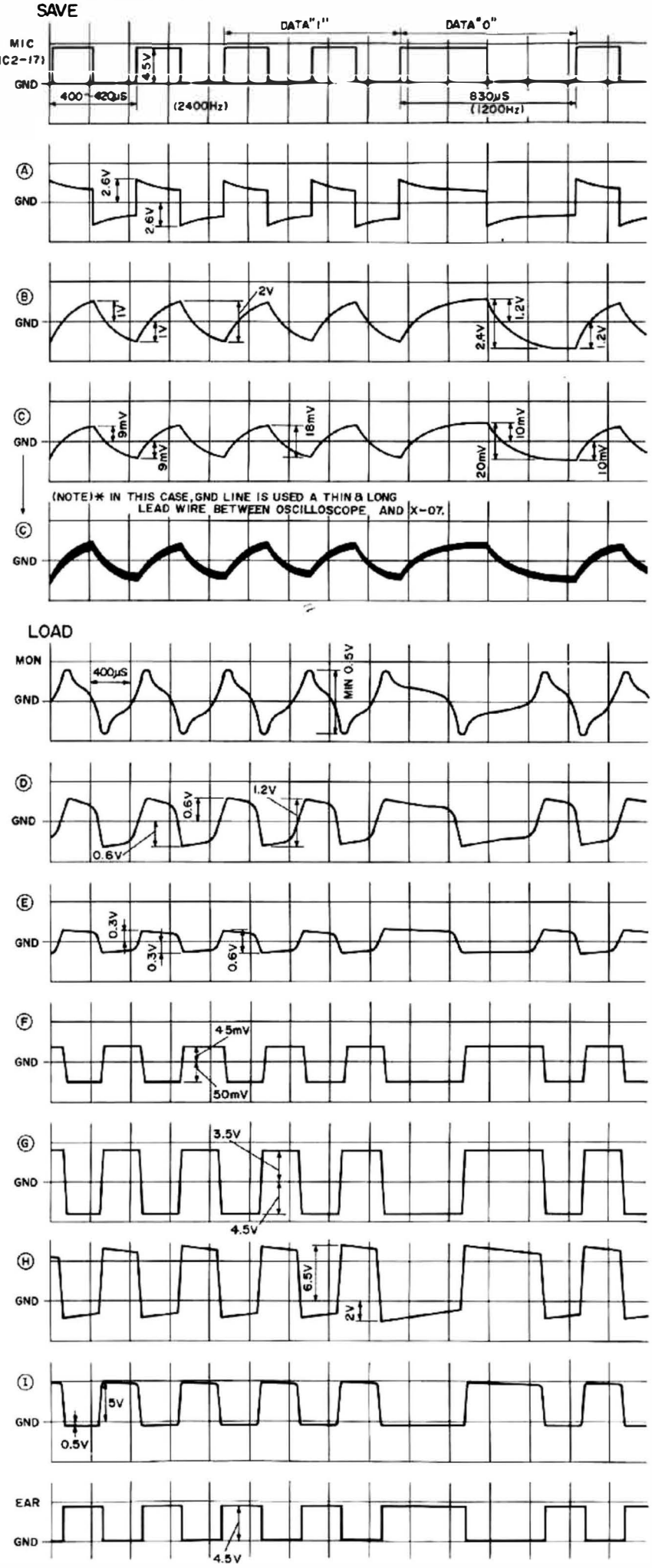

LOAD

CPU BOARD TROUBLESHOOT

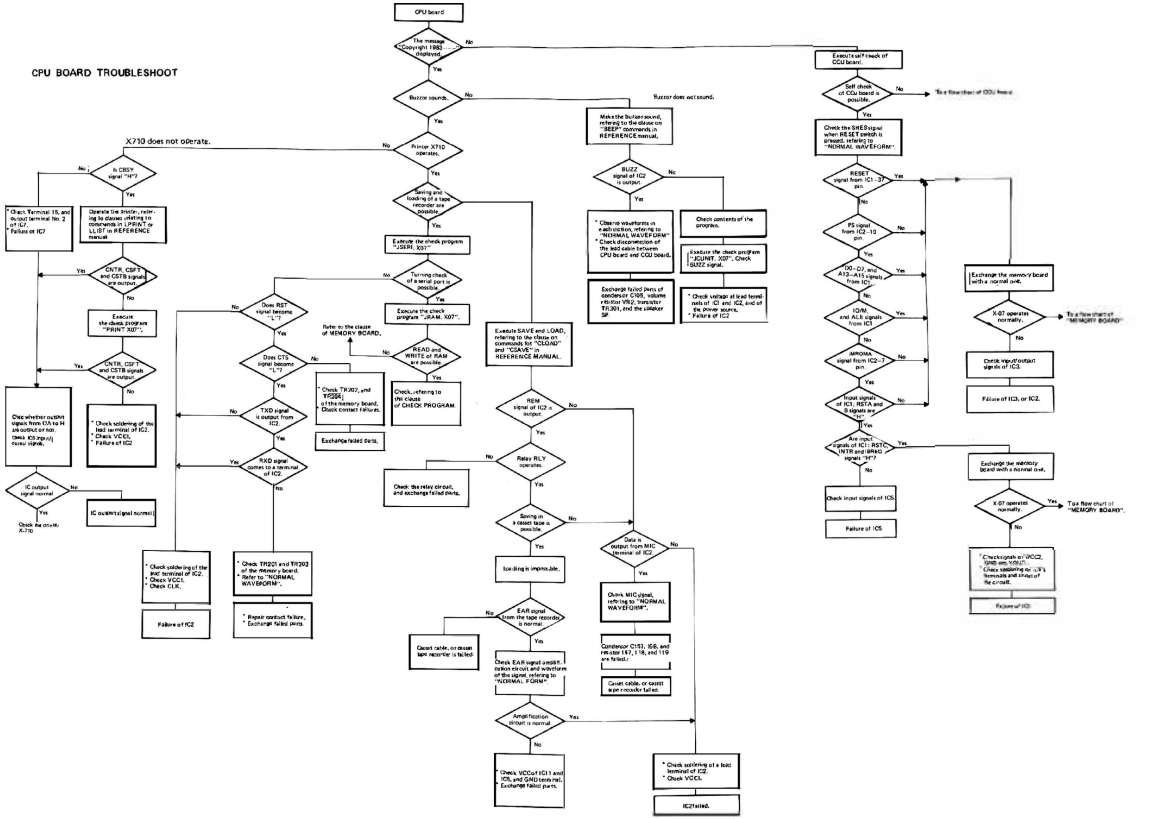

9.3 MEMORY BOARD CIRCUIT DIAGRAM

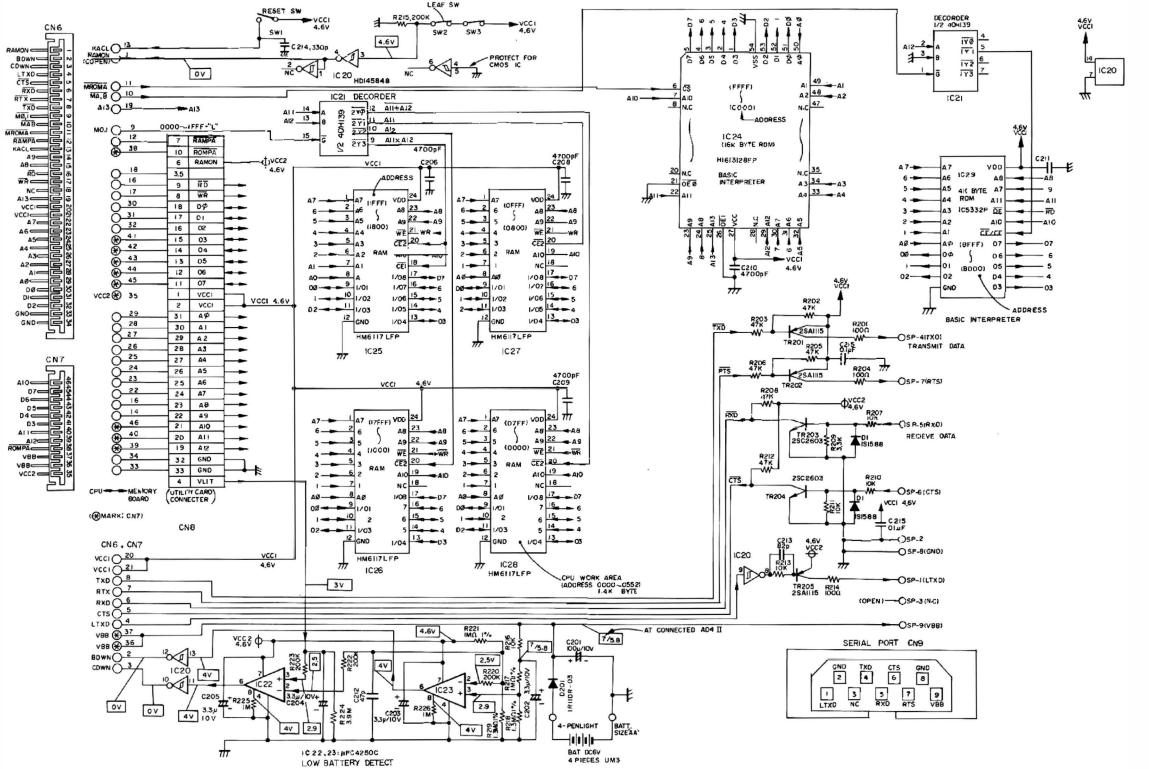
CN6
CN7
CN8
RESET SW
LEAF SW
PROTECT FOR CMOS IC
IC20
HD145848
IC21 DECORDER
IC24
HM6116128FP
BASIC INTERPRETER
(FFFF)
(0000)
ADDRESS
IC29
IC5332P
(8000)
(BASIC INTERPRETER)
IC25
IC26
IC27
IC28
HM6117LFP
RAM
CPU WORK AREA
(ADDRESS 0000-05521
1.4K BYTE)
(UTILITY CARD CONNECTER)
CPU — MEMORY BOARD
(●MARK: CN7)
CN6 , CN7
TRANSMIT DATA
RECEIVE DATA
(OPEN)
AT CONNECTED AD4 II
SERIAL PORT CN9
GND TXD CTS GND
LTXD NC RXD RTS VBB
IC22,23: μPC4250C
LOW BATTERY DETECT
4-PENLIGHT
BATT. SIZE AA
BAT DC6V
4 PIECES UM3

CARD LAYOUT

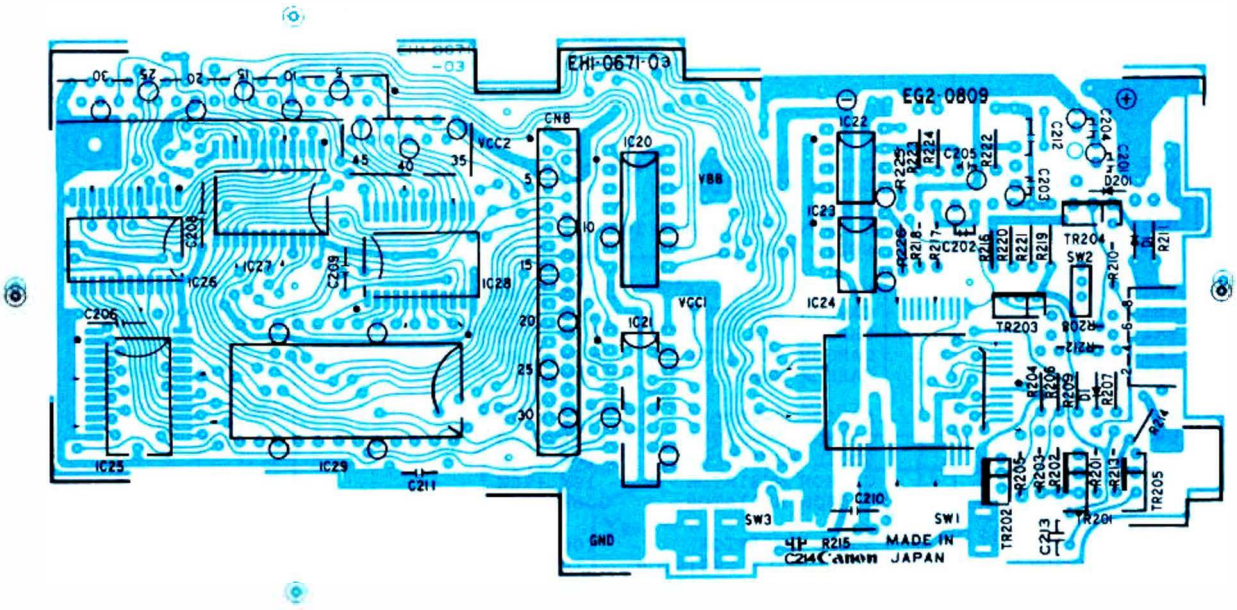

N	KEY NO.	PART NO.	Q'TY	DESCRIPTION		REMARKS	PRICE
	C201	VC9-0983-000	1	ELECTROLYTIC CAPACITOR 100uF	10V		
	C202	VC9-0840-000	1	TANTALUM CAPACITOR 3.3uF	10V		
	C203	VC9-0840-000	1	TANTALUM CAPACITOR 3.3uF	10V		
	C204	VC9-0840-000	1	TANTALUM CAPACITOR 3.3uF	10V		
	C205	VC9-0840-000	1	TANTALUM CAPACITOR 3.3uF	10V		
	C206	VC9-1010-000	1	CERAMIC CAPACITOR 4700pF	50V		
	C207	----					
	C208	VC9-1010-000	1	CERAMIC CAPACITOR 4700pF	50V		
	C209	VC9-1010-000	1	CERAMIC CAPACITOR 4700pF	50V		
	C210	VC9-1010-000	1	CERAMIC CAPACITOR 4700pF	50V		
	C211	VC9-1010-000	1	CERAMIC CAPACITOR 4700pF	50V		
	C212	VC4-2502-470	1	CERAMIC CAPACITOR 47pF	50V		
*	C213	VC4-2502-820	1	CERAMIC CAPACITOR 82pF	50V		
	C214	----					
	C215	VC9-1060-000	1	CERAMIC CAPACITOR 0.1uF	50V		
*	CN6	VS1-0149-012	1	CONNECTOR, 12P	MEMORY-CPU BOARD		
*	CN7	VS1-0149-034	1	CONNECTOR, 34P	MEMORY-CPU BOARD		
*	CN8	WS8-9007-000	1	CONNECTOR, 33P	UTILITY CARD		
*	CN9	WS1-0221-000	1	CONNECTOR, 9P	SERIAL PORT		
	D1	X65-5032-000	2	DIODE 1S1588			
	D201	WA1-0355-000	1	DIODE 11D0-03			
	IC20	WA3-0976-000	1	CMOS IC HD14584B, INVERTOR			
	IC21	WA3-0959-000	1	CMOS IC TC40H139P, DECORDER			
	IC22	WA4-0283-000	1	CMOS IC uPC4250C, DETECTOR			
	IC23	WA4-0283-000	1	CMOS IC uPD4250C, DETECTOR			
*	IC24	WA3-9169-000	1	CMOS LSI HM613128FP, ROM, BASIC	16k-Byte		
	IC25	WA3-0955-000	1	CMOS LSI HM6117LFP, RAM	2k-byte		
	IC26	WA3-0955-000	1	CMOS LSI HM6117LFP, RAM	2k-byte		
	IC27	WA3-0955-000	1	CMOS LSI HM6117LFP, RAM	2k-byte		

N	KEY NO.	PART NO.	Q'TY	DESCRIPTION		REMARKS	PRICE	
	IC28	WA3-0955-000	1	CMOS LSI HM6117LFP, RAM	2k-byte			
*	IC29	WA3-9168-000	1	CMOS LSI TC5332P, ROM, BASIC	4k-byte			
	R201	VR1-8143-101	1	SOLID RESISTOR 100 ohm 1/4W				
	R202	VR1-8143-473	1	SOLID RESISTOR 47K 1/4W				
	R203	VR1-8143-473	1	SOLID RESISTOR 47K 1/4W				
	R204	VR1-1181-101	1	CARBON RESISTOR 100 ohm 1/8W				
	R205	VR1-8143-473	1	SOLID RESISTOR 47K 1/4W				
	R206	VR1-1181-473	1	CARBON RESISTOR 47K 1/8W				
	R207	VR1-1181-103	1	CARBON RESISTOR 10K 1/8W				
	R208	VR1-1181-473	1	CARBON RESISTOR 47K 1/8W				
	R209	VR1-1181-332	1	CARBON RESISTOR 3.3K 1/8W				
	R210	VR1-1181-103	1	CARBON RESISTOR 10K 1/8W				
	R211	VR1-8143-103	1	SOLID RESISTOR 10K 1/4W				
	R212	VR1-1181-473	1	CARBON RESISTOR 47K 1/8W				
	R213	VR1-8143-103	1	SOLID RESISTOR 10K 1/4W				
	R214	VR1-1181-103	1	CARBON RESISTOR 10K 1/8W				
	R215	VR1-1143-204	1	CARBON RESISTOR 200K 1/4W				
	R216	VR1-8143-103	1	SOLID RESISTOR 10K 1/4W				
	R217	VR9-2781-000	1	METAL FILM RESISTOR 1M 1/8W	+/- 1%			
	R218	VR9-2780-000	1	METAL FILM RESISTOR 1.3M 1/8W	+/- 1%			
	R219	VR9-2780-000	1	METAL FILM RESISTOR 1.3M 1/8W	+/- 1%			
	R220	VR1-1143-204	1	CARBON RESISTOR 200K 1/4W				
	R221	VR9-2781-000	1	METAL FILM RESISTOR 1M 1/8W	+/- 1%			
	R222	VR1-1143-204	1	CARBON RESISTOR 200K 1/4W				
	R223	VR1-1143-204	1	CARBON RESISTOR 200K 1/4W				
	R224	VR1-1143-395	1	CARBON RESISTOR 3.9M 1/4W				
*	SW3	WC3-0039-000	1	SWITCH, SSS312	LOCK SWITCH			
	TR201	WA2-0240-000	1	TRANSISTOR 2SA1115(F)				
	TR202	WA2-0240-000	1	TRANSISTOR 2SA1115(F)				

N	KEY NO.	PART NO.	Q'TY	DESCRIPTION		REMARKS	PRICE	
	TR203	WA2-0113-000	1	TRANSISTOR 2SC2603(D,E,F)				
	TR204	WA2-0113-000	1	TRANSISTOR 2SC2603(D,E,F)				
	TR205	WA2-0240-000	1	TRANSISTOR 2SA1115(F)				

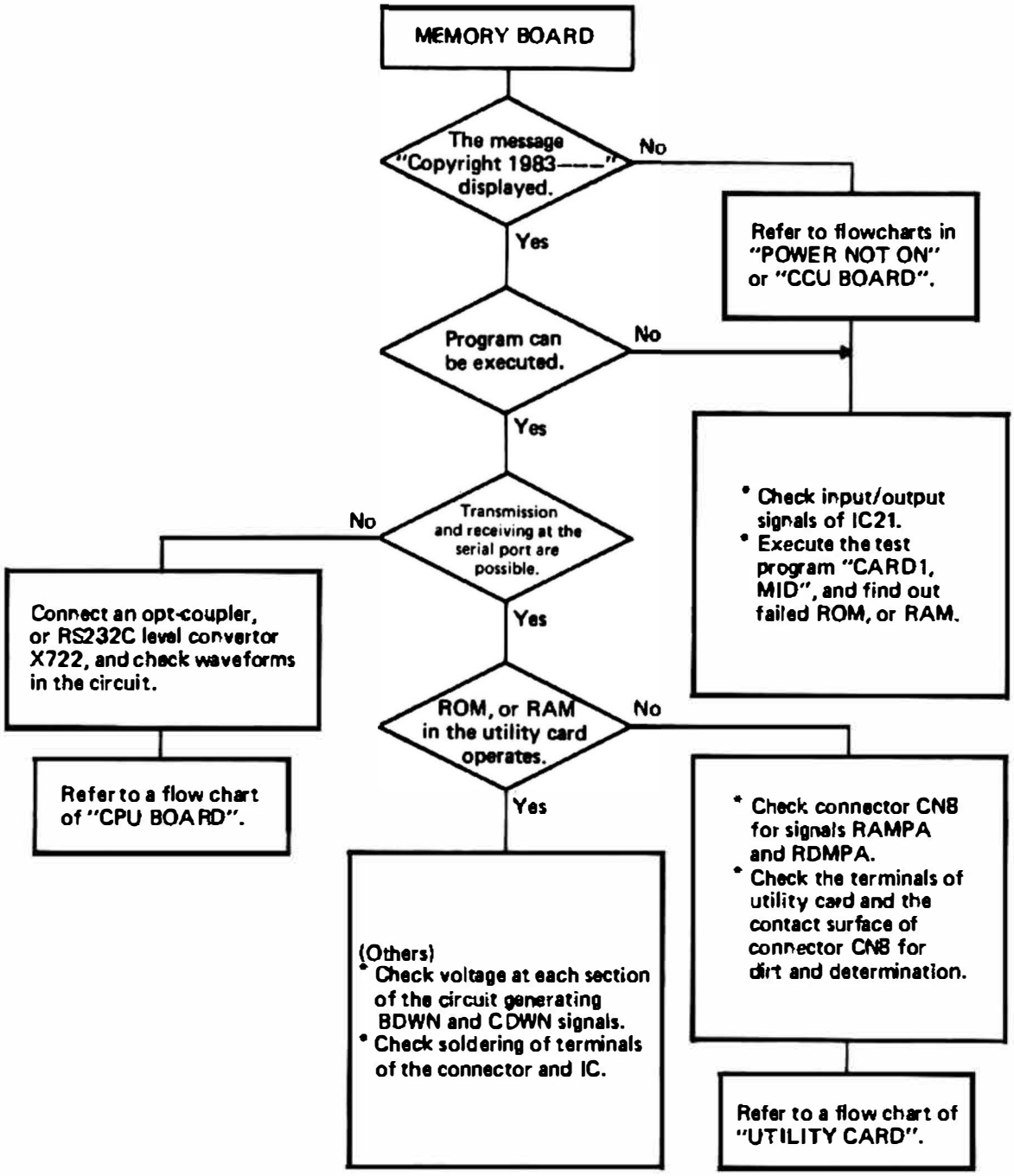
MEMORY BOARD
The message "Copyright 1983----" displayed.
No
Yes
Refer to flowcharts in "POWER NOT ON" or "CCU BOARD".
Program can be executed.
No
Yes
Transmission and receiving at the serial port are possible.
No
Yes
Connect an opt-coupler, or RS232C level convertor X722, and check waveforms in the circuit.
Refer to a flow chart of "CPU BOARD".
ROM, or RAM in the utility card operates.
No
Yes
* Check input/output signals of IC21.
* Execute the test program "CARD1, MID", and find out failed ROM, or RAM.
(Others)
* Check voltage at each section of the circuit generating BDWN and CDWN signals.
* Check soldering of terminals of the connector and IC.
* Check connector CN8 for signals RAMPA and RDMPA.
* Check the terminals of utility card and the contact surface of connector CN8 for dirt and determination.
Refer to a flow chart of "UTILITY CARD".

10. IC & TR TERMINALS

WA10357-000
DIODE MA153

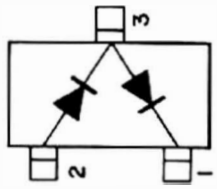

I forward: 0.2A
I rectified: 0.1A
V reverse: 40V

WA1-0380-000
DIODE MA157

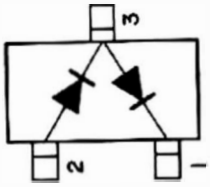

I forward: 0.225A
I rectified: 0.1A
V reverse: 40V

WA2-0113000
TR 2SC2603

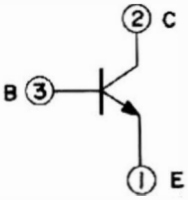

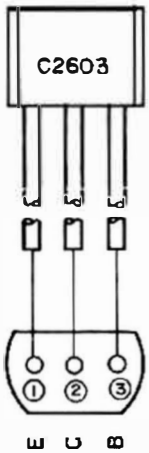

VCBO: 50V
VCBO: 6V
VCBO: 50V
IC: 200mA
PC: 300mW

WA2-0240-000
TR 2SA1115

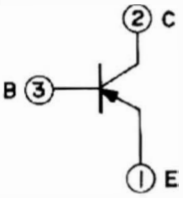

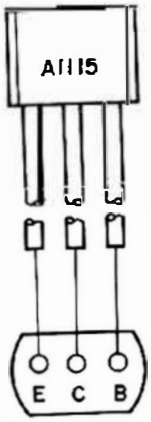

VCBO: -50V
VCBO: -6V
VCBO: -50V
IC: -200mA
PC: 300mW

WA2-0297-000
TR 2SB892

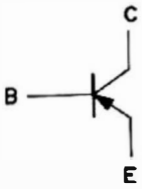

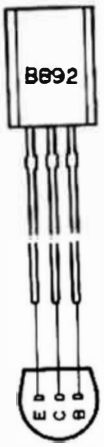

VCBO: -60V
VCBO: -6V
VCBO: -50V
IC: -2A
PC: 1W

WA2-0343-000
TR 2SC2712

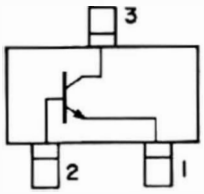

VCBO: 60V, VCBO: 50V
VCBO: 5V, IC: 150mA
PC: 150mW

WA2-0375-000
TR 2SJ120

① GATE
②,④ DRAIN
③ SOURCE

VDSS: -40V
VGSS: ±20V
ID: -2A
Pch: 10W

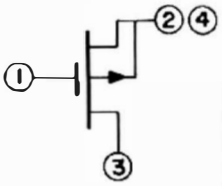

WA2-0399-000
TR ARRAY M54514AP

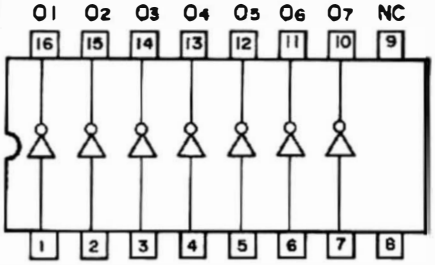

WA3-0800000 NAND GATE TC40H000F

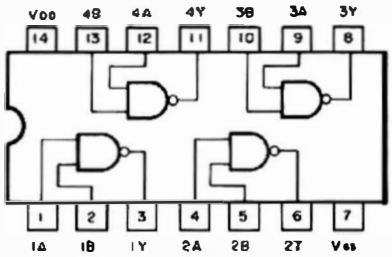

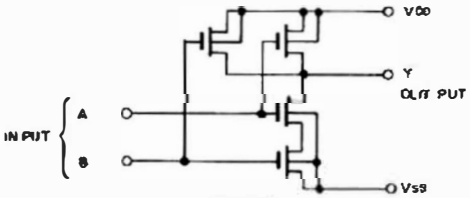

$Y = \overline{A \times B}$

WA3-0956-000
CPU NSC800

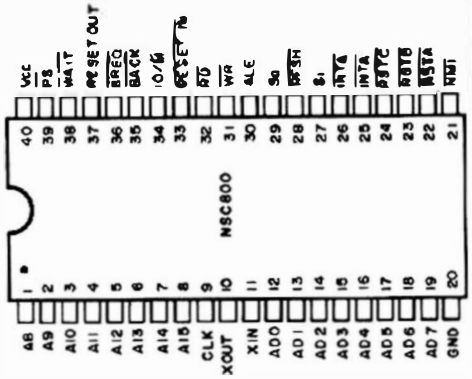

WA3-0957-000 INVERTER TC50H000F

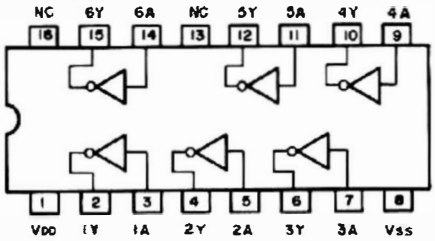

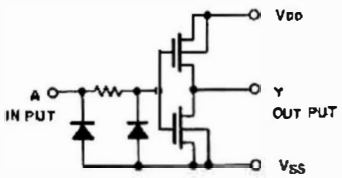

$Y = \overline{A}$

WA3-0955-000 STATIC RAM 2k byte HM6117LFP-4

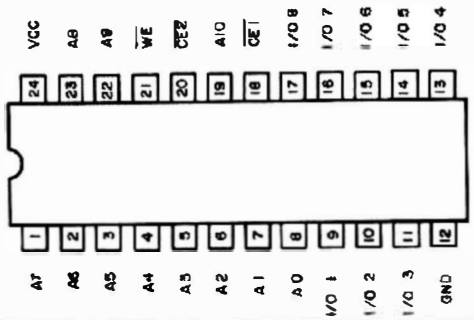

WA3-0958-000 DECODER TC40H138F

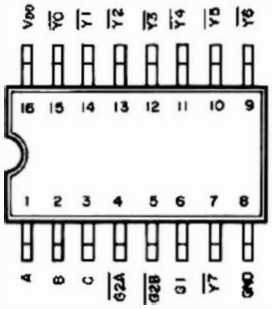

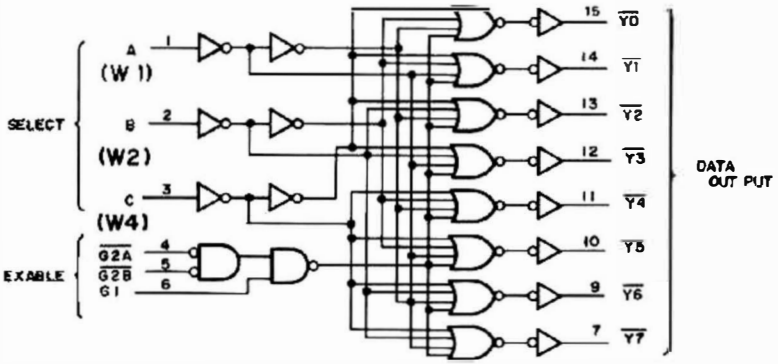

WA3-0959-000 DECODER TC40H139P

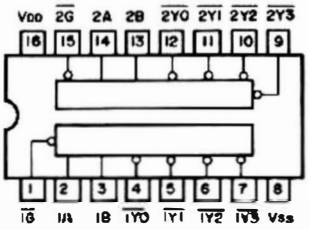

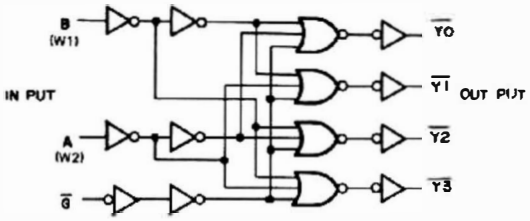

WA3-0960-000 8-bit SHIFT REGISTER (SERIAL-IN, PARALLEL-OUT) TC40H164F

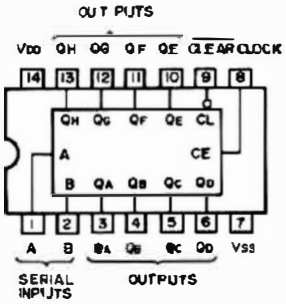

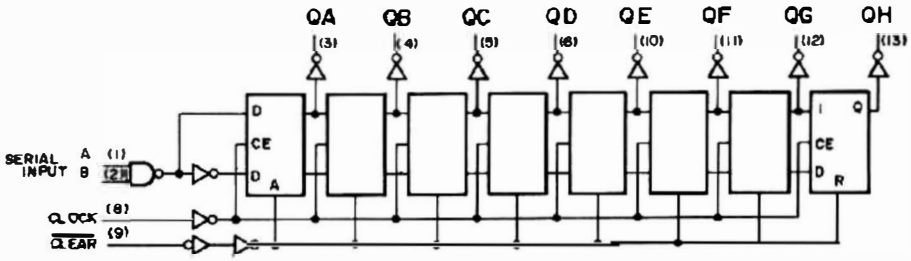

WA3-0963-000 TC40H032F

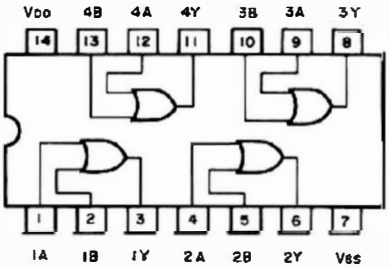

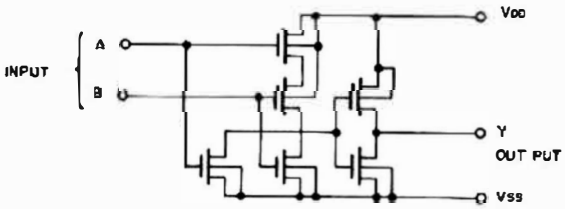

$Y = A + B$

WA3-0976-000
INVERTER HD14584B

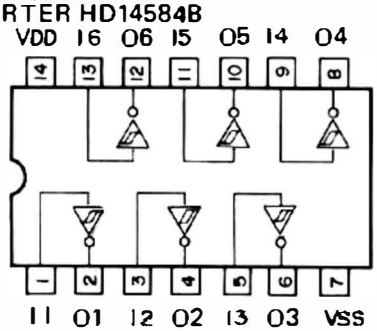

WA3-9168-000 4k-byte BASIC ROM
TC5332P (MASK ROM)

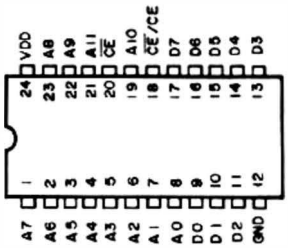

A0~A11: Address Input
D0~D7: Data Output
CE/CE: Chip Enable Input
OE: Output-Enable Input

WA3-9169-000 16k-byte BASIC ROM
HN613128FP (MASK ROM)

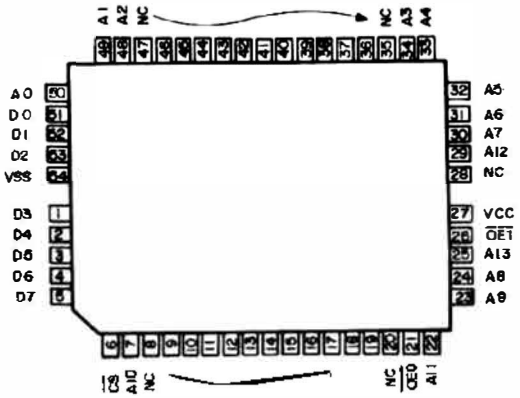

WA3-9170-000 INTERFACE LSI HD61L202F

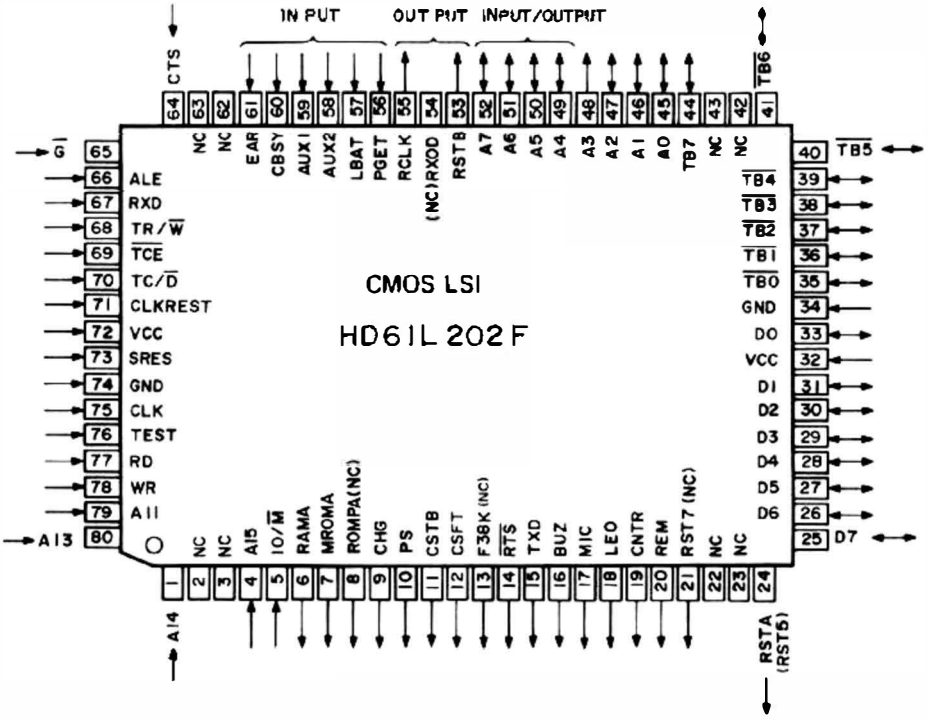

WA4-0261-000
CMOS VOLTAGE REGULATOR
ICL7663CPA

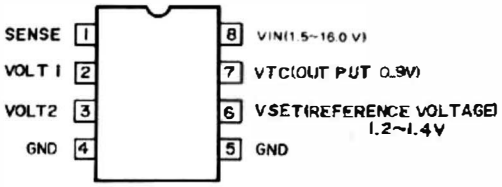

WA4-0283-000
AMPLIFIER μPC4250C

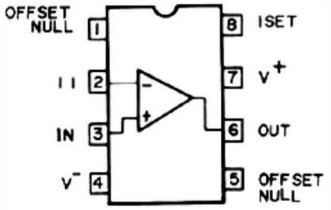

11. OPTION

TECHNICAL GUIDE

PARTS CATALOG

11-1 XM-100, XP-110, XP-120

EXPLODED VIEW

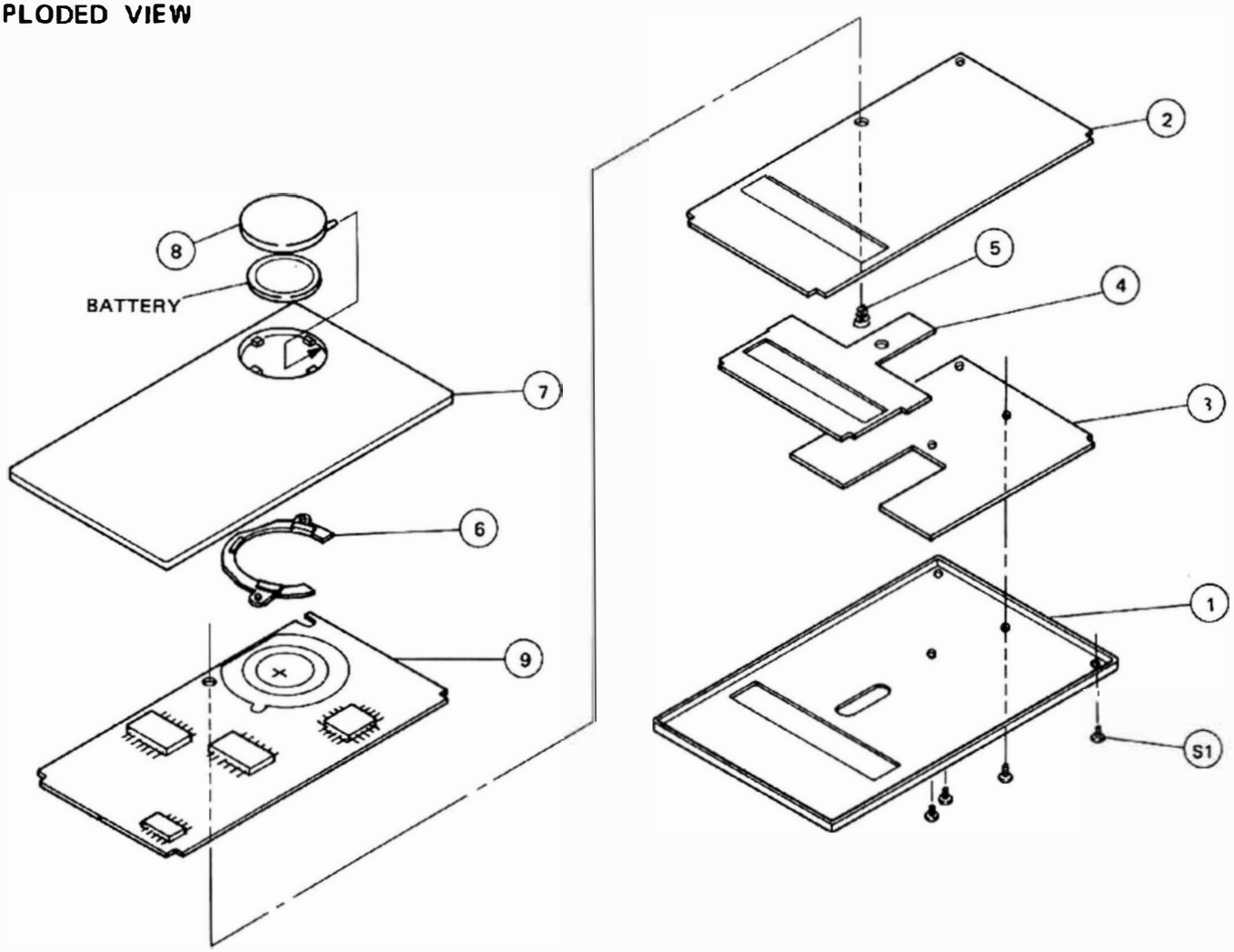

XP-120

N	KEY NO.	PART NO.	Q'TY	DESCRIPTION	REMARKS	PRICE
*	1	EA1-5080-000	1	LOWER COVER		
*	2	EA1-5081-000	1	SPACER		
*	3	EA1-5082-000	1	PLATE, GUIDE		
*	4	EA1-5084-000	1	PLATE, SHUTTER		
*	5	EA1-5135-000	1	SPRING, GND		
*	6	EA1-5155-000	1	TERMINAL, BATTERY		
*		EA1-8087-000	1	SOFT CASE		
*	7	EF1-0328-000	1	UPPER COVER UNIT		
*	8	EF9-0415-000	1	BATTERY COVER UNIT		
*	9	EH1-0677-000	1	P.C.B.		
*	C1	VC9-1113-000	1	TANTALUM CAPACITOR, 3.3uF 16V CHIP TYPE		
*	C2	VC9-1113-000	1	" " " " "		
*	C3	VC9-1113-000	1	" " " " "		
*	C4	VC9-1113-000	1	" " " " "		
	D1	WA1-0356-000	1	DIODE, HSM2837		
*	IC1	WA3-0961-000	1	CMOS IC, TC40H139F, DECORDER		
*	IC2	WA3-0962-000	1	CMOS LSI, TC5516AFL, RAM		
*	IC3	WA3-0962-000	1	" " "		
*	IC4	EH7-0087-000	1	CMOS LSI, HN61364FP4, ROM, "TABLE" DOM.		
	R1	VR9-1460-000	1	CHIP RESISTOR, 1M 1/8W		
	R2	VR9-1460-000	1	CHIP RESISTOR, 1M 1/8W		
	R3	VR9-1058-000	1	" , 100k 1/8W		
	R4	VR9-1059-000	1	" , 300k 1/8W		
	R5	VR9-1059-000	1	" , 300k 1/8W		
	S1	XA1-3170-257	6	SCREW, 1.7x2.5		

XM-100

N	KEY NO.	PART NO.	Q'TY	DESCRIPTION		REMARKS	PRICE	
*	2	EA1-5081-000	1	SPACER				
*	3	EA1-5082-000	1	PLATE, GUIDE				
*	4	EA1-5084-000	1	PLATE, SHUTTER				
*	5	EA1-5135-000	1	SPRING, GND				
*	1	EA1-5140-000	1	LOWER COVER				
*	6	EA1-5155-000	1	TERMINAL, BATTERY				
*		EA1-8087-000	1	SOFT CASE				
*	7	EF1-0330-000	1	UPPER COVER UNIT				
*	8	EF9-0415-000	1	BATTERY COVER UNIT				
*	9	EH1-0677-000	1	P.C.B.				
*	C1	VC9-1113-000	1	TANTALUM CAPACITOR, 3.3uF 16V	CHIP TYPE			
*	C2	VC9-1113-000	1	" " "	"			
*	C3	VC9-1113-000	1	" " "	"			
*	C4	VC9-1113-000	1	" " "	"			
	D1	WA1-0356-000	1	DIODE, HSM2837				
*	IC1	WA3-0961-000	1	CMOS IC, TC40H139F, DECORDER				
*	IC2	WA3-0962-000	1	CMOS LSI, TC5516AFL , RAM				
*	IC3	WA3-0962-000	1	" " "				
*	IC4	EH7-0089-000	1	CMOS LSI, HN61364FP4,ROM,"FILE"	DOM.			
	R1	VR9-1460-000	1	CHIP RESISTOR 1M 1/8W				
	R2	VR9-1460-000	1	CHIP RESISTOR 1M 1/8W				
	R3	VR9-1058-000	1	" " 100k 1/8W				
	R4	VR9-1059-000	1	" " 300k 1/8W				
	R5	VR9-1059-000	1	" " " "				
	S1	XA1-3170-257	6	SCREW, 1.7x2.5				

XP-110

N	KEY NO.	PART NO.	Q'TY	DESCRIPTION		REMARKS	PRICE	
*	2	EA1-5081-000	1	SPACER				
*	3	EA1-5082-000	1	PLATE, GUIDE				
*	4	EA1-5084-000	1	PLATE, SHUTTER				
*	5	EA1-5135-000	1	SPRING, GND				
*	1	EA1-5144-000	1	LOWER COVER				
*	6	EA1-5155-000	1	TERMINAL, BATTERY				
*		EA1-8087-000	1	SOFT CASE				
*	7	EF1-0332-000	1	UPPER COVER UNIT				
*	8	EF9-0415-000	1	BATTERY COVER UNIT				
*	9	EH1-0677-000	1	P.C.B.				
*	C1	VC9-1113-000	1	TANTALUM CAPACITOR, 3.3uF 16V	CHIP TYPE			
*	C2	VC9-1113-000	1	" "	"			
*	C3	VC9-1113-000	1	" "	"			
	D1	WA1-0356-000	1	DIODE, HSM2837				
*	IC1	WA3-0961-000	1	CMOS IC, TC40H139F, DECORDER				
*	IC2	WA3-0962-000	1	CMOS LSI, TC5516AFL, RAM				
*	IC3	WA3-0962-000	1	" " "				
	R1	VR9-1460-000	1	CHIP RESISTOR, 1M 1/8W				
	R2	VR9-1460-000	1	" "				
	R3	VR9-1058-000	1	" 100k 1/8W				
	R4	VR9-1059-000	1	CHIP RESISTOR, 300k 1/8W				
	S1	XA1-3170-257	6	SCREW, 1.7x2.5				

XM-100 RAM (4k) CARD CIRCUIT DIAGRAM

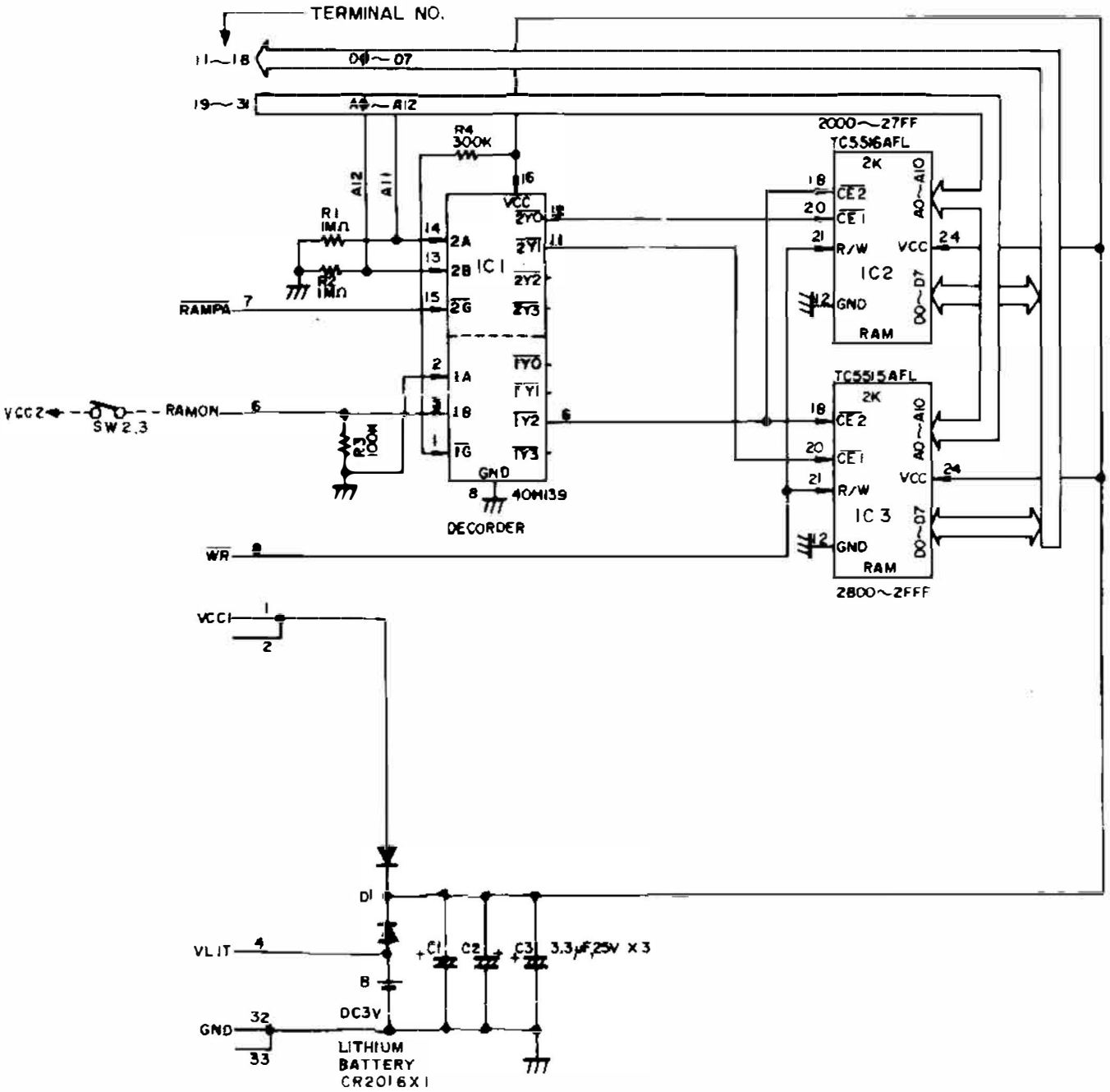

CARD LAYOUT

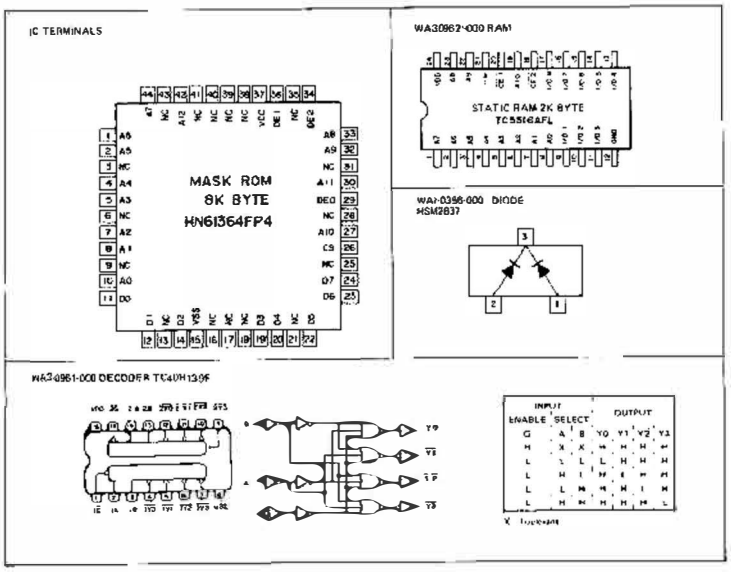

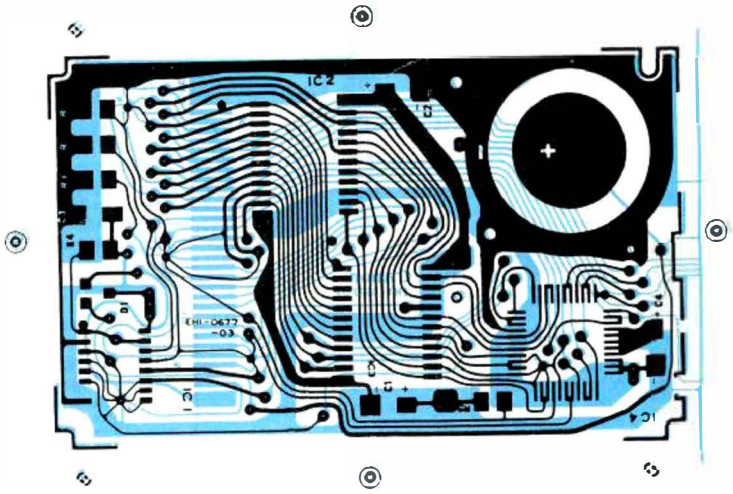

XP-110, XP-120
CIRCUIT DIAGRAM

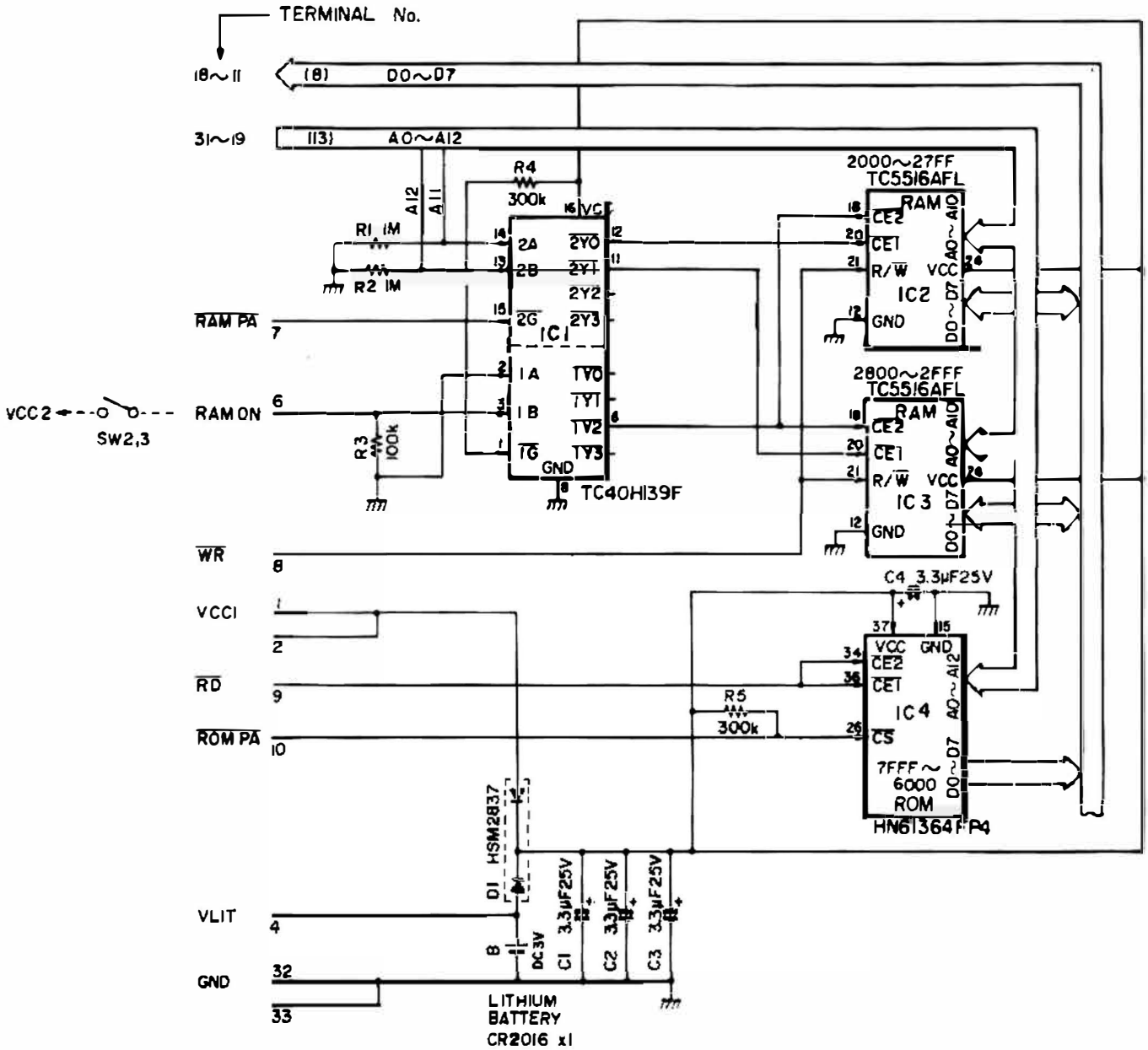

CARD LAYOUT

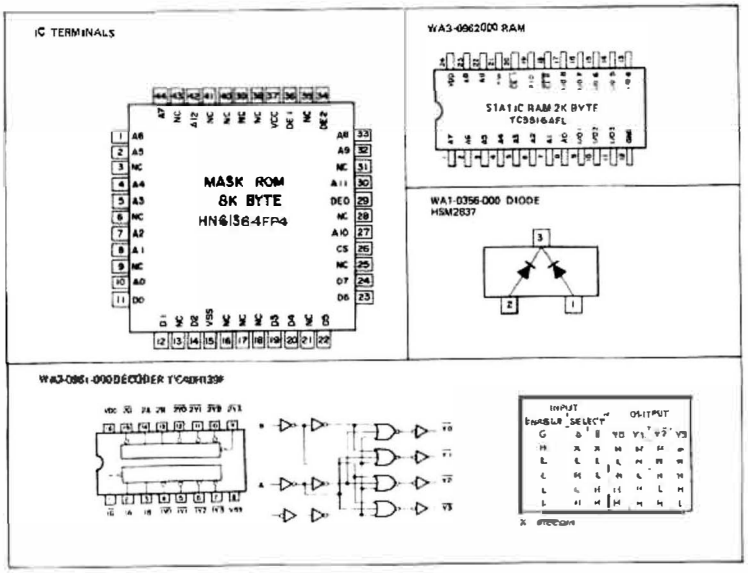

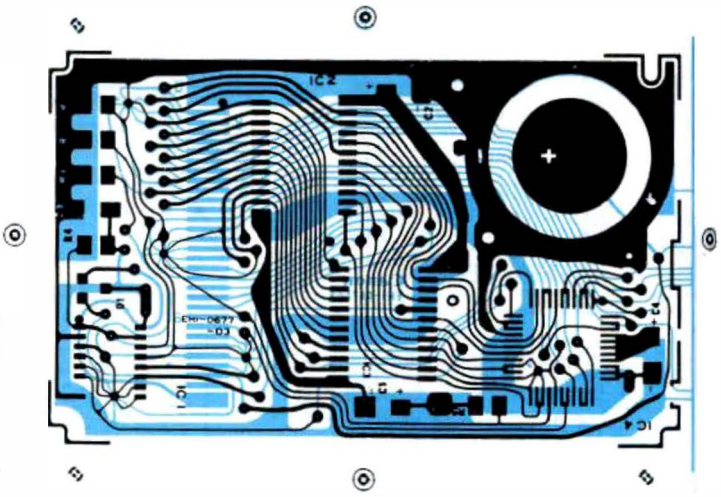

TROUBLESHOOTING

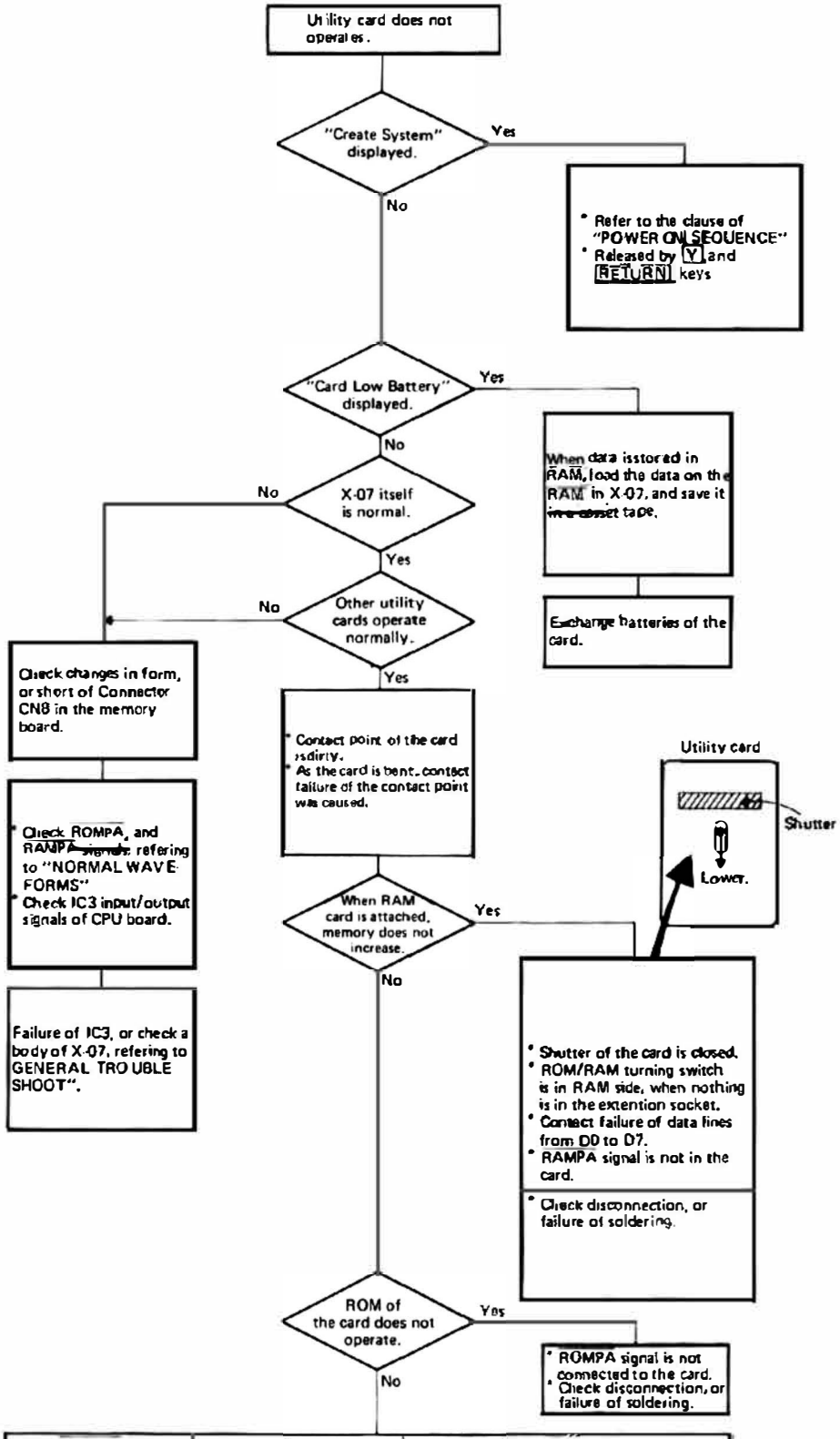

Phenomenon	Check	Repair
When power source is on, it can not be switched off by OFF key. (The message "Copyright 1983——" not displayed)	Signals from A0 to A12, and from D0 to D7 are kept being output.	• Press RESET switch and take out the card. Then, connect the package of card to GND, and observe terminals from A0 to A12, and from D0 to D7 with anoscilloscope. Check signals in "H". • Check which terminals' IC are "H". Then, remove the terminals, and exchange IC in "H".
The message "Copyright 1983——" is displayed when power is on, but RAM of the card does not operate normally.	Execute the check program "JMEM. X07".	Exchange RAMs of error addresses.

11-2 X-721

11-2) Optical Coupler X-721

EXPLODED VIEW

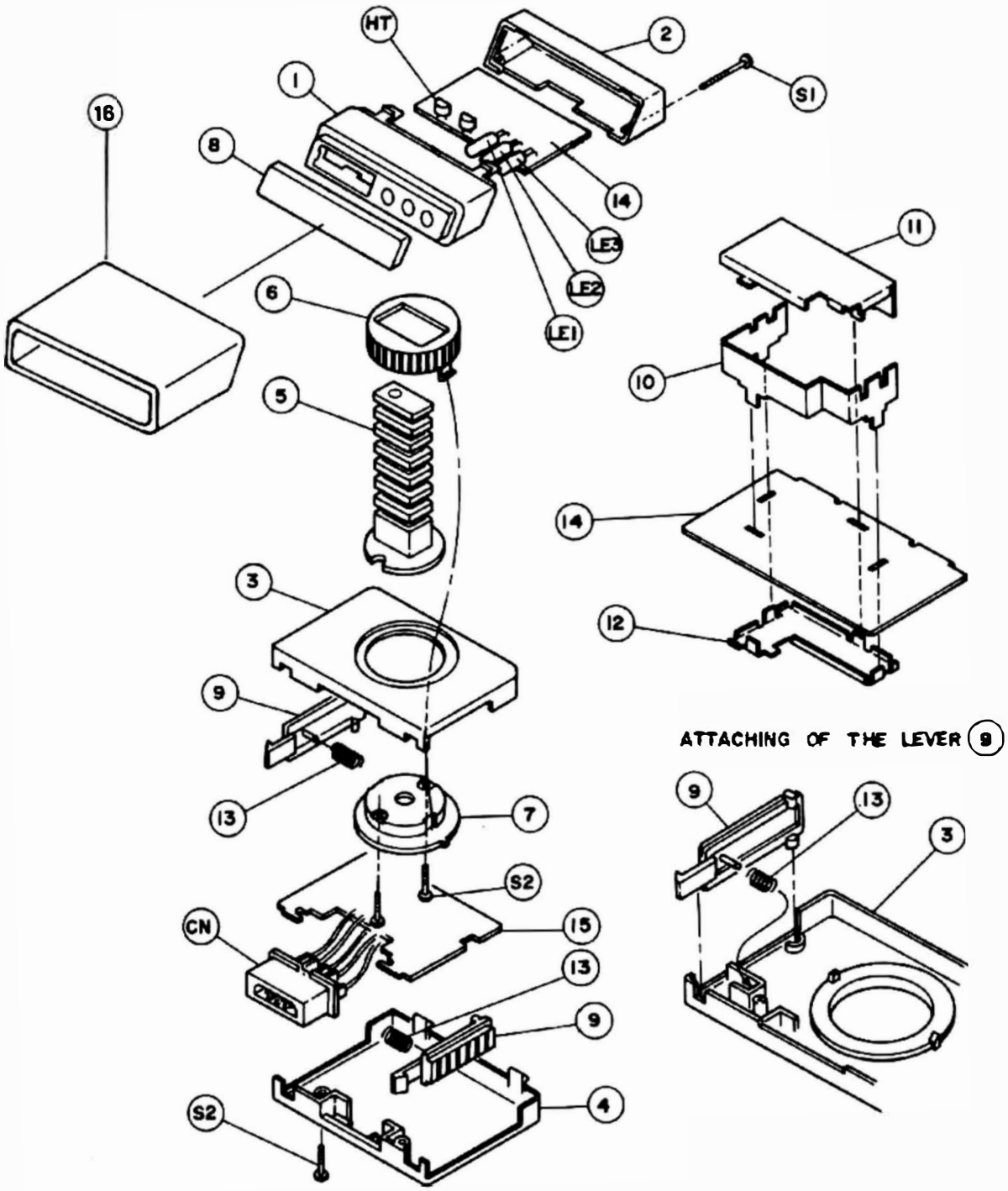

N	KEY NO.	PART NO.	Q'TY	DESCRIPTION	REMARKS	PRICE
*	1	EA1-5062-000	1	COVER(A)		
*	2	EA1-5063-000	1	COVER(B)		
*	3	EA1-5064-000	1	UPPER COVER,BASE		
*	4	EA1-5065-000	1	LOWER COVER,BASE		
*	5	EA1-5066-000	1	SNAKE SHAFT,RUBBER		
*	6	EA1-5067-000	1	BUSHING(A),ROTATORY		
*	7	EA1-5068-000	1	BUSHING(B),ROTATORY		
*	8	EA1-5069-000	1	ACRYL,WINDOW		
*	9	EA1-5070-000	2	LEVER,ATTACHING		
*	10	EA1-5071-000	1	PLATE,SHIELD		
*	11	EA1-5072-000	1	SHIELD COVER(A)		
*	12	EA1-5073-000	1	SHIELD COVER(B)		
*	13	EA1-5074-000	2	COIL SPRING		
*	14	EH1-0674-000	1	P.C.B, AMPLIFIER		
*	15	EH1-0675-000	1	P.C.B, POWER SUPPLY		
*	16	EA1-5348-000	1	HOOD, RUBBER		
*		EA1-5352-000	1	RUBBER SHEET, CONDUCTIVE		
*	C 1	VC9-1210-000	1	ELECTROLYTIC CAPACITOR 47uF 16V		
*	C 2	VC9-1112-000	1	ELECTROLYTIC CAPACITOR 10uF 16V		
	C 3					
	C 4	VC4-3503-271	1	CERAMIC CAPACITOR 270PF 50V		
*	C 5	VC9-1210-000	1	ELECTROLYTIC CAPACITOR 47uF 16V		
*	C 6	VC4-2502-820	1	CERAMIC CAPACITOR 82PF 50V		
	C 7					
	C 8	VC4-2502-470	1	CERAMIC CAPACITOR 47PF 50V		
	C 9	VC4-2502-470	1	CERAMIC CAPACITOR 47PF 50V		
	CF	WK2-9002-000	1	CERAMIC FILTER 422.4kHz		
*	CN	WS1-0222-000	1	CONNECTOR, 9P		
	D 1	X65-5032-000	1	DIODE, 1S1588		
	D 2	X65-5032-000	1	DIODE, 1S1588		
	D 3	X65-5032-000	1	DIODE, 1S1588		
	D 4	X65-5032-000	1	DIODE, 1S1588		
	D 5	X65-5032-000	1	DIODE, 1S1588		

N	KEY NO.	PART NO.	Q'TY	DESCRIPTION	REMARKS	PRICE
	HT1	WG3-0025-000	1	PHOTO DIODE, PD-41PI		
	HT2	WG3-0025-000	1	PHOTO DIODE, PD-41PI		
	IC1	WA4-0262-000	1	CMOS IC L7660CPA		
	IC2	WA4-0263-000	1	CMOS IC L7611DCPA		
	IC3	WA3-0982-000	1	CMOS IC TC4093BF		
	IC4	WA4-0260-000	1	CMOS IC HD44042		
*	LE1	WG1-0189-000	1	LED TLN110		
	LE2	WG1-0171-000	1	LED GL-520		
*	LE3	WG1-0189-000	1	LED TLN110		
	R 1	VR1-8143-331	1	SOLID RESISTOR 330 ohm 1/4W		
	R 2	VR1-8143-102	1	SOLID RESISTOR 1k 1/4W		
	R 3					
	R 4					
	R 5	VR1-8143-105	1	SOLID RESISTOR 1M 1/4W		
	R 6	VR9-2980-000	1	RESISTOR 390k 1/4W		
	R 7	VR9-2779-000	1	RESISTOR 150k 1/4W		
	R 8	VR1-8143-563	1	SOLID RESISTOR 56k 1/4W		
	R 9	VR1-1143-125	1	CARBON RESISTOR 1.2M 1/4W		
	R10	VR1-8143-563	1	SOLID RESISTOR 56k 1/4W		
	R11	VR9-1037-000	1	RESISTOR 22k 1/4W		
	R12	VR1-1143-309	1	CARBON RESISTOR 3 ohm 1/4W		
	TR1	X65-6369-000	1	TRANSISTOR 2SD467		
	ZD1	WA1-0287-000	1	ZENER DIODE HZ2LLB		
		SCREW				
	S 1	XA9-0183-000	2	SCREW, TAPPING, M2x28		
	S 2	XA3-1201-007	4	SCREW, TAPPING, PH2x10		

CIRCUIT DIAGRAM

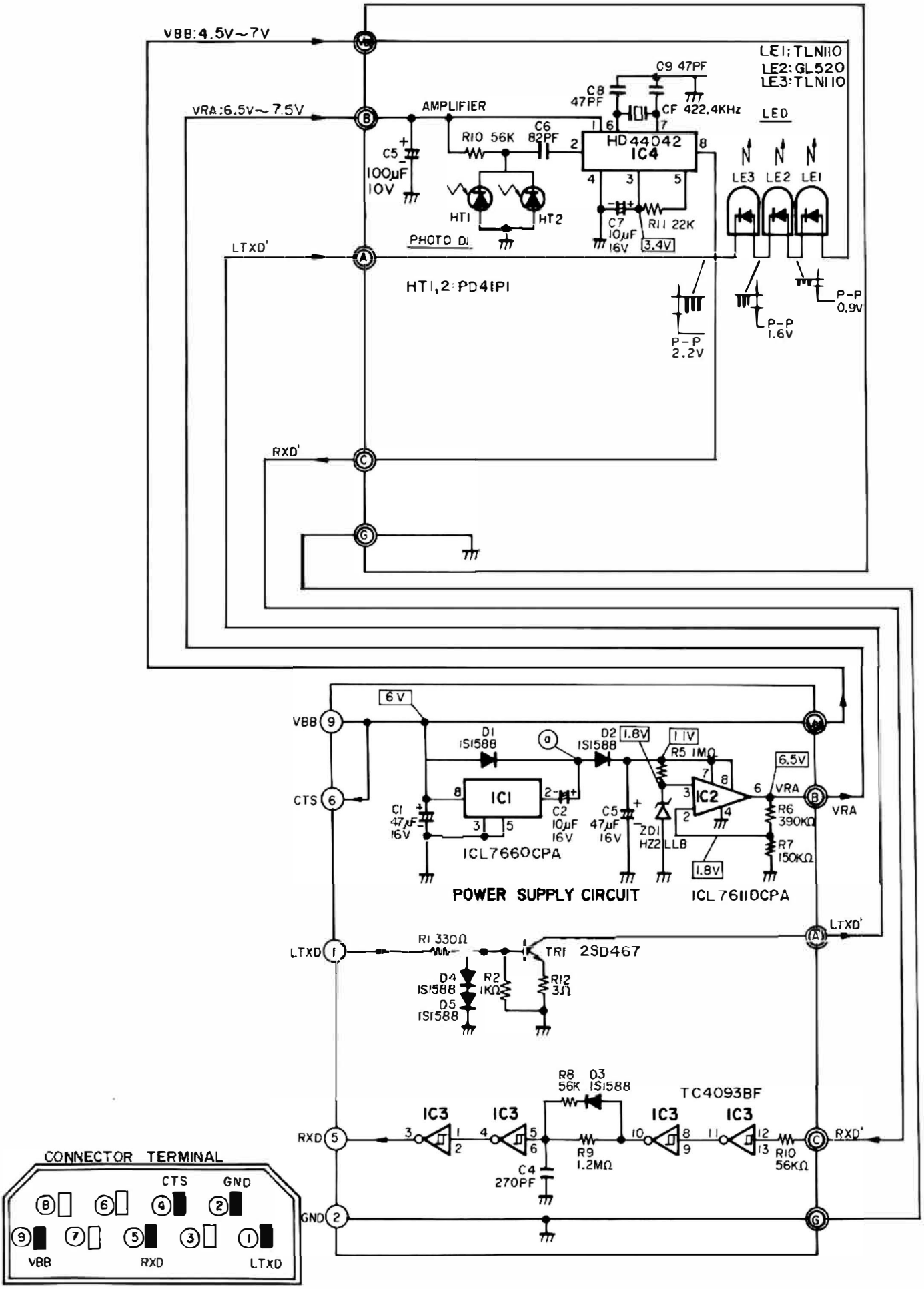
VBB:4.5V~7V
VRA:6.5V~7.5V
LTXD'
RXD'
AMPLIFIER
C5 100μF 10V
R10 56K
C6 82PF
HD44042 IC4
C8 47PF
C9 47PF
CF 422.4KHz
HT1
HT2
PHOTO DI
C7 10μF 16V
R11 22K
3.4V
HT1,2:PD41P1
LE1:TLN110
LE2:GL520
LE3:TLN110
LED
LE3 LE2 LE1
P-P 2.2V
P-P 1.6V
P-P 0.9V
VBB
CTS
LTXD
RXD
GND
6V
D1 1S1588
D2 1S1588
1.8V
1.1V
R5 1MΩ
6.5V
VRA
C1 47μF 16V
IC1
C2 10μF 16V
C5 47μF 16V
ZD1 HZ2LLB
IC2
R6 390KΩ
R7 150KΩ
ICL7660CPA
ICL7611DCPA
POWER SUPPLY CIRCUIT
R1 330Ω
TR1 2SD467
D4 1S1588
D5 1S1588
R2 1KΩ
R12 3Ω
R8 56K
D3 1S1588
TC4093BF
IC3
R9 1.2MΩ
C4 270PF
R10 56KΩ
CONNECTOR TERMINAL
CTS
GND
VBB
RXD
LTXD

NORMAL WAVEFORM

OPT-COUPLER (RECEIVE)

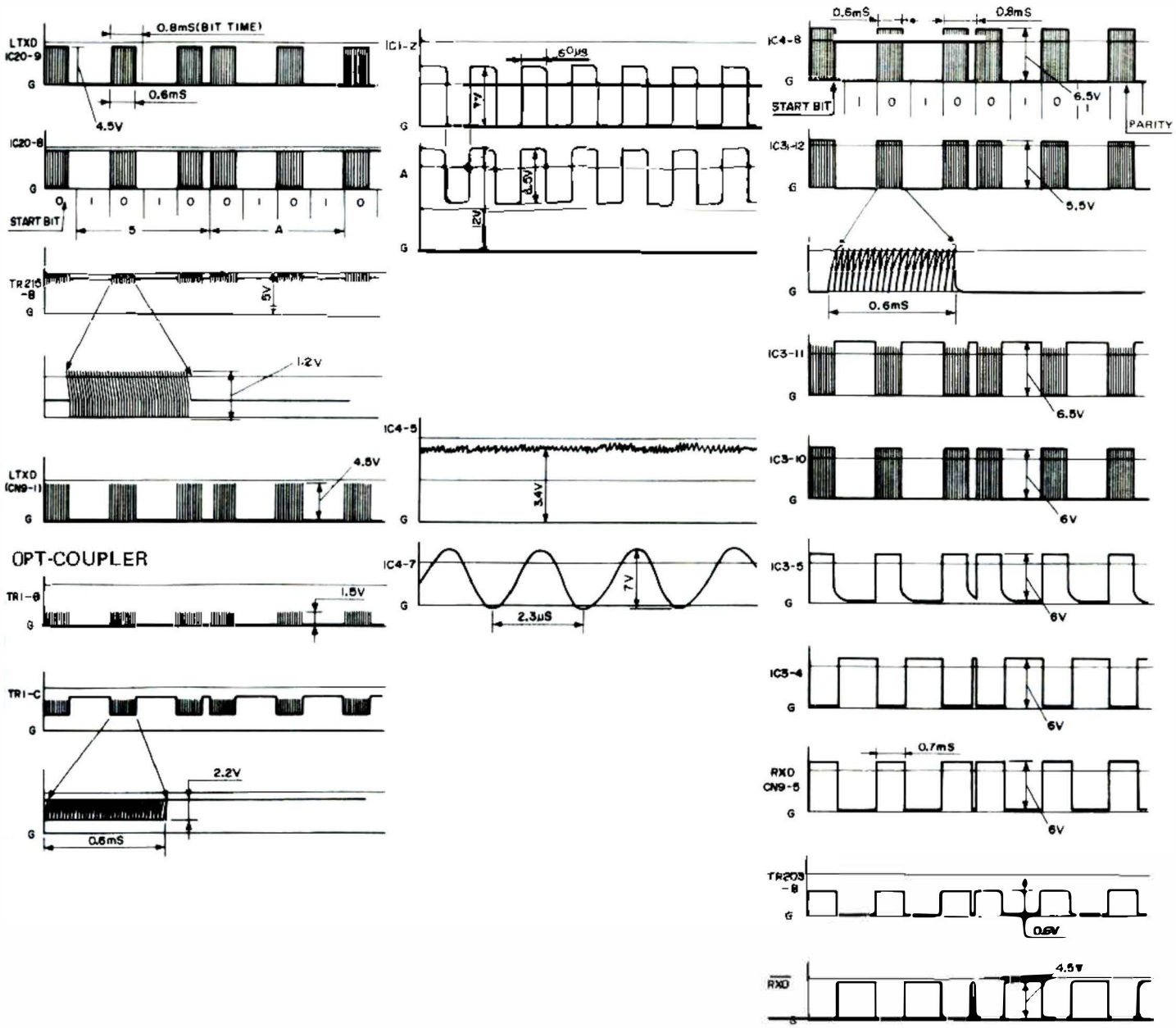

CARD LAYOUT

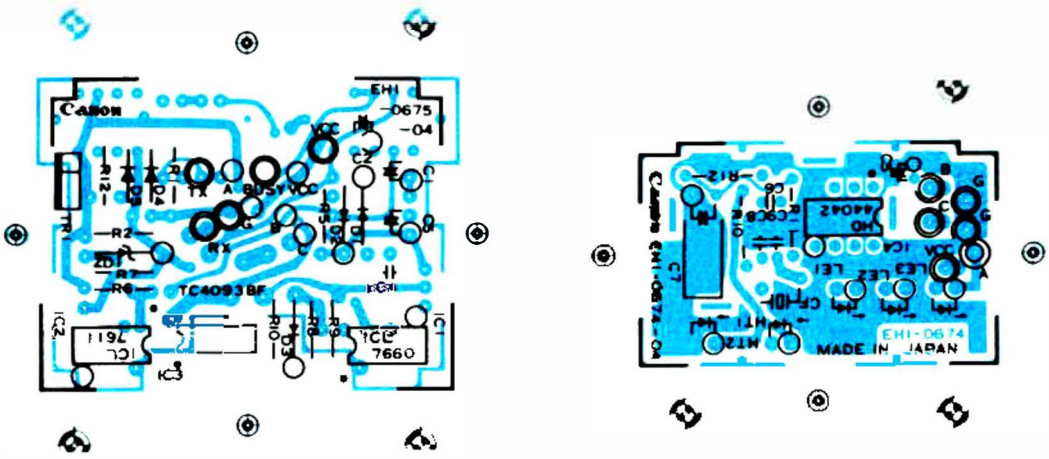

TROUBLESHOOTING

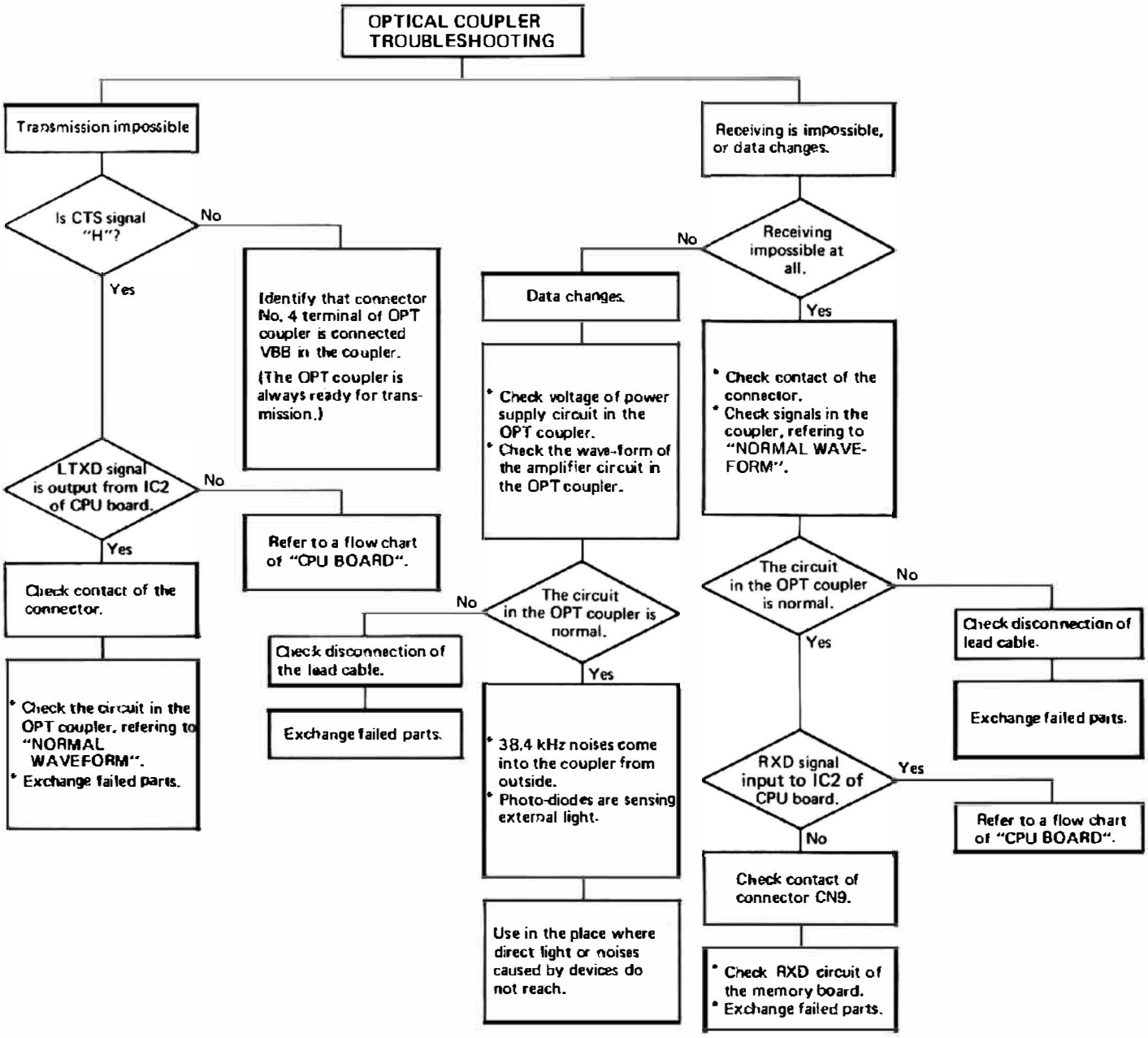

IC TERMINALS

WA3-0982-000
CMOS TC4093BF NAND GATE

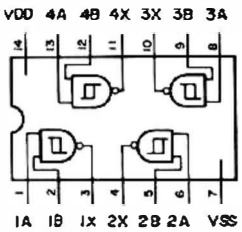

WA4-0260-000
HD44042 PREAMPLIFIER

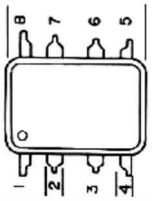

CLOCK FREQUENCY
455kHz

WA4-0263-000
ICL7611DCPA AMPLIFIER

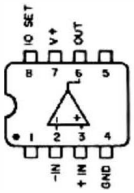

WA4-0262-000
ICL7660CPA VOLTAGE CONVERTER

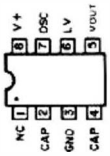

11-3 X-722

11-3) RS232-C LEVEL CONVERTER X-722

EXPLODED VIEW

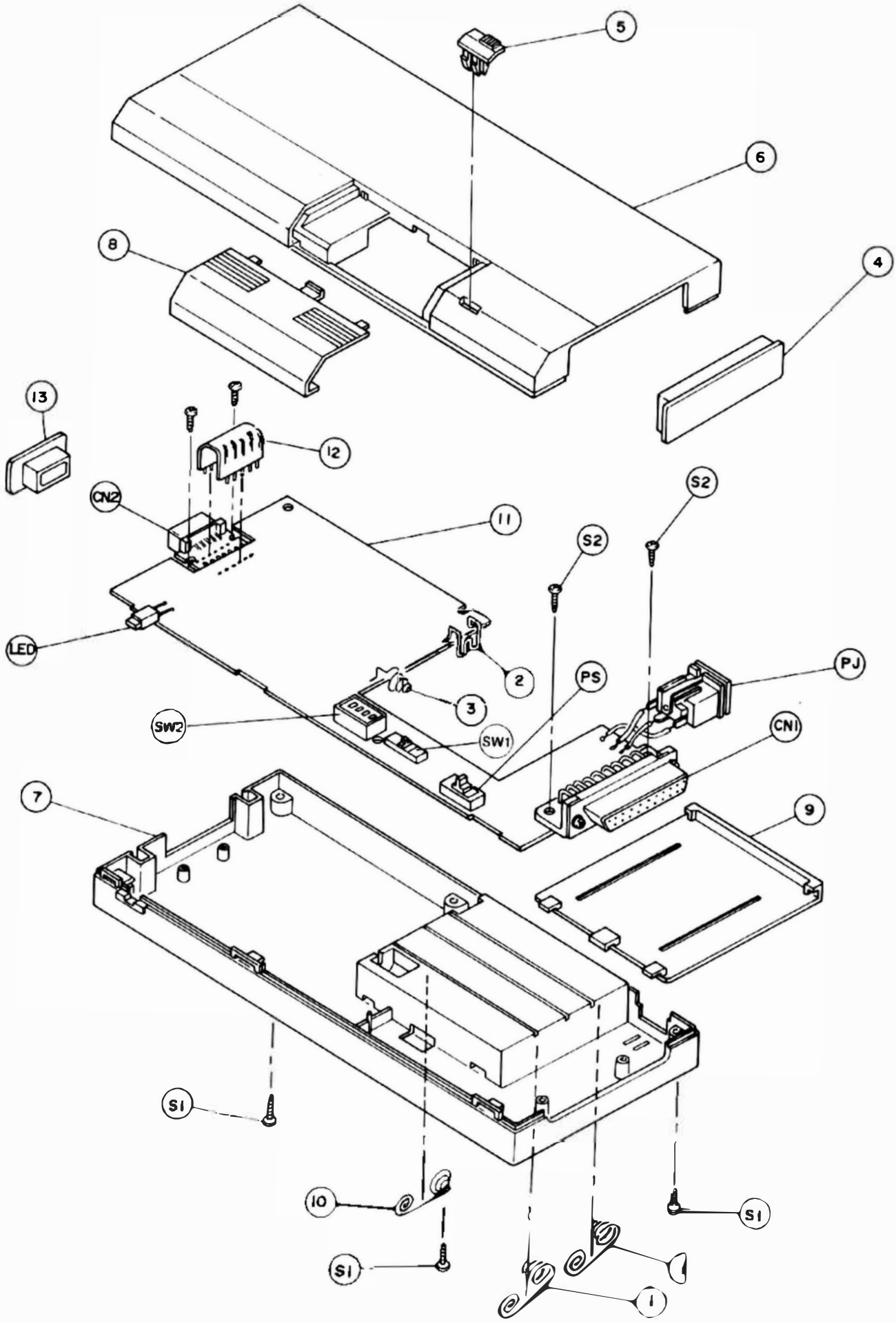

N	KEY NO.	PART NO.	Q'TY	DESCRIPTION	REMARKS	PRICE
	1	EA1-3750-000	2	TERMINAL, BATTERY,C1		
	2	EA1-4560-000	1	TERMINAL(+)		
	3	EA1-4561-000	1	" (-)		
	4	EA1-4866-000	1	CAP,CONNECTOR		
*	5	EA1-5061-000	1	KNOB,SWITCH		
*	6	EA1-5075-000	1	UPPER COVER		
*	7	EA1-5076-000	1	LOWER COVER		
*	8	EA1-5077-000	1	COVER, SWITCH		
*	9	EA1-5136-000	1	BATTERY COVER		
*		EA1-5318-000	1	PLATE(C),SHIELD		
	10	EA9-0119-000	1	TERMINAL,BATTERY,C2		
*	11	EH1-0676-000	1	P.C.B.		
*	12	EH2-0398-000	1	FLAT CABLE,8P		
*	13	WS9-0025-000	1	CAP,CONNECTOR		
	C1	VC9-1124-000	1	ELECTROLYTIC CAPACITOR,330uF 16V		
	C2	VC9-0822-000	1	ELECTROLYTIC CAPACITOR,47uF 16V		
	C3	VC9-0834-000	1	" ,33uF 16V		
	C4	VC9-1125-000	1	" ,22uF 16V		
	C5	VC4-3503-222	1	CERAMIC CAPACITOR 2200PF 50V		
*	C6	VC4-3503-101	1	" 100PF 50V		
*	C7	VC4-3503-101	1	CERAMIC CAPACITOR 100PF 50V		
*	C11	VC4-2502-820	1	CERAMIC CAPACITOR 82PF 50V		
	CF	WK2-9005-000	1	CERAMIC FILTER 460.8kHz		
*	CN1	VS1-0158-025	1	CONNECTOR,25P		
*	CN2	WS1-0221-000	1	" , 9P		
	D1	X65-5032-000	1	DIODE,1S1588		
	D2	X65-5032-000	1	" "		
	D3	X65-5032-000	1	" "		
	D4	X65-5032-000	1	" "		
	D5	WA1-0078-000	1	" ,ERB12-01		
	D6	WA1-0204-000	1	DIODE,1S954		
	D7	WA1-0267-000	1	" ,W06B		
	D8	WA1-0204-000	1	" ,1S954		

N	KEY NO.	PART NO.	Q'TY	DESCRIPTION	REMARKS	PRICE
	D9	X65-5032-000	1	DIODE,1S1588		
	D11	X65-5032-000	1	" , "		
	D12	X65-5032-000	1	" , "		
	D13	X65-5032-000	1	" , "		
	IC2	WA3-0311-000	1	CMOS IC,TC4029BP		
	IC5	WA3-0633-000	1	CMOS IC,HD14011BP		
	IC6	WA3-0561-000	1	CMOS IC,TC4069BP		
	LED1	WG1-0178-000	1	LED,PR4632K		
	PJ	WS6-9010-000	1	POWER JACK		
	PS	WC3-9013-000	1	SLIDE SWITCH,2P		
	R 1	VR1-8143-102	1	SOLID RESISTOR 1k 1/4W		
	R 2	VR1-8143-102	1	" 1k 1/4W		
	R 3	VR1-8143-102	1	" 1k 1/4W		
	R 4	VR1-8143-473	1	" 47k 1/4W		
	R 5	VR1-8143-473	1	" 47k 1/4W		
	R 6	VR1-8143-473	1	SOLID RESISTOR 47k 1/4W		
	R 7	VR1-8143-103	1	" 10k 1/4W		
	R 8	VR1-8143-473	1	" 47k 1/4W		
	R 9	VR1-8143-473	1	" 47k 1/4W		
	R10	VR1-8143-473	1	" 47k 1/4W		
	R11	VR1-8143-102	1	SOLID RESISTOR 1k 1/4W		
	R12					
	R13					
	R14	VR1-8143-103	1	SOLID RESISTOR 10k 1/4W		
	R15					
	R16	VR1-8143-105	1	SOLID RESISTOR 1M 1/4W		
	R17	VR1-8143-272	1	" 2.7k 1/4W		
	R18	VR1-8143-100	1	" 10 ohm 1/4W		
	R19	VR1-8143-104	1	" 100k 1/4W		
	R20					
	R21					
	R22	VR1-8143-473	1	SOLID RESISTOR 47k 1/4W		
	R23	VR1-8143-473	1	" 47k 1/4W		

N	KEY NO.	PART NO.	Q'TY	DESCRIPTION	REMARKS	PRICE
	R24	VR1-8143-473	1	SOLID RESISTOR 47k 1/4W		
	R25	VR1-8143-473	1	" 47k 1/4W		
	R26	VR1-8143-102	1	" 1k 1/4W		
	R27	VR1-8143-102	1	" 1k 1/4W		
	R28	VR1-8143-103	1	" 10k 1/4W		
	R29	VR1-8143-103	1	SOLID RESISTOR 10k 1/4W		
	R30					
	R31					
	R32	VR1-8143-103	1	SOLID RESISTOR 10k 1/4W		
	R33	VR1-8143-103	1	" 10k 1/4W		
	R34	VR1-8143-472	1	SOLID RESISTOR 4.7k 1/4W		
	R35	VR1-8143-511	1	" 510 ohm 1/4W		
	R36	VR1-8143-103	1	" 10k 1/4W		
	R37	VR1-8143-101	1	" 100 ohm 1/4W		
	R38	VR1-8143-333	1	" 33k 1/4W		
	R39	VR1-8143-333	1	SOLID RESISTOR 33k 1/4W		
	R40	VR1-8143-563	1	" 56k 1/4W		
*	SW1	WC3-0049-000	1	SWITCH,4P		
*	SW2	WC8-0049-000	1	SWITCH,DIP TYPE ,4P		
	T	EH3-5128-000	1	DC-DC CONVERTOR TRANS. TB-69		
	TR1	WA2-0374-000	1	TRANSISTOR 2SD789D		
	TR2	WA2-0282-000	1	" 2SA844C		
	TR3	WA2-0282-000	1	" "		
	TR3	WA2-0282-000	1	" "		
	TR4	WA2-0282-000	1	" "		
	TR5	WA2-0282-000	1	TRANSISTOR 2SA844C		
	TR6	WA2-0282-000	1	" "		
	TR7	WA2-0282-000	1	" "		
	TR8	WA2-0113-000	1	" 2SC2603(D,E,F)		
	TR9	WA2-0113-000	1	" "		
	TR10	WA2-0113-000	1	TRANSISTOR 2SC2603(D,E,F)		
	TR11	WA2-0282-000	1	" 2SA844C		

N	KEY NO.	PART NO.	Q'TY	DESCRIPTION	REMARKS	PRICE
	ZD1	WA1-0230-000	1	ZENER DIODE,HZ12-B1		
		SCREW				
		XA9-0178-000	1	SCREW,2.6x5		
		XB3-1261-007	3	SCREW,TAPPING,2.6x10		
		XB3-2301-007	2	" " 3x10		

CIRCUIT DIAGRAM

CIRCUIT DIAGRAM

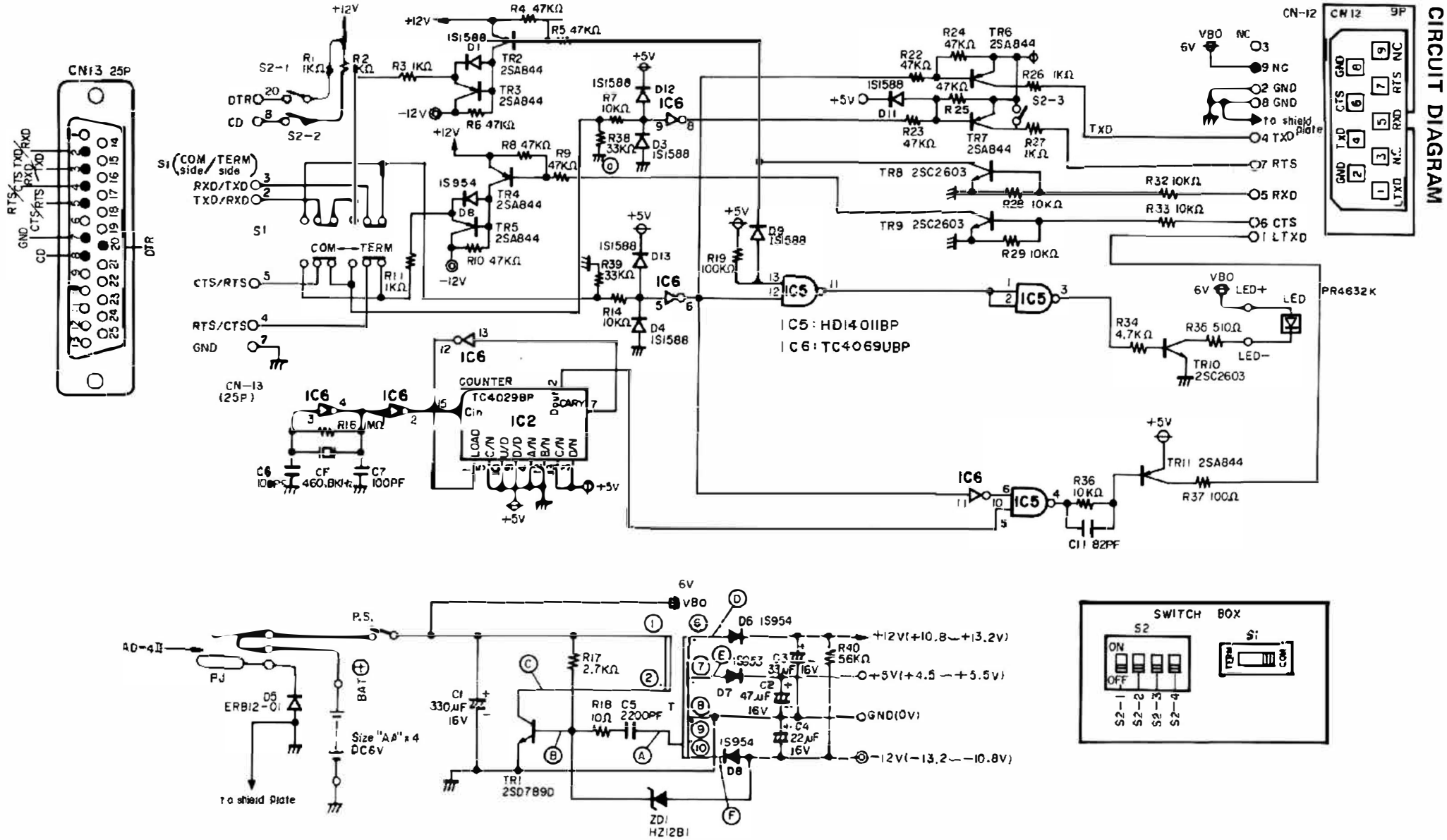

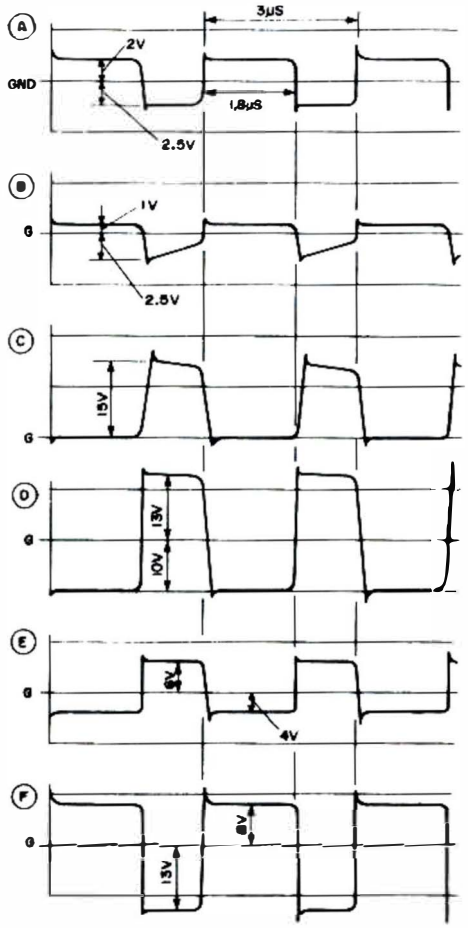
A
3μS
2V
GND
1.8μS
2.5V
B
1V
G
2.5V
C
15V
G
D
13V
10V
G
E
8V
G
4V
F
8V
G
13V

CARD LAYOUT

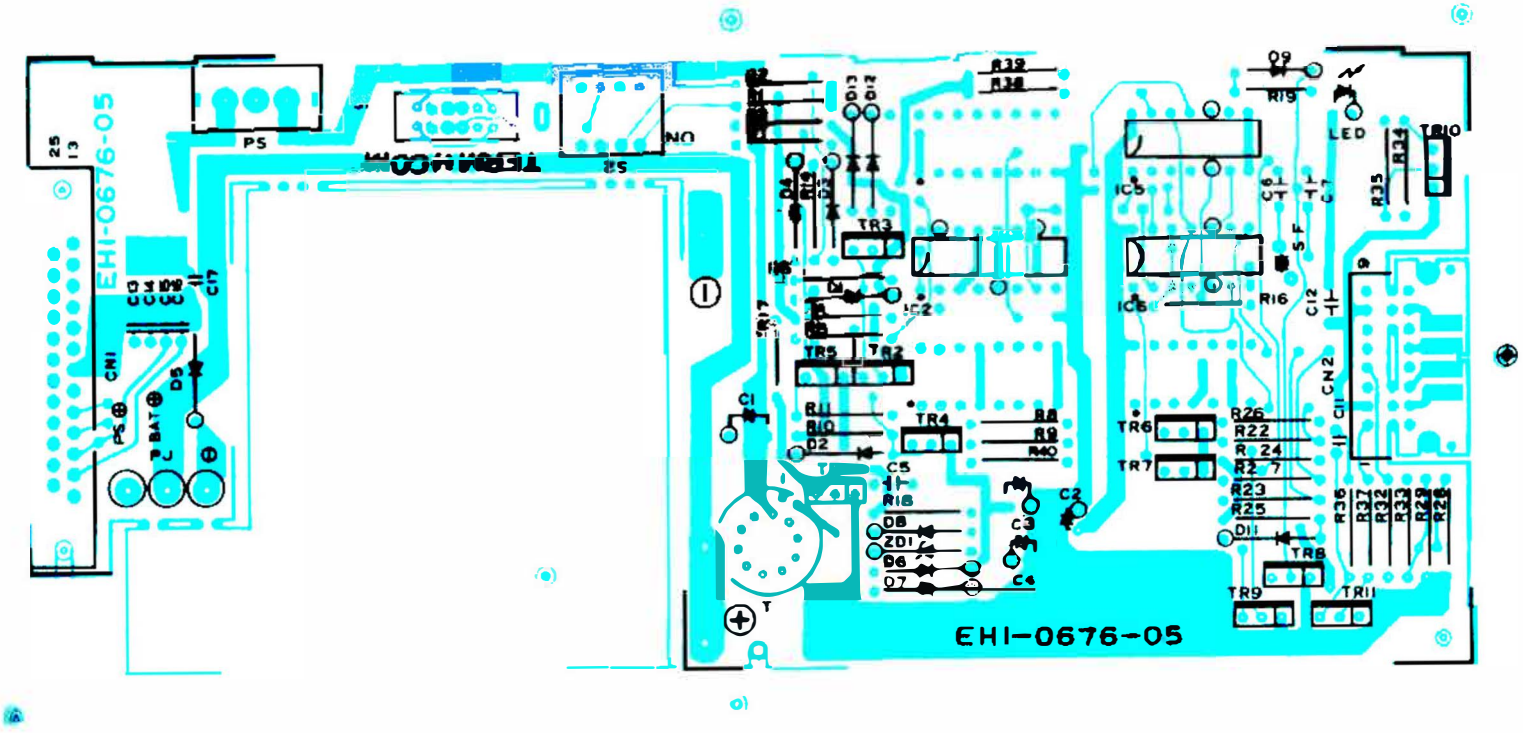
EHI-0676-05
PS
S2
ON
LED
TR3
TR4
TR5
TR2
TR6
TR7
TR8
TR9
TR11
TR10
IC2
IC5
IC6
CN1
CN2
EHI-0676-05

NORMAL WAVEFORM-1

RTS/CTS (Connected No. 4 & No. 5 terminals of CN1)

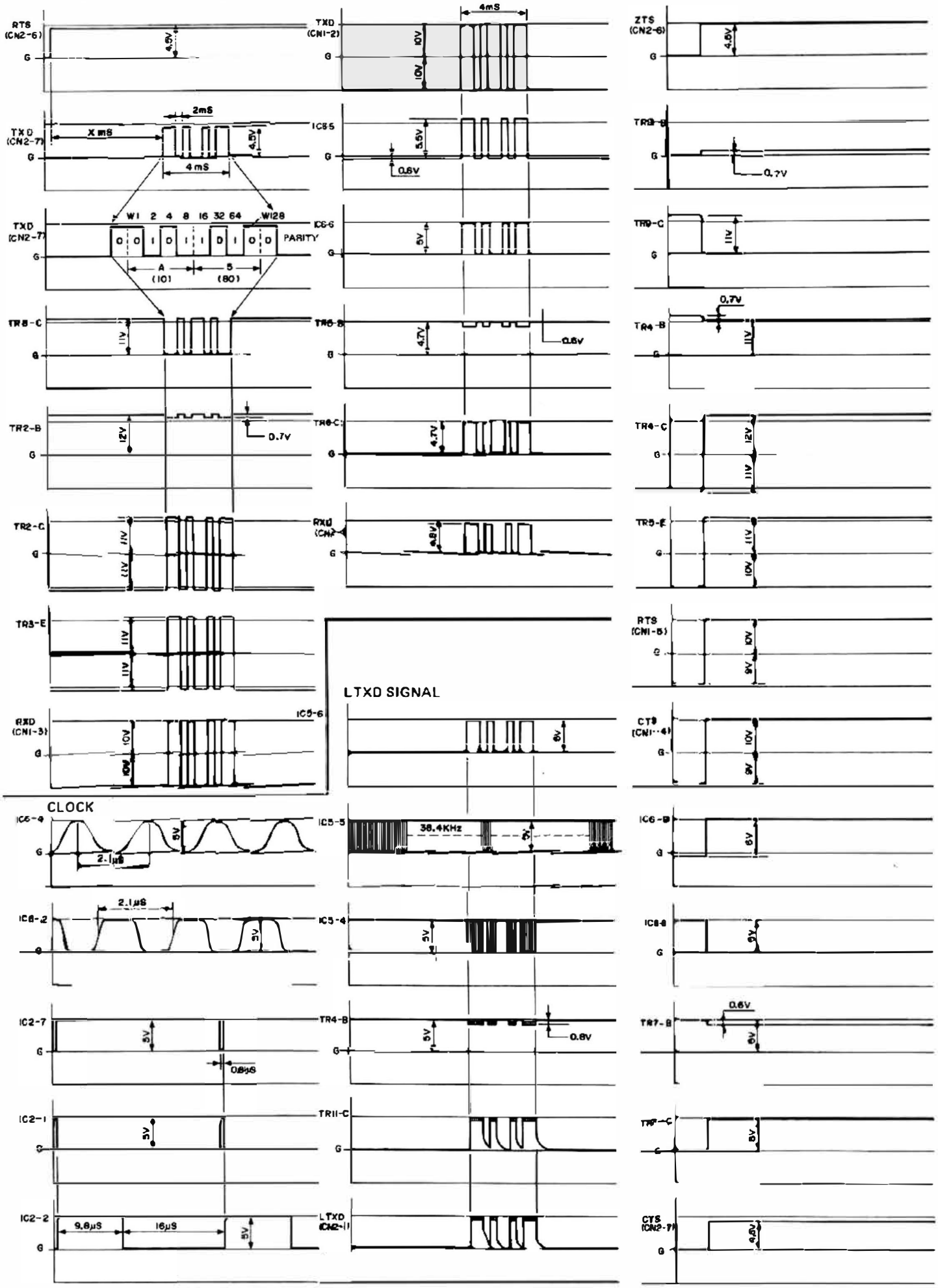

TROUBLESHOOT

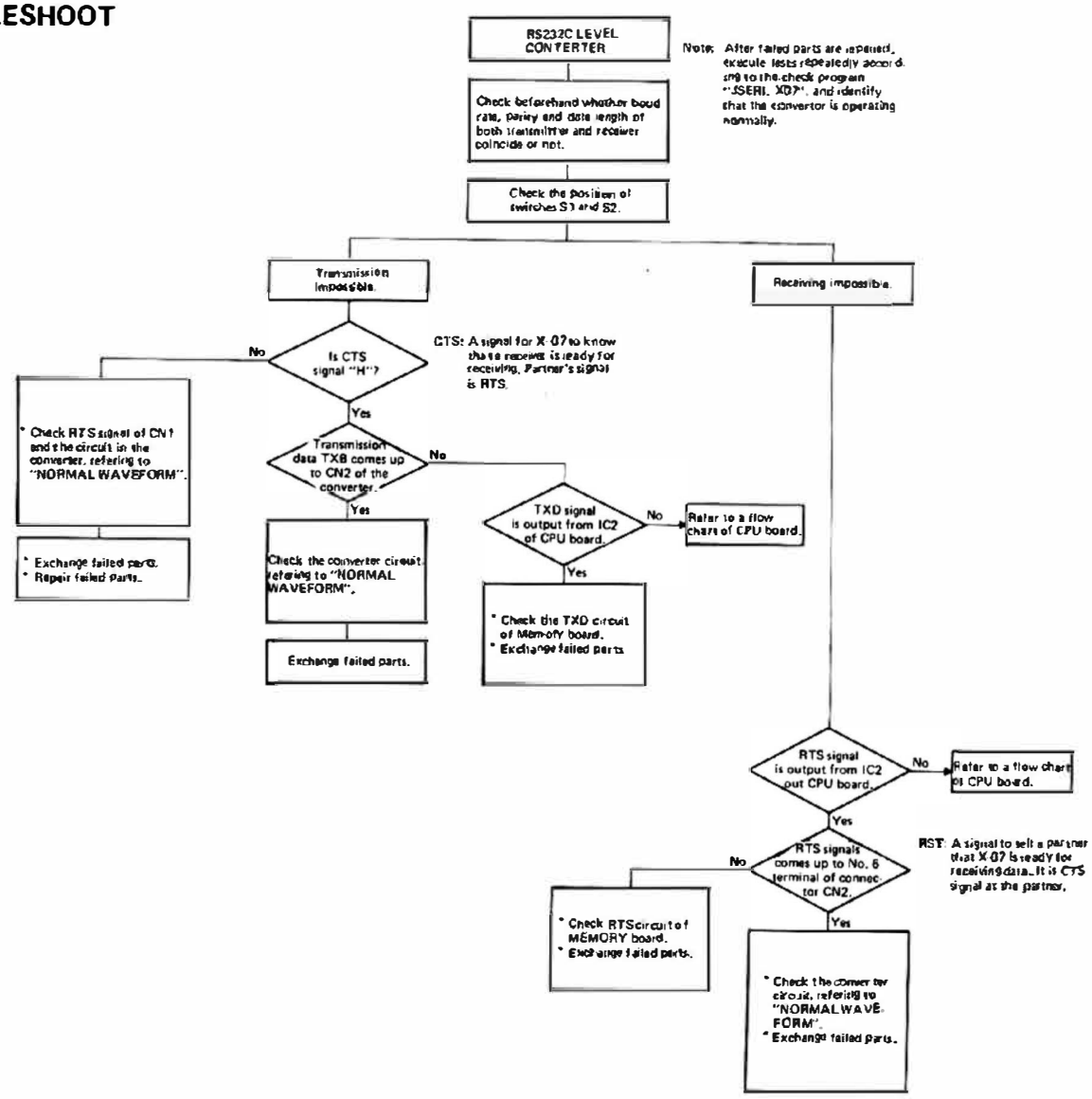

IC & TR TERMINALS

WA2-0113-000
TR 2SC2603

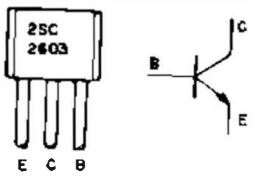

WA2-0282-000
TR 2SA844C

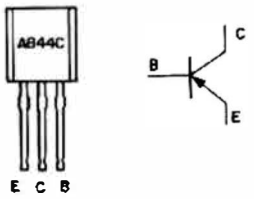

WA2-0374-000
TR 2SD789

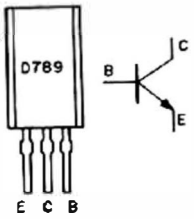

WA3-0311-000
IC TC4029BP COUNTER

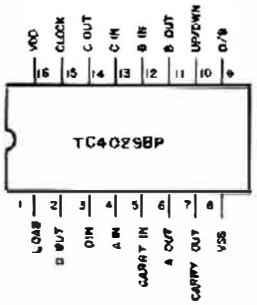

WA3-0561-000
IC TC4069BP INVERTER

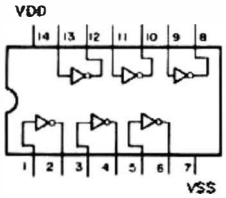

WA3-0633-000
IC HD14011BP NAND

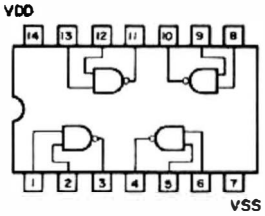

11-4 X-710

X-710/710E

X-710 and X-710E are only different the IC3 (LSI).

X-710 (IC3: DLG13) . . . . . KANA MODE for JAPANESE
X-710E (IC3: DLG1901) . . . . NUM MODE for EXPORT

11-4) Color Graphic Printer X-710

EXPLODED VIEW

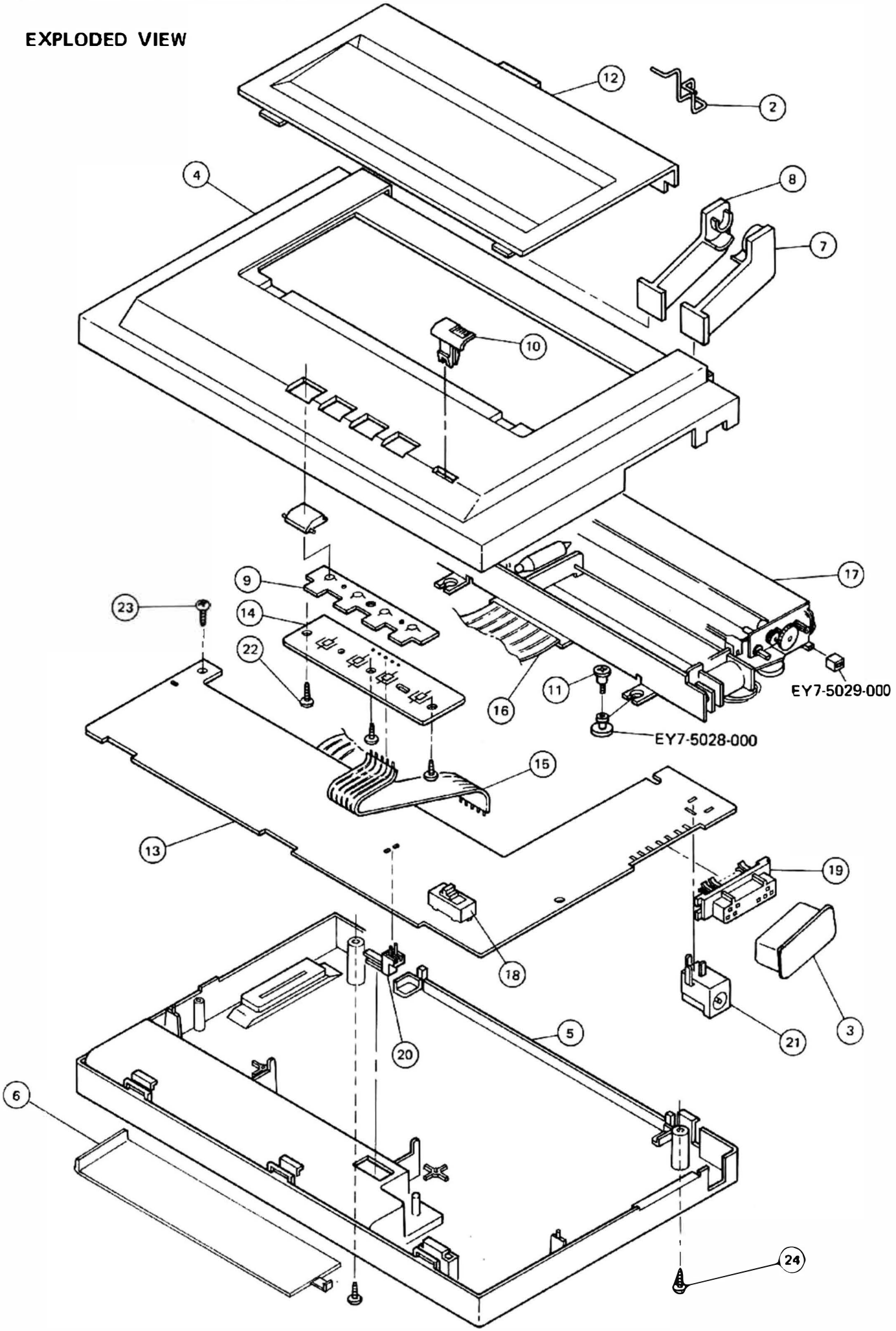

N	KEY NO.	PART NO.	Q'TY	DESCRIPTION	REMARKS	PRICE
	1	EA1-2452-000	1	DAMPER(B),URETHANE FORM		
	2	EA1-4905-000	1	HOOK,PAPER DEFLECTION		
*	3	EA1-5046-000	1	CAP(B), CONNECTOR		
*	4	EA1-5053-000	1	UPPER COVER		
*	5	EA1-5054-000	1	LOWER COVER		
*	6	EA1-5057-000	1	BATTERY COVER		
*	7	EA1-5058-000	1	ARM(A),PAPER HOLDER		
*	8	EA1-5059-000	1	ARM(B),PAPER HOLDER		
*	9	EA1-5060-000	1	RUBBER PLATE,CONDUCTIVE		
*	10	EA1-5061-000	1	KNOB,SWITCH		
*	11	EA1-5095-000	2	TAP TIGHT SCREW, M2x8		
*		EA1-8084-000	1	SETTING CASE		
*	12	EF1-0326-000	1	COVER UNIT,PRINTER		
*	13	EH1-0672-000	1	P.C.B, CONTROL BOARD		
*	14	EH1-0673-000	1	P.C.B, KEYBOARD		
*	15	EH2-0394-000	1	FLAT CABLE,5P		
*	16	EH2-0407-000	1	FLAT CABLE, 13P		
*		ES2-2191-000	4	KEYTOP, LIGHT GRAY		
*	17	ES5-0135-000	1	PRINTER UNIT, DPG2308		
*	18	ES5-0139-000	1	CASE, BALL POINT PEN		
*	19	WS1-0205-000	1	CONNECTOR,15P		
*	20	WS3-0476-000	1	CONNECTOR, 2P		
*	21	WS6-0026-000	1	POWER JACK		
	C 1	VC9-1256-000	1	ELECTROLYTIC CAPACITOR 100uF 10V		
	C 2	VC9-1256-000	1	ELECTROLYTIC CAPACITOR 100uF 10V		
	C 3	VC4-3503-472	1	CERAMIC CAPACITOR 4700PF 50V		
	C 4	VC4-3503-472	1	CERAMIC CAPACITOR 4700PF 50V		
	C 5	VC4-3503-221	1	CERAMIC CAPACITOR 220PF 50V		
	C 6	VC4-3503-221	1	CERAMIC CAPACITOR 220PF 50V		
	C 7	VC4-3503-472	1	CERAMIC CAPACITOR 4700PF 50V		
	C 8					
*	C 9	VC9-1210-000	1	ELECTROLYTIC CAPACITOR 47uF 16V		
	C10	VC9-0582-000	1	CERAMIC CAPACITOR 100,000PF 25V		

N	KEY NO.	PART NO.	Q'TY	DESCRIPTION	REMARKS	PRICE
	C11	VC4-3503-331	1	CERAMIC CAPACITOR 330PF 50V		
	D 1	WA1-0355-000	1	DIODE 11DO-03		
	D 2	WA1-0078-000	1	DIODE ERB12-01		
	D 3	WA1-0078-000	1	DIODE ERB12-01		
	D 4	WA1-0078-000	1	DIODE ERB12-01		
	D 5	WA1-0078-000	1	DIODE ERB12-01		
	D 6	WA1-0365-000	1	DIODE HSM2835		
	D 7	WA1-0356-000	1	DIODE HSM2837		
	D 8					
	D 9	WA1-0078-000	1	DIODE ERB12-01		
	D10	WA1-0078-000	1	DIODE ERB12-01		
	IC1	WA4-0261-000	1	IC, ICL7663CPA		
	IC2	WA3-0634-000	1	CMOS IC HD14013BP		
	IC3	WA3-0942-000	1	LSI HD44860(DLG13)		
	IC4	WA2-0382-000	1	IC(TRANSISTOR ARRAY) LB1247		
	IC5	WA3-0974-000	1	IC TC4011BF		
*	R 1	VR1-8013-270	1	CARBON RESISTOR 27 ohm 1W		
	R 2	VR1-8143-203	1	SOLID RESISTOR 20k 1/4W		
	R 3	VR1-8143-203	1	SOLID RESISTOR 20k 1/4W		
	R 4	VR1-8143-203	1	SOLID RESISTOR 20k 1/4W		
	R 5	VR1-8143-203	1	SOLID RESISTOR 20k 1/4W		
	R 6	VR1-8143-203	1	SOLID RESISTOR 20k 1/4W		
	R 7	VR1-8143-203	1	SOLID RESISTOR 20k 1/4W		
	R 8	VR1-8143-203	1	SOLID RESISTOR 20k 1/4W		
	R 9	VR1-8143-203	1	SOLID RESISTOR 20k 1/4W		
	R10	VR9-2777-000	1	RESISTOR 240k 1/4W		
	R11	VR9-1034-000	1	RESISTOR 680k 1/4W		
	R12	VR9-1460-000	1	CHIP RESISTOR 1M 1/4W		
	R13	VR9-2833-000	1	CHIP RESISTOR 2.2k 1/8W		
	R14	VR9-2834-000	1	CHIP RESISTOR 4.7k 1/8W		
	R15	VR9-2834-000	1	CHIP RESISTOR 4.7k 1/8W		
	R16	VR9-2834-000	1	CHIP RESISTOR 4.7k 1/8W		
	R17	VR9-2835-000	1	RESISTOR 20k 1/8W		

N	KEY NO.	PART NO.	Q'TY	DESCRIPTION		REMARKS	PRICE	
	R18	VR9-1624-000	2	CHIP RESISTOR 10M 1/8W				
	R19	VR1-8143-104	1	SOLID RESISTOR 100k 1/4W				
	R20	VR1-1143-124	1	CARBON RESISTOR 120k 1/4W				
	R21	VR9-2836-000	1	CHIP RESISTOR 51k 1/8W				
	R22	VR9-2779-000	1	RESISTOR 150k 1/4W				
	R23	VR9-2610-000	1	RESISTOR, METALIC 42.2k 1/4W				
	R24	VR9-0963-000	1	CHIP RESISTOR 150k 1/8W				
	R25	VR9-3088-000	1	CHIP RESISTOR 56k 1/8W				
	R26	VR9-1071-000	1	CHIP RESISTOR 220k 1/8W				
	R27	VR9-1071-000	1	CHIP RESISTOR 220k 1/8W				
	R28	VR9-1624-000	1	CHIP RESISTOR 10k 1/8W				
	R29	VR9-2838-000	1	CHIP RESISTOR 6.8k 1/8W				
	R30	VR9-2838-000	1	CHIP RESISTOR 6.8k 1/8W				
	R31	VR9-1058-000	1	CHIP RESISTOR 100k 1/8W				
	R32	VR9-1058-000	1	CHIP RESISTOR 100k 1/8W				
	R33	VR9-2839-000	1	CHIP RESISTOR 220 ohm 1/8W				
	R34	VR9-2839-000	1	CHIP RESISTOR 220 ohm 1/8W				
	R35	VR1-8143-394	1	SOLID RESISTOR 390k 1/4W				
	R36	VR1-8143-821	1	SOLID RESISTOR 820 ohm 1/4W				
	RA1	VR9-0948-000	1	RESISTOR ARRAY 10k x 8 1/8W				
	SW1	WC3-9013-000	1	SLIDE SWITCH,2P				
	TR1	WA2-0282-000	1	TRANSISTOR 2SA844C				
	TR2	WA2-0282-000	1	TRANSISTOR 2SA844C				
	TR3	WA2-0283-000	1	TRANSISTOR 2SD788				
	TR4	WA2-0283-000	1	TRANSISTOR 2SD788				
	TR5	WA2-0282-000	1	TRANSISTOR 2SA844C				
	TR6	WA2-0367-000	1	TRANSISTOR 2SB739C				
	TR7	WA2-0367-000	1	TRANSISTOR 2SB739C				
	TR8	WA2-0282-000	1	TRANSISTOR 2SA844C				
	TR9	WA2-0113-000	1	TRANSISTOR 2SC2603(D,E,F)				
	TR10	WA2-0195-000	1	TRANSISTOR 2SA844D				
	TR11	WA2-0113-000	1	TRANSISTOR 2SC2603(D,E,F)				
	TR12	WA2-0113-000	1	TRANSISTOR 2SC2603(D,E,F)				

N	KEY NO.	PART NO.	Q'TY	DESCRIPTION		REMARKS	PRICE	
	XTAL	WK2-9003-000	1	CERAMIC FILTER 600kHz				
	ZD1	WA1-0351-000	1	ZENER DIODE HZ11A3				
	ZD2	WA1-0412-000	1	ZENER DIODE HZ4LLB				
	ZD3	WA1-0410-000	1	ZENER DIODE HZ3LLA				
		SCREW						
		XA9-0154-000	3	SCREW,TAPPING, 2x4				
		XB3-1260-605	1	SCREW,TAPPING, 2.6x6				
		XB3-1261-007	3	SCREW,TAPPING, 2.6x10				

N	KEY NO.	PART NO.	Q'TY	DESCRIPTION		REMARKS	PRICE	
		For Modified Power Supply Circuit(Without IC1)						
	R10	VR9-3284-000	1	METAL FILM RESISTOR 100K 1/4W				
	R11	VR9-1032-000	1	METAL FILM RESISTOR 33K 1/4W				
	R37	VR1-1141-823	1	CARBON RESISTOR 82K 1/4W	+/- 5%			
	R38	VR1-1141-204	1	CARBON RESISTOR 200K 1/4W	+/- 5%			
	R39	VR1-1141-104	1	CARBON RESISTOR 100K 1/4W	+/- 5%			
	TR10	WA2-0195-000	1	TRANSISTOR 2SA844D				
	TR11	WA2-0113-000	1	TRANSISTOR 2SC2603(D,E,F)				
	TR12	WA2-0113-000	1	TRANSISTOR 2SC2603(D,E,F)				
	ZD2	WA1-0412-000	1	ZENER DIODE HZ4LLB				
	ZD3	WA1-0410-000	1	ZENER DIODE HZ3LLA				

N	KEY NO.	PART NO.	Q'TY	DESCRIPTION		REMARKS	PRICE	
	1	EA1-2452-000	1	DAMPER(B), URETHANE FORM				
	2	EA1-4905-000	1	HOOK, PAPER DEFLECTION				
*	3	EA1-5046-000	1	CAP(B), CONNECTOR				
*	4	EA1-5053-000	1	UPPER COVER				
*	5	EA1-5054-000	1	LOWER COVER				
*	6	EA1-5057-000	1	BATTERY COVER				
*	7	EA1-5058-000	1	ARM(A), PAPER HOLDER				
*	8	EA1-5059-000	1	ARM(B), PAPER HOLDER				
*	9	EA1-5060-000	1	RUBBER PLATE, CONDUCTIVE				
*	10	EA1-5061-000	1	KNOB, SWITCH				
*	11	EA1-5095-000	2	TAPTIGHT SCREW, M2x8				
*		EA1-8084-000	1	SETTING CASE				
*	12	EP1-0326-000	1	COVER UNIT, PRINTER				
*	13	EH1-0672-000	1	P.C.B., CONTROL BOARD				
*	14	EH1-0673-000	1	P.C.B., KEYBOARD				
*	15	EH2-0394-000	1	FLAT CABLE, 5P				
*	16	EH2-0407-000	1	FLAT CABLE, 13P				
*		ES2-2191-000	4	KEYTOP, LIGHT GRAY				
*	17	ES5-0135-000	1	PRINTER UNIT, DPG2308				
*	18	ES5-0139-000	1	SHAFT, ROLL PAPER				
*	19	WS1-0205-000	1	CONNECTOR, 15P				
*	20	WS3-0476-000	1	CONNECTOR, 2P, BATTERY				
*	21	WS6-0026-000	1	POWER JACK, AD-5				
*	C 1	VC9-1256-000	1	ELECTROLYTIC CAPACITOR 100uF	10V			
*	C 2	VC9-1256-000	1	ELECTROLYTIC CAPACITOR 100uF	10V			
	C 3	VC4-3503-472	1	CERAMIC CAPACITOR 4700pF	50V			
	C 4	VC4-3503-472	1	CERAMIC CAPACITOR 4700pF	50V			
	C 5	VC4-3503-221	1	CERAMIC CAPACITOR 220pF	50V			
	C 6	VC4-3503-221	1	CERAMIC CAPACITOR 220pF	50V			
	C 7	VC4-3503-472	1	CERAMIC CAPACITOR 4700pF	50V			
	C 8	----						

N	KEY NO.	PART NO.	Q'TY	DESCRIPTION		REMARKS	PRICE	
	C 9	----						
	C10	VC9-0582-000	1	CERAMIC CAPACITOR 100,000pF	25V			
	C11	VC4-3503-331	1	CERAMIC CAPACITOR 330pF	50V			
	D 1	WA1-0355-000	1	DIODE, 11DO-03				
	D 2	WA1-0078-000	1	DIODE, ERB12-01				
	D 3	WA1-0078-000	1	DIODE, ERB12-01				
	D 4	WA1-0078-000	1	DIODE, ERB12-01				
	D 5	WA1-0078-000	1	DIODE, ERB12-01				
*	D 6	WA1-0365-000	1	DIODE, HSM2835(BLACK)				
*	D 7	WA1-0356-000	1	DIODE, HSM2837(GREEN)				
	D 8	X65-5032-000	1	DIODE, 1S1588				
	D 9	WA1-0078-000	1	DIODE, ERB12-01				
	D10	WA1-0078-000	1	DIODE, ERB12-01				
	IC1	----	1					
	IC2	WA3-0634-000	1	CMOS IC HD14013BP				
*	IC3	WA3-1151-000	1	CMOS LSI DLG190IE, CONTROLLER				
*	IC4	WA2-0382-000	1	IC LB1247, TRANSISTOR ARRAY				
*	IC5	WA3-0974-000	1	CMOS IC TC4011BF				
*	R 1	VR1-8013-270	1	CARBON RESISTOR 27ohm	1 W			
	R 2	VR1-8143-203	1	SOLID RESISTOR 20k	1/4W			
	R 3	VR1-8143-203	1	SOLID RESISTOR 20k	1/4W			
	R 4	VR1-8143-203	1	SOLID RESISTOR 20k	1/4W			
	R 5	VR1-8143-203	1	SOLID RESISTOR 20k	1/4W			
	R 6	VR1-8143-203	1	SOLID RESISTOR 20k	1/4W			
	R 7	VR1-8143-203	1	SOLID RESISTOR 20k	1/4W			
	R 8	VR1-8143-203	1	SOLID RESISTOR 20k	1/4W			
	R 9	VR1-8143-203	1	SOLID RESISTOR 20k	1/4W			
*	R10	VR9-3284-000	1	RESISTOR, METALIC 100k	1/4W			
	R11	VR9-1201-000	1	RESISTOR, METALIC 33k	1/4W			
*	R12	VR9-3100-000	1	RESISTOR, CHIP TYPE 1M	1/8W			
*	R13	VR9-3077-000	1	RESISTOR, CHIP TYPE 2.2k	1/8W			

N	KEY NO.	PART NO.	Q'TY	DESCRIPTION		REMARKS	PRICE	
*	R14	VR9-3079-000	1	RESISTOR, CHIP TYPE 4.7k 1/8W				
*	R15	VR9-3079-000	1	RESISTOR, CHIP TYPE 4.7k 1/8W				
*	R16	VR9-3079-000	1	RESISTOR, CHIP TYPE 4.7k 1/8W				
*	R17	VR9-3083-000	1	RESISTOR, CHIP TYPE 20k 1/8W				
*	R18	VR9-3081-000	1	RESISTOR, CHIP TYPE 10k 1/8W				
*	R19	VR1-1143-104	1	CARBON RESISTOR 100k 1/4W				
*	R20	VR1-1143-124	1	CARBON RESISTOR 120k 1/4W				
*	R21	VR9-3087-000	1	RESISTOR, CHIP TYPE 51k 1/8W				
*	R22	VR9-3284-000	1	RESISTOR, METALIC 100k 1/4W	+/- 1%			
*	R23	VR9-2778-000	1	RESISTOR, METALIC 47k 1/4W	+/- 1%			
	R24	----						
	R25	VR9-2141-000	1	RESISTOR, CHIP TYPE 100k 1/8W				
*	R26	VR9-3093-000	1	RESISTOR, CHIP TYPE 220k 1/8W				
*	R27	VR9-3093-000	1	RESISTOR, CHIP TYPE 220k 1/8W				
*	R28	VR9-3081-000	1	RESISTOR, CHIP TYPE 10k 1/8W				
*	R29	VR9-3080-000	1	RESISTOR, CHIP TYPE 6.8k 1/8W				
*	R30	VR9-3080-000	1	RESISTOR, CHIP TYPE 6.8k 1/8W				
	R31	VR9-2141-000	1	RESISTOR, CHIP TYPE 100k 1/8W				
	R32	VR9-2141-000	1	RESISTOR, CHIP TYPE 100k 1/8W				
*	R33	VR9-3075-000	1	RESISTOR, CHIP TYPE 220ohm1/8W				
*	R34	VR9-3075-000	1	RESISTOR, CHIP TYPE 220ohm1/8W				
	R35	----						
	R36	----						
	R37	VR1-8143-823	1	SOLID RESISTOR 82k 1/4W				
*	R38	VR1-1143-204	1	CARBON RESISTOR 200k 1/4W				
*	R39	VR1-1143-104	1	CARBON RESISTOR 100k 1/4W				
*	R40	VR1-1143-204	1	CARBON RESISTOR 200k 1/4W				
	RA1	VR9-0948-000	1	RESISTOR ARRAY 10k x 8 1/8W				

N	KEY NO.	PART NO.	Q'TY	DESCRIPTION		REMARKS	PRICE	
	SW1	WC3-9013-000	1	SLIDE SWITCH, 2P, POWER				
	TR1	WA2-0282-000	1	TRANSISTOR 2SA844(C,D)				
	TR2	WA2-0282-000	1	TRANSISTOR 2SA844(C,D)				
*	TR3	WA2-0283-000	1	TRANSISTOR 2SD788				
*	TR4	WA2-0283-000	1	TRANSISTOR 2SD788				
	TR5	WA2-0282-000	1	TRANSISTOR 2SA844(C,D)				
*	TR6	WA2-0367-000	1	TRANSISTOR 2SB739				
*	TR7	WA2-0367-000	1	TRANSISTOR 2SB739				
	TR8	WA2-0282-000	1	TRANSISTOR 2SA844(C,D)				
	TR9	WA2-0113-000	1	TRANSISTOR 2SC2603(D,E,F)				
	TR10	WA2-0195-000	1	TRANSISTOR 2SA844(D)				
	TR11	WA2-0113-000	1	TRANSISTOR 2SC2603(D,E,F)				
	TR12	WA2-0113-000	1	TRANSISTOR 2SC2603(D,E,F)				
*	XTAL	WK2-9003-000	1	CERAMIC FILTER 600kHz				
*	ZD1	WA1-0351-000	1	ZENER DIODE HZ11A3				
*	ZD2	WA1-0412-000	1	ZENER DIODE HZ4LLB				
*	ZD3	WA1-0410-000	1	ZENER DIODE HZ3LLA				
		SCREWS						
*		EA1-5095-000	2	TAPTIGHT SCREW M2 x 8, PRINTER				
		XA9-0154-000	3	SCREW, TAPPING M2 x 4, P.C.B.,	KEYBOARD			
		XB3-1260-605	1	SCREW, TAPPING 2.6x 6, P.C.B.,	CONTROLL BOARD			
		XB3-1261-007	3	SCREW, TAPPING 2.6x10, COVER				

CIRCUIT DIAGRAM

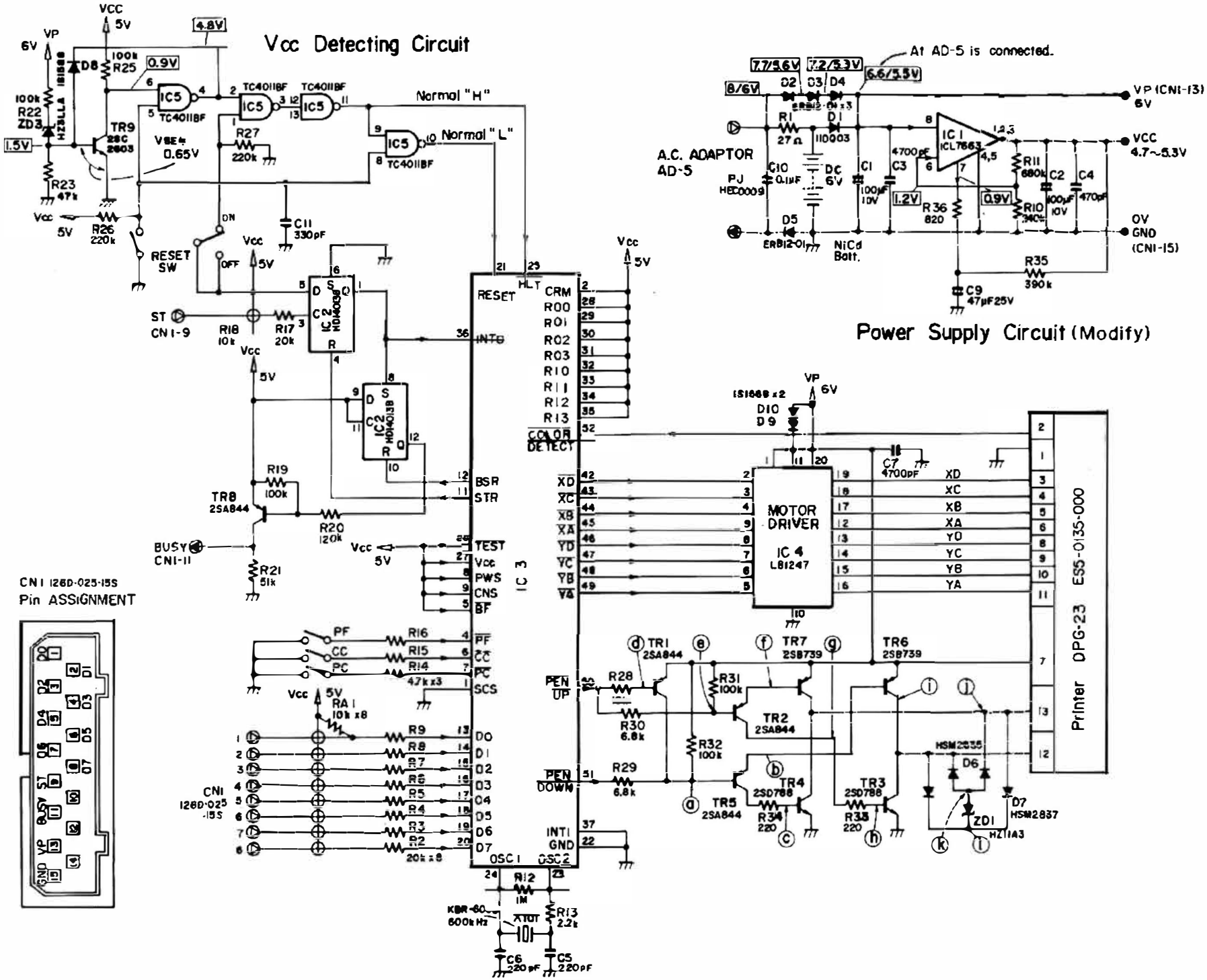
Vcc Detecting Circuit
Power Supply Circuit (Modify)
A.C. ADAPTOR AD-5
At AD-5 is connected.
MOTOR DRIVER IC 4 LB1247
Printer DPG-23 ES5-0135-000
CN1 12BD-025-15S Pin ASSIGNMENT
Normal "H"
Normal "L"
RESET SW
NiCd Batt.

ORIGINAL
POWER SUPPLY CIRCUIT (IC 1 is used)

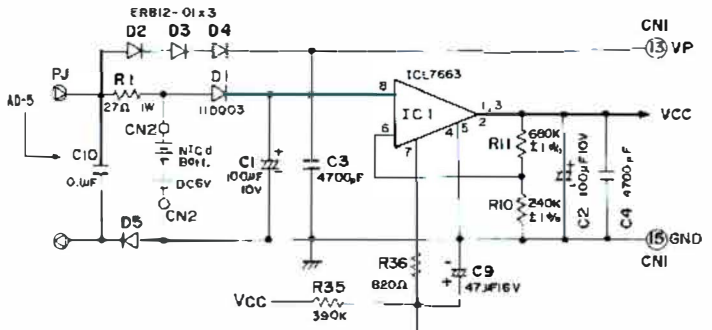

ORIGINAL
VP DETECTIVE CIRCUIT

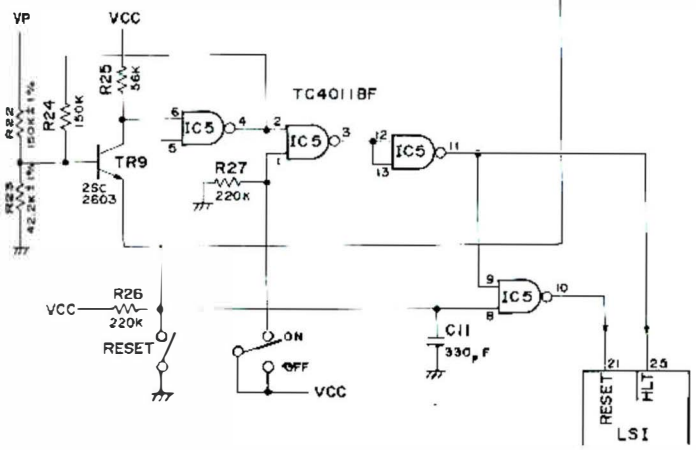

MODIFIED
POWER SUPPLY CIRCUIT (IC 1 is removed)

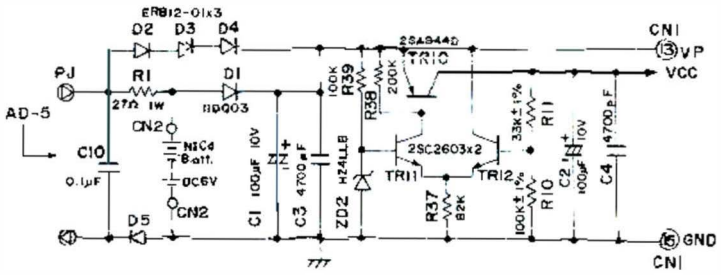

MODIFIED
VP DETECTIVE CIRCUIT (For modified power supply circuit)

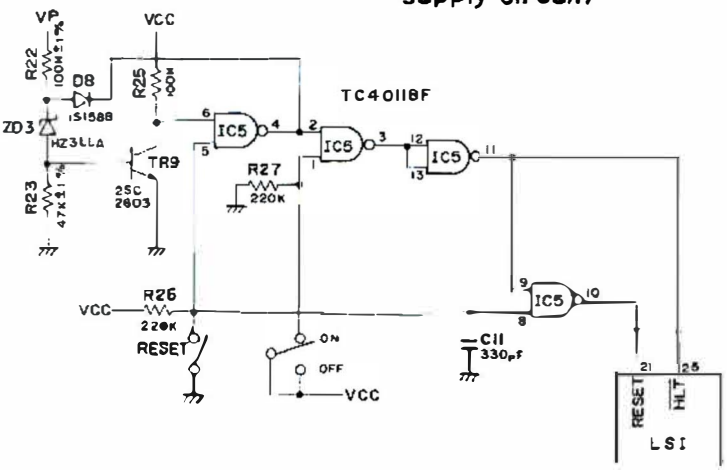

CARD LAYOUT

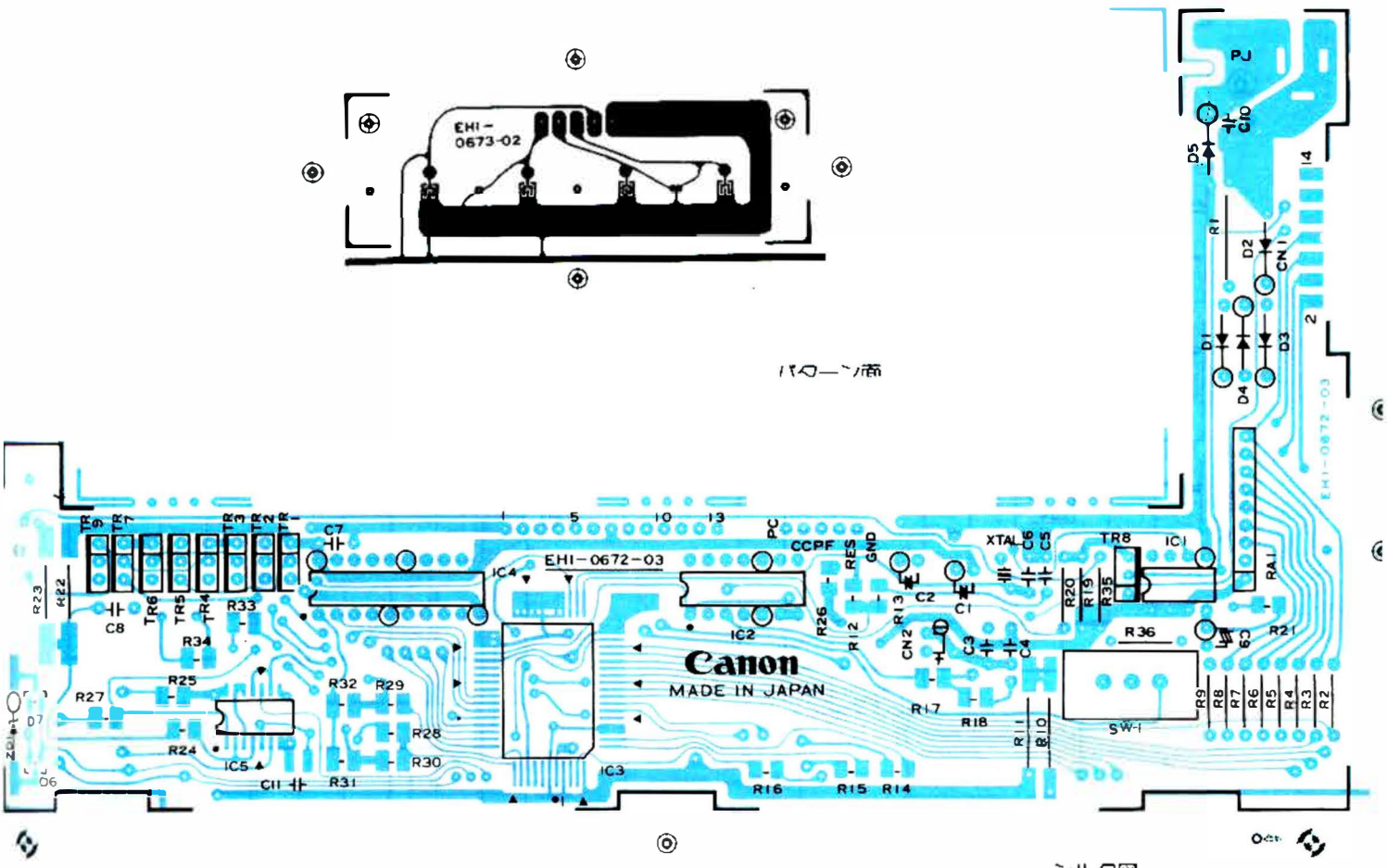

NORMAL WAVEFORM

Clock Pulse

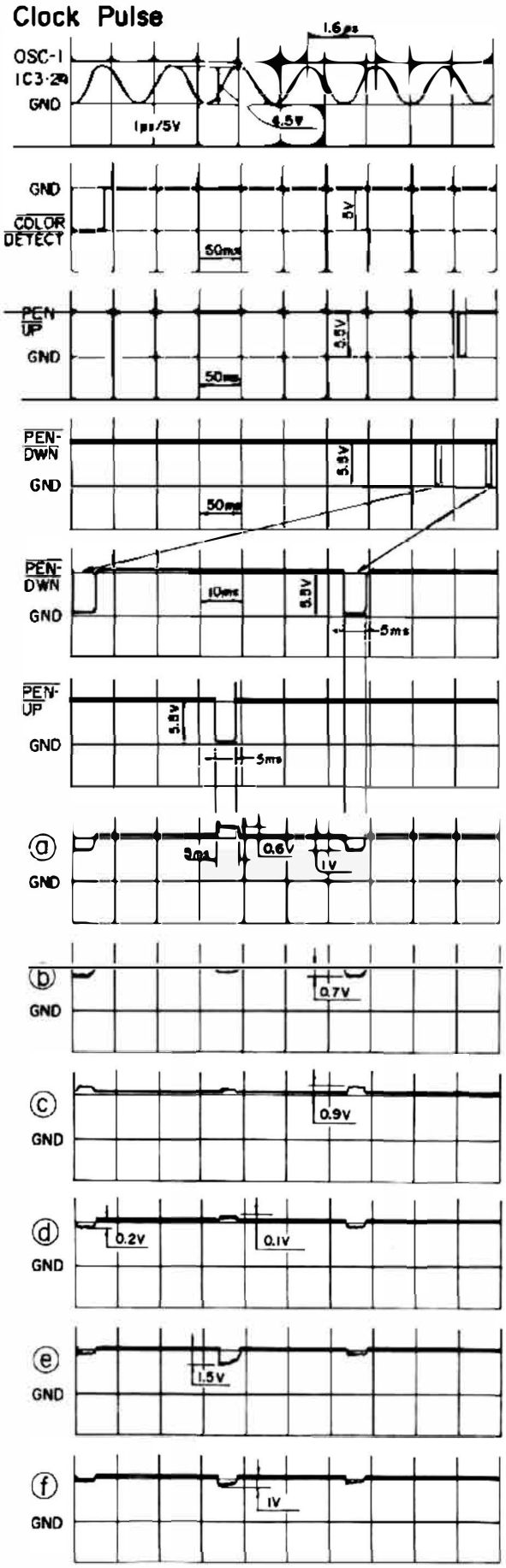

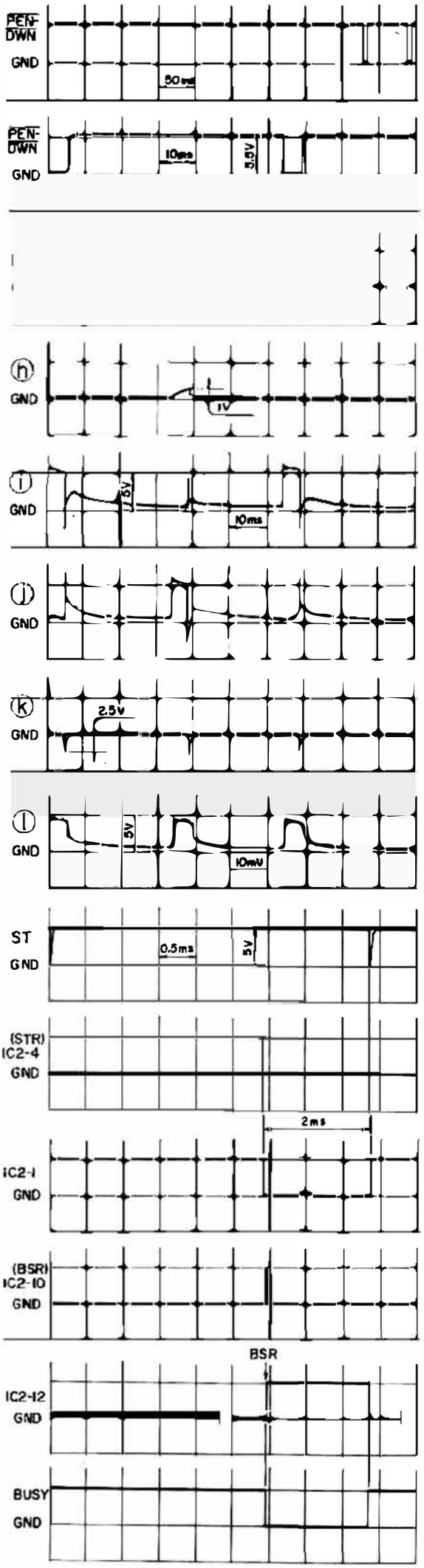

X-MOTOR

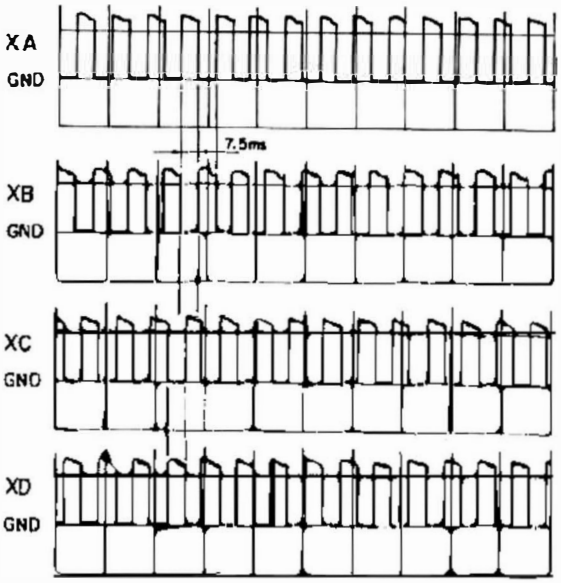

Y-MOTOR (Depress PF key)

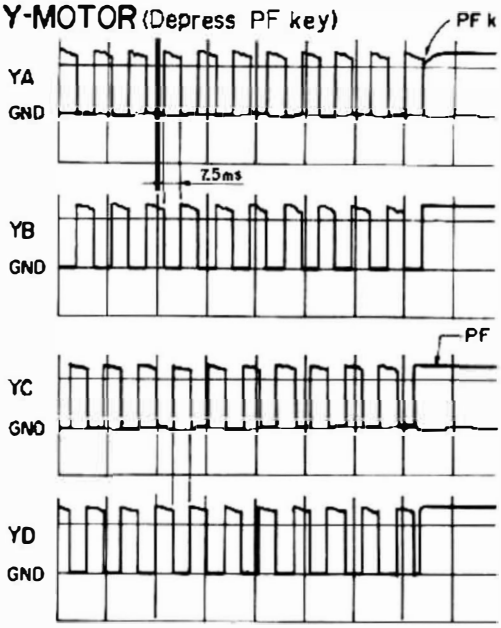

TROUBLESHOOTING

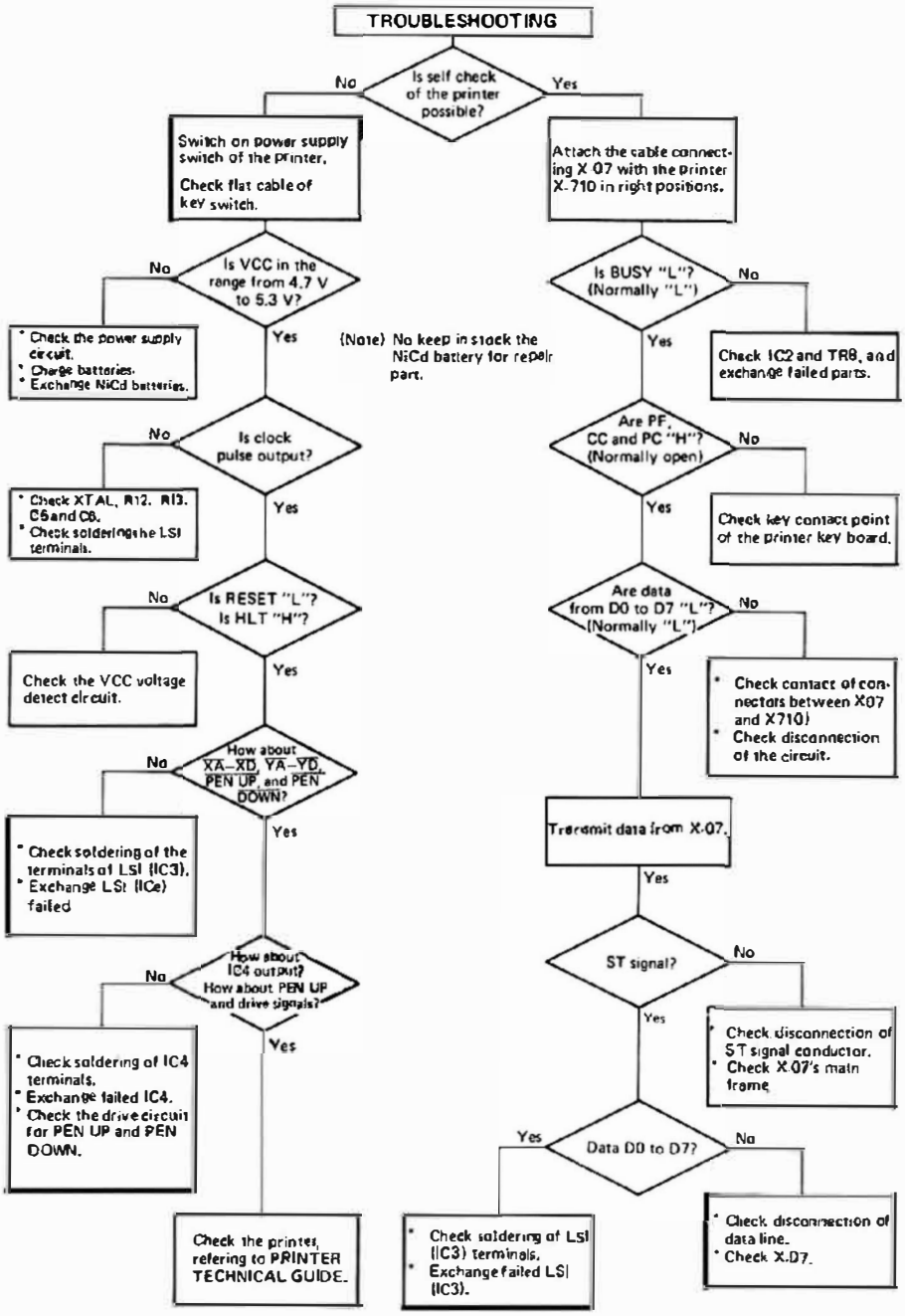

12. CABLE FOR OPTION

XC-910 CASSETTE I/F CABLE

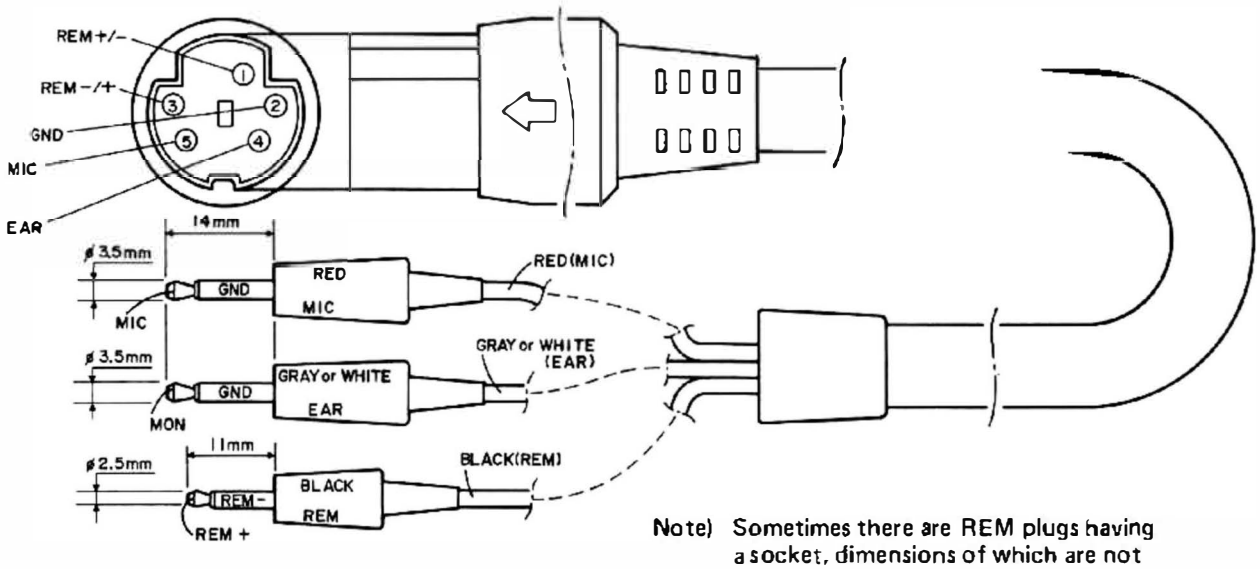

Note) Sometimes there are REM plugs having a socket, dimensions of which are not suitable for tape recorders manufactured by several makers.

XC-920 PRINTER X-710 I/F CABLE

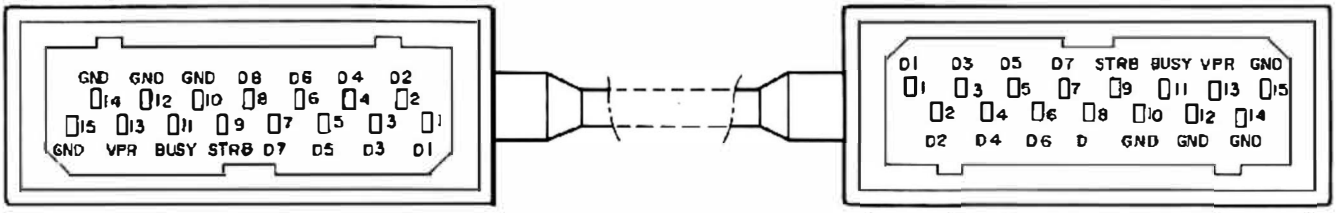

XC-930 PARALLEL PORT I/F CABLE (CENTRONICS)

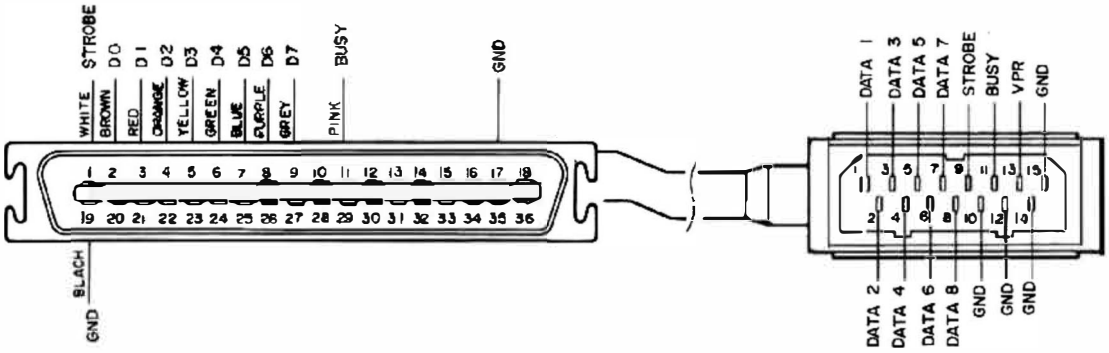

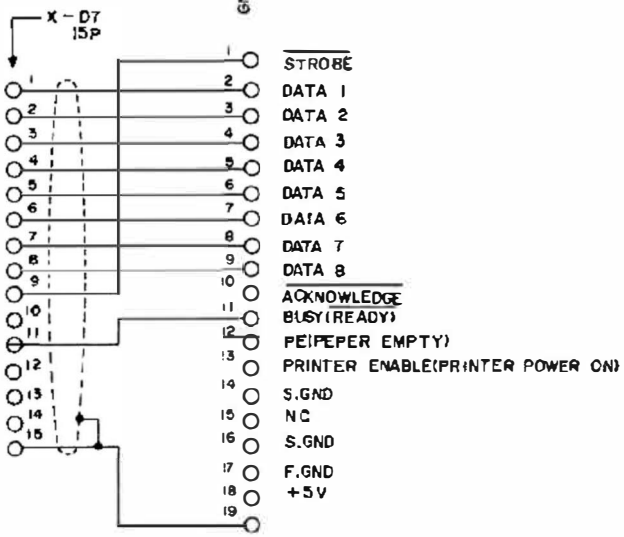

19, 20, 28 — GND, when the signal conductor is of a twisted pair.

29, 30 — N.C.

31 — INIT (Printer initialized)

32 — ERROR (Printer unusual)

33 — S. GND

34, 35 — N.C.

36 — SLCT INSELECT (Data entry to the printer is possible, when it is low.)

XC-940 SERIAL PORT I/F CABLE

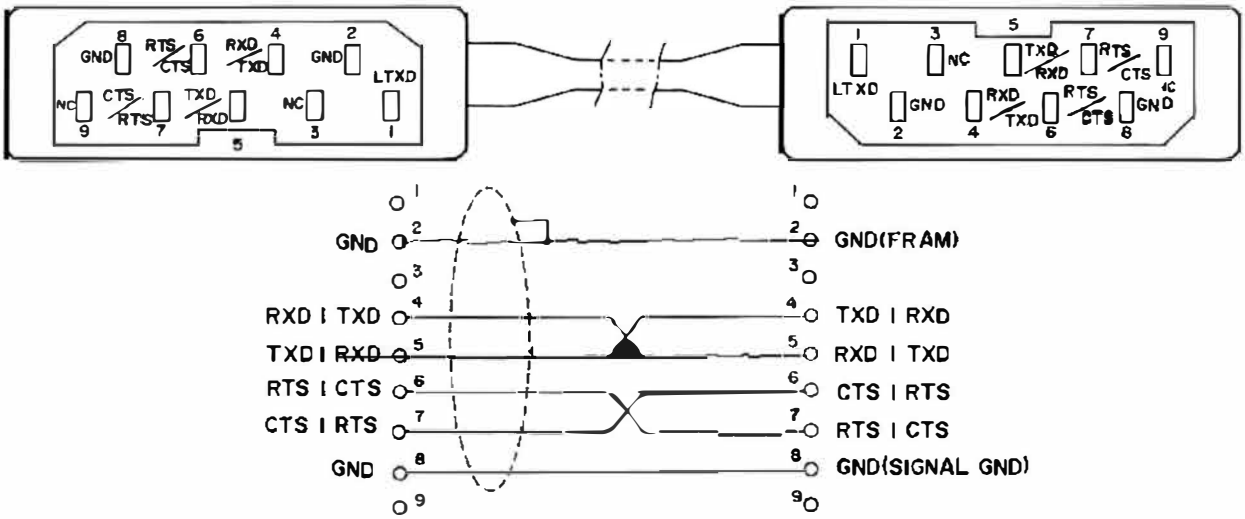

13. TEST PROGRAM

X-07 TEST PROGRAM SPECIFICATIONS

CONTENTS

Page

1. Introduction 87
2. X-07 Program Operations 88
   - 2-1) JMEM. X07 88
   - 2-2) JOPRAM. X07 89
   - 2-3) JUSER. X07 90
   - 2-4) JDUMP1. X07 91
   - 2-5) JSERI. X07 91
   - 2-6) JPRINT. X07 94
   - 2-7) JKEY. X07 95
   - 2-8) JCAS. X07 95
   - 2-9) JSBRAM. X07 96
   - 2-10) JCUNIT. X07 96
   - 2-11) JRAM. X07 98
   - 2-12) CARD1. MID 100
   - 2-13) JRAM2. X07 104
   - 2-14) CARD2. MID 105
   - 2-15) JCARDS. X07 107
   - 2-16) JCARDR. X07 107
3. AS-100 Program Operations 108
   - 3-1) JTRANSA. BAS 108
   - 3-2) JCARDR. BAS 109
   - 3-3) JCARDS. BAS 110
   - 3-4) JFDUMP. BAS 111
   - 3-5) X07. BAS 112
   - 3-6) TTY3D. SUB 112
   - 3-7) TTY3DN. SUB 112
4. Others 113
   - 4-1) RS232C Cables and Connectors 113
   - 4-2) ASCII File Transfer 114
   - 4-3) Intermediate (Machine) Code File Transfer 115
   - 4-4) CARD1. MID, CARD2. MID Preparations and Procedures 116
5. Simplified Checks 119
   - 5-1) Simplified RAM Check 119
   - 5-2) Simplified ROM Check 119
   - 5-3) Simplified Parallel Port Check 119
   - 5-4) Simplified Serial Port Check 120
   - 5-5) Simplified Cassette Check 120

1. INTRODUCTION

The X-07 test program is stored in the X-07 TEST in an AS-100 floppy disk (8-inch diameter) and is supplied to the user.

The user transfers the X-07 test program to the X-07 by using one of the AS-100 RS232C ports (COM2). (See Section 4 for details.)

Then, the transferred X-07 test program is stored in the pertinent RAM card. The program stored in the RAM card is used to test an X-07 to be checked.

(1) X07 test programs

1.	JMEM. X07	RAM card and 8k byte optional RAM read/write check
2.	JOPRAM. X07	RAM card and 8k byte optional RAM galloping check
3.	JUSER. X07	RAM card and 8k byte optional RAM read/write check
4.	JDUMP1. X07	Memory dump
5.	JSER1. X07	COM and OPT check
6.	JPRINT. X07	GPR check
7.	JKEY. X07	Keyboard check
8.	JCAS. X07	Cassette check
9.	JSBRAM. X07	Sub-CPU RAM check
10.	JCUNIT. X07	Sub-CPU check
11.	JRAM. X07	X-07 RAM, and ROM check support program
12.	CARD1. MID	X-07 RAM and ROM check program
13.	JRAM2. X07	RAM and ROM check support program for other than X-07
14.	CARD2. MID	RAM and ROM check program for other than X-07

(2) X-07 ⇄ AS-100, X-07 ⇄ X-07 RAM card transfer program (X-07 side)

1.	JCARDS. X07	RAM card data transmission
2.	JCARDR. X07	RAM card data reception

(3) AS-100 program utility

1.	JTRANSA. BAS	ASCII data transmission and reception
2.	JCARDR. BAS	RAM card data reception
3.	JCARDS. BAS	RAM card data transmission
4.	JFDUMP. BAS	File dump
5.	X07. BAS	X-07 command output program
6.	TTY3D. SUB	Intermediate code data reception RSINIT and intermediate code data transmission RSINIT
7.	TTY3DN. SUB	ASCII data reception RSINIT and ASCII data transmission RSINIT

2. X-07 TEST PROGRAM OPERATIONS

2.1 JMEM. X07

Purpose: Checks read/write operations or only the read operation in the RAM card and optional RAM spaces.

Requirements: The X-07 must be normal.
The test area must be reserved with an FSET command before JMEM. X07 execution.

(Output message/operation)	(Explanation)
* JMEM V1.00	Start message
RW--> 0 R--> 1	Read/write or read check specification 0 : Read check after write operation 1 : Read and compare check
START (HEX) =	Test start address (hexadecimal) (Note 1)
STOP (HEX) =	Test end address
INIT (HEX) =	Data at the test start address (Note 2)
ADD (HEX) =	Data at the address (test start address + 1)
LOOP (DEC) =	Test count (decimal)
ST = xxxx SP = xxxx	Confimation message
IV = xx AV = xx	ST for start and SP for stop
LP= xx	IV for INIT, AV for add, and LP for loop
* OK (Y/N)	
* DISP (Y/N)	Displayed and monitored on the screen? (Note 3)
*** CHECK OK !!	Normal end
* ERROR !!	Error message
* ADR = xxxx	ADR: Error address
* RD = xx TST = xx	RD for read data and TST for calculation value

Notes: 1. HEX: Hexadecimal data

2. The data string is as follows (for ST =2000, SP = 27FF, IV = 00, and A V = 01):

MEMORY			
	2000H → 00H (IV)	2000H → 01H (IV+AV)	2000H → 02H (IV+AV+AV)
	2001H → 01H (IV+AV)	2001H → 02H (IV+AV+AV)	2001H → 03H(IV+AV+AV+AV)
	⋮	⋮	⋮
	27FEM → FEH	27FEM → FFH	27FEH → 00H
	27FFH → FFH	27FFH → 00H	27FFH → 01H
	(LOOP = 1)	(LOOP = 2)	(LOOP = 3)

3. Monitored data to be displayed:

```
* WRITE LP = x
* xxxx   TST = xx
  ↑Address  ↑Write data

* READ LP = x
* xxxx   RD = xx   TST = xx
  ↑Address  ↑Read data  ↑Calculation data (correct data)
```

Other

Processing time (time period required for one loop operation)

Area size	With display		Without display	
	R	RW	R	RW
2k bytes	1.3 m	2.3 m	13 m	23.5 m
4k bytes	1.3 m x 2	Same as in the left column.	Same as in the left column.	Same as in the left column.
8k bytes	2.3 m x 4	Same as in the left column.	Same as in the left column.	Same as in the left column.

2.2 JOPRAM. X07

Purpose: Performs RAM card and optional RAM galloping checks.
(The RAM card is checked in 2k byte units, whereas the optional RAM is checked in 8k byte units.)

Requirements: The X-07 must be normal.
To stop the check being executed, press the RESET switch.

(Output message/operation)	(Explanation)
* GAL-OPTION, CARD V1.00	Start message
2000–2FFF (CARD) 2000–3FFF (OPTION) 4000–4FFF (CARD) 1. OPTION 2. CARD (1/2)	Checks whether the RAM is mounted, then outputs this message for the mounted address space. Select one of the RAM cards and optional RAMs, if both are mounted.
START?	Press the RETURN key to start the test.
* END	Test end message
2000–2FFF (CARD) 2000–3FFF (OPTION) 4000–4FFF (CARD)	Displays the tested area's contents
OK!	Normal end
ERROR! ADR = xxxx	Error message

Processing time

	Processing time
RAM card (4k bytes)	3 hours (approx.)
Optional RAM	23.5 hours (approx.)

2.3 JUSER. X07

Purpose: Tests the RAM card and optional RAM. (User-oriented simplified memory test program)

Requirements: Start address = H'2000', End address = H'2FFF', Data pattern = H'55', 'AA'

These items are fixed. The user may modify these items if necessary.

The test area must be reserved with an FSET command.

Modifications:

1. Address modification

   1 Optional RAM (8k byte) test

   Line No. 20, Line No. 50 } &H2FFF → &H3FFF

   2 RAM card test when the optional RAM is mounted:

   Line No. 20, Line No. 50 } &H2000 → &H4000, &H2FFF → &H4FFF

2. Data modification

   Example: H'55' → H'00', H'AA' → H'FF'

   Line No. 10 &H55 → &H00

   Line No. 80 &HAA → &HFF

   Line No. 90 &HAA → &HFF

Output message/operation	Explanation
DATA = 5	
* OK	55 pattern check OK
DATA = AA	
* OK	AA pattern check OK
* END	End message
ERR xxxx xx	Error message

xx: Error data (AA or 55)

xxxx: Error address

Processing time

	Processing time
RAM card (4k bytes)	2.6 m
Optional RAM (8k bytes)	5.2 m

Note: To check error data, key in PRINT HEX$ (PEEK (I)) immediately after the error message is output.

2.4 JDUMP1. X07

Purpose: Outputs the dump list of an arbitrary address space to the GPR.

Requirements: The X-07 must be normal.

Output message/operation	Explanation
*** DUMP LIST ***	Start message
START (hex) =	DUMP start address input (hexadecimal)
STOP (hex) =	DUMP end address input (hexadecimal)
* xxxx	First address of dumped 16-byte area

GPR output message example: START = 2000, STOP = 2015

```
*** DUMP LIST ***
@ START 2000 --> 2015 STOP

*2000 00  01  16  24  25  4A  41  43      20  20  50  02  0F  00  00  00
*2010 00  00  00  5E  06  0A  0D  BE      4A  43  41  53  00  79  05  14
```

Note: The GPR output is performed according to the [1, 1] specification for reduced character and blue attributes.

2.5 JSERI. X07

Purpose: RS232C, level converter, and optocoupler transmission and reception check and RS232C and level converter loop check

Requirements: The BASIC must operate normally.

Output message/operation	Explanation
* SERIAL V1.00	Start message
COM -> OPT -> 1	Select COM or OPT.
BAUD RATE =	For COM selection: 100 ~ 8000 (increment: 100) For OPT selection: 100 ~ 2400 (increment: 100)
MODE (A -> H)	

MODE	EP	PEN	CBL
A	0	0	0
B	0	0	1
C	0	1	0
D	0	1	1
E	1	0	0
F	1	0	1
G	1	1	0
H	1	1	1

EP: Even parity
1: Even
2: ODD

PEN: Parity enable
1: Enable
0: Disenable

CBL: Character Bit length
1: 8 bits
0: 7 bits

SEND, RECV, SELF -> (0/1/2)	Select transmission, reception, or SELF for COM.
DATA INIT (HEX) = ADD (HEX) =	Note 1

COM/OPT = AAA BAUD = BBB MODE = CCC DDD IV = EE AV = FF OK (Y/N)	Confirmation message AAA : COM or OPT BBB : BAUD RATE DDD : SELF, RECEIVE, SEND EE : INIT value FF : ADD value
DISP (Y/N)?	Monitor output assignment (This message is not output for the OPT test. Y is assumed to be specified for transmission and N is assumed to be specified for reception.)

Messages for SELF/SEND/RECEIVE specifications are as follows.

(1) SELF specification

* SELF	For positions indicated by an asterisk, an asterisk is displayed for transmission; SPACE is displayed for reception.
HIT RETURN	The check starts when the RETURN key is pressed.
* SEND = xx * RECV = xx	Output for DISP = Y.

(2) SEND specification

* SEND	The asterisk blinks for each transmission.
HIT RETURN 2'ND	Press the RETURN key for the reception side first.
* SEND = xx	Output for DISP = Y. This is the case for the OPT specification.

(3) RECEIVE specification

* RECEIVE	The asterisk blinks for each reception.
HIT RETURN 1'st	Press the RETURN key first.
* RECEIV = xx TST = YY	XX: Reception data, YY: Expected value
	Output for DISP = Y. This is not the case for the OPT specification.

Error message

ERROR !! BAUD = xxx MODE = xx RECV = xx TST = xx	An I/O error message may be output on the BASIC side.

Others

Arrange pins as follows to perform the loop test with the SELF specification:

- When looping back with the main frame RS-232C connector

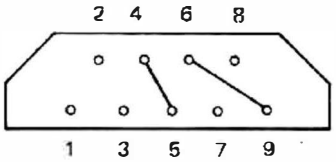

PIN 4 (TXD) —— 5 (RXD)

PIN 6 (CTS) —— 9 (VCC)

○ When signals are returned at the level converter:

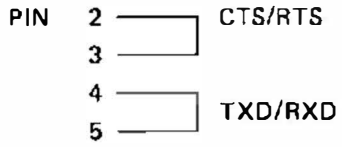

Note: Assume that the first position of the send/receive data is IV and the nth data is An, then

$An = IV + (n - 1) \times AV$

However, the value of An cannot be confined in the 0 to 255 range, the upper limit is specified as 127 (H'7F') for 7-bit data transfer operations and 255 (H'FF') for 8-bit data transfer operations. If the value exceeds the limit, it is set at −128 and −256 respectively.

2.6 JPRINT. X07

Purpose: GPR print character quality and function test

Requirements: The BASIC must operate normally.

Output message	Explanation
* PRINT CHECK V1.00	Start message

Printout example

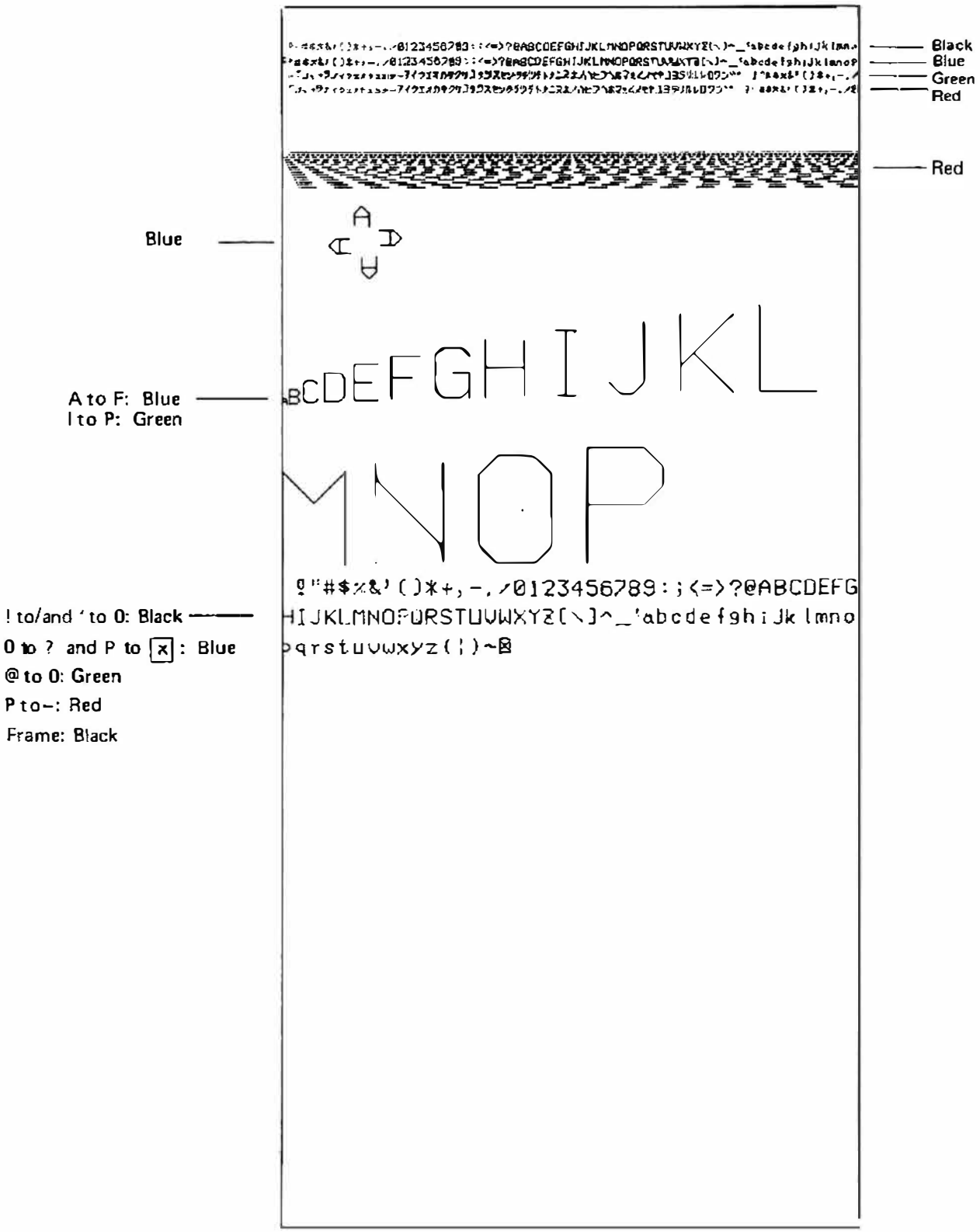

2.7 JKEY. X07

Purpose: Checks interfaces between the sub-CPU and main CPU by inputting data from the keyboard. (The OFF, CTRL-C, and BREAK keys cannot be used.)

Requirements: The BASIC must operate normally.

Output message/operation	Explanation
*** KEY V1.00	Start message
* INPUT KEY	Press any key. (The OFF, CTRL-C, and BREAK keys cannot be used.)
KEY = x	Input key echo back
CODE = xx	Input key code (ASCII code)

2.8 JCAS. X-07

Purpose: Cassette test program.
Test is performed by CSAVE and CLOAD verify operations for a cassette recorder.

Requirements: The BASIC must operate normally.

Output message/operation	Explanation
* CASSETTE V1.00	Start message
WAIT	Wait for data area sum check completion.
* I'm OK !!	DATA AREA SUM CHECK IS OK
* I'm NG!!, A = xx	Data area sum check is not OK: Sum check value = XX (expected value = 00)
PUSH REC. HIT RETURN	Set the cassette deck to the record mode and press the RETURN key, then the CSAVE operation starts.
CSAVE END	Save operation on the cassette has been completed.
REWIND & PUSH PLAY	Rewind the cassette tape and set the play mode.
HIT RETURN	CLOAD verify operation begins.
* CASSET END	Verify end
Error message Bad	Verify error
Or, the tape is fed to the end without the following message:	The program name is missing.
FOUND: JCAS	

2.9 JSBRAM. X07

Purpose: Sub-CPU RAM check

Requirements: The BASIC must operate normally.

Output message/operation

SUB CPU RAM V1.00 OK * END	Start message Normal end
ERROR ADR = xxxx * END	Error message

Processing time: One minute (approx.)

Note: An error may occur if keys are input continuously at random while the test is being executed.

2.10 JCUNIT. X07

Purpose: Sub-CPU function test

Requirements: The BASIC must operate normally.

Output message	Explanation
* CCUNIT CHECK V1.00	Start message
HIT RETURN	The test starts when the RETURN key is pressed.
IF BUZZ ON, CTRL-S AND HIT "Y"	An error is assumed if the buzzer does not sound. An error is assumed if the buzzer does not stop sounding when the CTRL-S is input. Input Y.
!"#$%&' ( ) *+, –./01234 56789:;< = > ?@ABCDEFGH IJKLMNOPQRSTUVWXYZ[¥]^_' a b c d e f g h i j k l m n o	Displayed approximately two seconds.
Empty screen	Displayed approximately two seconds.
————————————	Displayed approximately four seconds.
HIT "F1"	Input F1.
PRINT "X-07 is NO. 1	Displayed approximately one second.
PUSH " < –"	Input arrow mark (◂).
HIT F6	Input F.
HIT SPACE KEY	Input a blank character by pressing the SPACE key.
KEEP PUSHING "U" KEY UNTIL OFF MESSAGE	Continue pressing the U key.

UUUナナナÜÜÜ444 Same as above.

TAKE YOUR FINGER OFF Release the key.

■♠ ◯ Displayed approximately one second.

◆tim◆cld◆loc◆lst◆run

Beep sounded (do, re, mi, fa, sol, la, and si, do).

Error message

ERROR 1 to ERROR 13: See the following explanations:

1. An error is found in the compare check after data is set in TIME$.
2. An error is found in the compare check after data is set in DATE$.
3. Horizontal cursor position error
4. Vertical cursor position error
5. Other than B is found in character 3 of line 0 on the screen.
6. Character string ! to 0 was output and the data was read and compared, but a compare error has occurred.
7. The data read after the screen clear operation contains other than blank characters.
8. The data read after dots are output to the screen contains other than dots.
9. The data read after clearing dots on the screen contains dots.
10. Same as error 8.
11. Same as error 8.
12. Character variable initial value error
13. FUNCTION key read error

Others:
An error is assumed if the pertinent screen or sound is not obtained according to operations. For example, an error is assumed if the specified buzzer does not sound.

2.11 JRAM. X07

Purpose: Passes parameters to CARD1. MID (Section 2.12) and outputs reports containing execution results to the GPR. This program does not check data selected according to the following operations, that is, the selected data is passed to CARD1. MID
JRAM. X07 is not the test program for the X07.

Requirements: The BASIC must operate normally.
The ROM/RAM switch must be set to ROM.
The RAM card (CARD1) must be mounted.
RAM check is performed in a range other than 2000 to 2FFF.

Output message/ operation	Explanation
* SETCARD1 V1.00	Start message
REPORT (Y/N)?	Reports to be output to GPR after CARD1 execution.
* REPORT *	Header message (Note 1)
!! NO REPORT !!	No data is found for the report.
* REPORT END *	Reporting end
INIT. (Y/N)	Initializing CARDI?
* INITIALIZE *	Initialize operation starts. (Note 2)
* INIT END *	Initialize operation end
ROM SUM (Y/N)	Sum check by using CARDI.
*** ROM SUM ***	ROM sum check start message
DEFAULT ADR B000 – > BFFF C000 – > FFFF	Sum check area after initialization
ADD SUM (Y/N)	Add other area for sum check.
START ADR =	ROM sum check area start address
AREA SIZE =	Area size (bytes) to be added
OK (Y/N)	Confirmation
NEXT (Y/N)	Other additional data? (Three additional areas may be specified, that is, a total of five areas.)
* ROM SUM END	Sum check area address setting completed
RAM R/W (Y/N)	RAM read/write?
* RAM R/W *	
DEFAULT ADR 0000 – > 1FFF	Check area after initialization
ADR MODIFY (Y/N)	Check area to be modified?
START ADR =	Check start address
END ADR =	Check end address
OK (Y/N)	

PW. ON–OFF (Y/N)	Perform check after power off?
GALLOP (Y/N)	Galloping check?
* GALLOP *	
DEFALT ADR	Check area after initialization
0000 – > 1FFF	
ADR MODIFY (Y/N)	Check area to be modified?
START ADR =	Check start address
END ADR =	Check end address
OK (Y/N)	
*** SET RAM END ***	End message
	Card 1 generation end. Turn power off, remove card 1, install it on the X-07 to be checked, turn power on, then the program begins running.

Notes: 1. *In addition to the message, the question is whether deletion is to be performed after the report is output to the GPR.*
See Section 2.12 for report contents.

2. *The contents of initialized card 1*
   1. *Address 2800 contains "love".*
   2. *The following are checked:*
      RAM read/write (0000 to 1FFF)
      ROM sum check (B000 to BFFF and C000 to FFFF)
      Power on/off (0400 to 1FFF)
      Galloping check (0000 to 1FFF)
3. *The report area is deleted and initialized.*
4. *Display error flag is initialized.*

Others: The RAM read/write and galloping tests use the same start and end address areas, that is, the same address space is checked. The last specified start and end addresses are used.

2.12 CARD1.MID (See Section 4.4.1 for Preparations.)

Purposes: When the BASIC does not operate normally, this program allows operations to be performed with a minimum of resources under control by using the keyword love.
The system RAM is checked and the system ROM sum check value is obtained. In this case, the RAM area other than the space from address H'2000' to address H'2FFF' can be checked.

Requirements: Control must be passed by using the keyword love.
The ROM/RAM switch must be set to ROM.

Functions

1. Obtains the contents of interface chip registers saved before control is passed to the BASIC. (See Table 2.12.1, Interface Chip Registers for details.)
2. Performs sum check for memory devices such as the system ROM.
3. Performs read/write check for memory devices such as the system RAM (other than the range from 2000 to 2FFF).
4. Data holding check after:
   Power off → on → off → on
5. Performs system RAM galloping check.
6. Performs reporting (See Section 2.12 (Report Output Example) for details).

Note: Tests for items 2–5 are specified by support program JRAM. X07.
Areas must be specified for items 2, 3, and 5.
For item 6, data can be output to the GPR by using JRAM. X07.

Output message/operation	Explanation
* C. RAM-CARD V1.00	Start message
* REG 00, 02, A2, E3, * 80, C3, 05, A5	Contents of interface chip registers 0 ~ 7
–ROM SUM START B000H – > BFFFH = 24H C000H – > FFFFH = AEH –ROM SUM END	Sum check value display
–RAM R/W START ST = 0000, SP = 1FFF DATA (1) END DATA (2) END –RAM R/W END	 Start and end addresses Test order: DATA (1): 00, 01, ..., FF Test order: DATA (2): FF, FE, ..., 00 Read/write operations by incrementing addresses
–P ON/OFF START (1) 400H – – > 1FFFH	Address fixed: H'400' to H'1FFF' Writes data pattern 00, 01, ..., FF in this order by incrementing addresses. After this message is output, the X-07 system is set to the off state. Press the ON key when necessary.
–P ON/OFF END (1) RESET !	After the ON key is pressed, the read check is performed. If the check is OK, this message is output. Press the RESET switch.

Start message
REG message

–P ON/OFF START (2)	Writes data pattern FF, FE, ..., 00.
400H –– > 1FFFH	Press the ON key when necessary.
–P ON/OFF END (2)	If the test is OK, the message is output.
–GALLOP START	
ST = 0000, SP = 1FFF	
LOOP= 00	Loop test starts with the initial value 00.
DATA (00)	The test is carried out with data items set to 00 except for the target address.
DATA (FF)	The test is carried out with data items set to FF except for the target address.
	The loop has no end point. Press the RESET to stop the test.

Note: The same start and end address areas are used for the RAM read/write and galloping check; hence, the same values are used respectively.

Error messages

! RAM R/W ERR
E. ADR = xxxx
E. DAT = xx T. DAT = xx

Report output example

```
*** REPORT ***

*C.RAM-CARD V1.00
* REG  00,02,A2,C3,
*      80,C3,05,0A
-ROM SUM START
B000H->BFFFH = 24H
C000H->FFFFH = AEH
-ROM SUM END
-RAM R/W START
ST=0000,SP=1FFF
DATA(1) END
DATA(2) END
-RAM R/W END
-P ON/OFF START(1)
400H-->1FFFH
*C.RAM-CARD V1.00
* REG  00,02,A2,C3,
*      80,C3,05,0A
-P ON/OFF END(1)
RESET !
*C.RAM-CARD V1.00
* REG  00,02,A2,C3,
*      80,C3,05,0A
-P ON/OFF START(2)
400H-->1FFFH
*C.RAM-CARD V1.00
* REG  00,02,A2,C3,
*      80,C3,05,0A
-P ON/OFF END(2)
-GALLOP START
ST=0000,SP=1FFF
LOOP=00
DATA(00)
*** REPORT END ***
```

Report output message

This is output when the display output message cannot be read or display output becomes impossible because of X-07 failure.
Generally, the display output messages are used.
The following are unique as report output messages:

! DISP ERROR X

X = 1: Report output is impossible because data is being output from the sub-CPU.

X = 2: Report output is impossible because the data to be output to the sub-CPU is not received by the sub-CPU.

* C. RAM CARD END

This message is additionally output when the galloping check is not performed.

Table 2.12.1 Interface Chip Registers

Bit name / Name (Address)	D7	D6	D5	D4	D3	D2	D1	D0	
R0 (F0)	(TS0) TRQ1	(TS1) TRQ0	BIE	ALMIE	XTIE	XRIE	TIE	RIE	* Interrupt control REG
R1 (F1)	$\overline{TB7}$	$\overline{TB6}$	$\overline{TB5}$	$\overline{TB4}$	$\overline{TB3}$	$\overline{TB2}$	$\overline{TB1}$	$\overline{TB0}$	* External BUS receive REG
R2 (F2)	CBSY	ALRM	AUX1	AUX2	0	BGI	XTRE	XRRF	* Flag REG
R3 (F3)	Meaningless								
R4 (F4)	FCAS	BRGST	CNTR	LEO	MD1	MD0	BZON	REM	* Mode REG
R5 (F5)	Meaningless								
R6 (F6)	$\overline{CTS}$	0	FE	OE	PE	TXE	RXRDY	TXRDY	* UART status REG
R7 (F7)	D7	D6	D5	D4	D3	D2	D1	D0	* UART data REG

Report message correspondence

Example R0 ~ R3

* REG 00, 02, A2, C3,

* 80, C3, 05, 0A

R4 ~ R7

Processing time

Galloping

Area size	Time	Explanation
2k bytes	1 hour	30 minutes for each DATA (00) and DATA (FF)
8k bytes	16 hours	8 hours for each DATA (00) and DATA (FF)

2.13 JRAM2. X07

Purpose: Passes parameters to CARD2. MID (Section 2.14).
This program only sets data selected according to the following operations in CARD2. MID. JRAM2. X07 is not the test program for the X07.

Requirements: The BASIC must operate normally.
The ROM/RAM switch must be set to ROM.
The RAM card (card 2) must be installed.
RAM check range: Mounted range other than that from 1000 to 1FFF.

Output message/operation	Explanation
* SET CARD2 V1.00	Start message
ROM SUM (Y/N)	Performs the sum check on card 2.
*** ROM SUM ***	ROM sum check set start message
DEFAULT ADR	
4000 –> 5FFF	The sum check value is output unconditionally for each
6000 –> 7FFF	of these areas.
A000 –> AFFF	
ADD SUM (Y/N)	Add other area.
START ADR =	ROM sum check start address
AREA SIZE =	Area size (bytes) to be added
OK (Y/N)	Confirmation
NEXT (Y/N)	Other additional areas?
	(Up to two areas may be added, a total of five areas.)
* ROM SUM END	Sum check area set end
RAM R/W (Y/N)	Performs RAM read/write operations.
* RAM R/W *	
DEFAULT ADR	
8000 –> 97FF	
ADR MODIFY (Y/N)	Check area to be modified?
START ADR =	Check start address
END ADR =	Check end address
OK (Y/N)	
PW. ON–OFF (Y/N)	To be checked after power is turned off?
* POWER ON –> OFF	
DEFAULT ADR	
8000 –> 97FF	
ADR MODIFY (Y/N)	
START ADR =	
END ADR =	
OK (Y/N)	

GALLOP (Y/N) Galloping check to be carried out?
* GALLOP *
DEFAULT ADR
8000 – > 97FF
ADR MODIFY (Y/N)

START ADR =
END ADR =
OK (Y/N)

*** SET RAM END ***

Notes: 1. Since the same start and end addresses are used for the RAM read/write, power on/off, and galloping checks, the same address space is tested.
The last specified start and end addresses are used.
Card 2 is automatically initialized when this program is executed.

2. Card 2 contents after initialization
1. RAM read/write (8000 to 97FF)
ROM sum check (4000 to 5FFF, 6000 to 7FFF, and A000 to AFFF)
Power on/off check (8000 to 97FF)
Galloping check (8000 to 97FF)
2. Display error flag is initialized.
3. Printer error flag is initialized.

2.14 CARD2.MID (See Section 4.4.2 for Preparations)

Purpose: Performs RAM and ROM sum check for other than the X-07. These tests can be carried out by receiving control by means of the keywore love even if "love" has been written at an address greater than 2000 (on the FFFF side). If the printer is connected, the message is output to the printer and display device.

Requirements: Control must be passed by means of the keyword love.
The X-07 must be normal.

Functions:

1. Performs ROM sum check.

2. Performs RAM read/write check (other than the range 1 000 to 1FFF).

3. Data holding check in other than the range 1000 to 1FFF under the following condition:
   Power off → on → off → on

4. Performs a RAM galloping check (other than the range 1000 to 1FFF).

Note: Tests 1 ~ 4 can be specified by support program JRAM2. X07.
Test areas can be specified for tests 1 ~ 4.

Output message/operation	Explanation
*OPTION MEM V1.00	
-ROM SUM START	
4000H->5FFFH = 00H	Output in any case.
6000H->7FFFH = 00H	
A000H->AFFFH = 00H	
B000H->BFFFH = 24H	Additional registration in JRAM2. X07.
C000H->FFFFH = AEH	
-ROM SUM END	
-RAM R/W START	
ST=8000, SP=97FF	Check range
?RAM R/W ERR.	Error message
E.ADR=8000	
E.DAT=FF T.DAT=00	
DATA(1) END	Set 00, 01, 02, ..., FF beginning from the start address.
?RAM R/W ERR	Error message
E.ADR=8001	
E.DAT=FF T.DAT=FE	
DATA(2) END	Set FF, FE, FD, ..., 00 beginning from the start address.
-RAM R/W END	
-P ON/OFF START(1)	
8000->97FF	Check range
*OPTION MEM V1.00	Turn power off.
?RAM R/W ERR	Error message
E.ADR=8000	
E.DAT=FF T.DAT=00	
-P ON/OFF END(1)	Set 00, 01, 02, ..., FF beginning from the start address.
RESET ?	Press the RESET switch.
*OPTION MEM V1.00	
-P ON/OFF START(2)	Set FF, FE, FD, ..., 00 beginning from the start address.
8000->97FF	
*OPTION MEM V1.00	
?RAM R/W ERR	
E.ADR=8001	
E.DAT=FF T.DAT=FE	
-P ON/OFF END(2)	
-GALLOP START	
ST=8000, SP=97FF	
LOOP=00	Output the loop count (00 to FF).
DATA(00)	Set 00 in area except for the target address.
?GALLOP ERR	
E.ADR=8001	
E.DAT=FF T.DAT=00	

Note: *E. ADR:* *Error address*
E. DAT: *Error data*
T. DAT: *Write data*

Other messages	Explanation
! DISP ERR X	X = 1: Output is impossible because data is being output from the sub-CPU. X = 2: Output is impossible because the data to be output to the sub-CPU cannot be received by the sub-CPU. The message is output to the printer.
* OPTION MEM END	This message is output when the galloping check is not carried out.
! GPR ERR	Output is impossible because the GPR is busy. This message is output to the display device.

Processing time

Galloping

Area size	Time	Explanation
2k bytes	1 hour	30 minutes for each DATA (00) and DATA (FF)
8k bytes	16 hours	8 hours for each DATA (00) and DATA (FF)

2.15 JCARDS.X-07

Purpose: Transfers the RAM card contents to the AS-100 without alteration.

Requirements: The ROM/RAM switch must be set to ROM.

Operation procedures: The following must be set by the AS-100 before it is executed:

A > RSHND
A > SUBMIT TTY3D or SUBMIT TTY3DN
A > BASIC JCARDR

Connect the X-07 and AS-100 COM2 via level converter RS-232C and input the commands listed above in the AS-100.
Specify the file to be received and storing file to be used on the AS-100 side by using JCARDR, then execute the program.

Output message

** CARD SEND END	Transmission end message

2.16 JCARDR.X-07

Purpose: Transfers data from the AS-100 to the X-07 without alteration.

Requirements: The ROM/RAM switch must be set to ROM.

Operation procedures: The following must be set on the AS-100 side before program execution:

A > RSHND
A > SUBMIT TTY3D
A > BASIC JCARDS

Connect the X-07 and AS-100 COM2 via level converter RS-232C and input the commands listed above.
Specify the file to be transferred and its destination on the AS-100 side by using JCARDS, then execute the program.

Output message

** CARD RECEIVE

xxxx	Monitor and output the number received bytes.
** RECEIVE END	End message

3. AS-100 PROGRAM OPERATIONS

3.1 JTRANSA. BAS

Purpose:	ASCII data transmission and reception
Operation procedures:	Operate according to the following messages:

```
***** TRANSFER ASCII DATA *****

* IF YOU GET ASCII DATA FROM TTY: , USE TTY30N
* IF YOU PUT ASCII DATA  TO  TTY: , USE TTY30 OR TTY30N

 TTY30N : RSINIT TTY: 300  8DS BUFSIZ(4096,4096) NOWAIT
 TTY30  : RSINIT TTY: 300  8DS BUFSIZ(4096,4096) WAIT NOAUTOX

* IF YOU USE X07 AS SOURCE OR DESTINATION
 X07 OPENATION
      DATA --> X07
         : INIT #5,"COM:",300,"D"
         : EXEC &NEEIF
      DATA <-- X07
         : INIT #1,"COM:",300,"D"
         : LIST #1

* SOURCE      (TTY:/XXXXXX.XXX)            = ?JCARDS.X07
* DESTINATION (TTY:/LST:/CRT:/XXXXXX.XXX) = ?CRT:

?I  OK (Y/N)     ?Y


********** START GET &PUT ASCII DATA **********

 SOURCE      FILE = JCARDS.X07

 DESTINATON FILE = CRT:

10 REM CARD->AS-100
20 INIT #1,"COM:",300,"D"
30 I=&H2000
40 FORJ=I TO &H2FFF
50  A=PEEK(J)
60  OUT #1,A
70 NEXT J
100 PRINT"** CARD SEND END"
110 END


********** END  TRANSFER  **********

 TRANSFER SIZE    =  163

 SOURCE      FILE = JCARDS.X07

 DESTINATION FILE = CRT:
```

Note: Do not execute this program with the following specifications: Input = TTY and output = LST.

3.2 JCARDR. BAS

Purpose: Stores the card-unit information received from the X07 in a XXXXXX.MID file. Or X07's program unit data may be stored.

Operation procedures: Operate according to the following messages:

```
****** RECEIVE MID-DATA FROM " X07 "

* AS-100 : RSHNO
  TTY3D  : RSINIT TTY: 300 8DS BUFSIZ(4096,4096) WAIT NOAUTOX

* X07    : JCARDS / SAVE "COM:",300,"D"

* RECEIVE DATA-FILE                = ?TEST
* 1. DATA-SIZE    2. 13-NULL (1/2) ?1
* RECEIVE DATA-NUM.                = ?4096
      OK (Y/N)                       ?Y



********** START RECEIVING **********

 DATA FILE NAME = TEST

 TRANSFER DATA  = 4096

**********  END  RECEIVING **********
 MID-DATA  SIZE =  4096

 DATA-FILE NAME = TEST.MID
```

Note: For program-unit data reception, select 2.13-NULL.
Mid is automatically appended, so do not specify MID in the XXXXXX.MID.

3.3 JCARDS. BAS

Purpose: Transmits the file received and stored with JCARDR. BAS to the X-07.

Operating procedures: Operate according to the following messages:

```
***** SEND MID-DATA TO " X-07 "

* AS-100 : RSHWD
 TTY3DW  : RSINIT TTY: 300 8BS BUFSIZ(4096,4096) NOWAIT
 TTY3D   : RSINIT TTY: 300 8BS BUFSIZ(4096,4096) WAIT NOAUTOX

* X07    : JCARDR / LOAD "CON:",300,"D"

* SEND MID-DATA FILE              = ?TEST
* 1. DATA-SIZE   2. 13-NULL (1/2) ?1
* SEND DATA-NUM.                  = ?4096
   OK (Y/N)                         ?Y
```

```
********** START SENDING ***********

 MID-DATA NAME = TEST

 TRANSFER DATA  = 4096

**********  END  SENDING **********

 PROGRAM SIZE =  4096
 MID DATA NAME = TEST.MID
```

Note: For program-unit data reception, select 2.13-NULL.
For card-unit data reception, select 1. DATASIZE.
MID is automatically appended, so do not specify MID in XXXXXX. MID.

3.4 JFDUMP.BAS

Purpose: Edits contents of each file in the list format and outputs the resultant data. Use this program to check whether the contents of XXXXXX. MID received from the X-07 is correct.

Operation procedures: Operate according to the following messages:

```
***** FILE DUMP START *****

* IF YOU GET DUMP DATA FROM TTY: ,USE TTY3D
  TTY3D  : ASINIT TTY: 300 8BS BUFSIZ(4096,4096) WAIT NOAUTOX

* IF YOU USE X07 AS SOURCE
 X07 OPERATION
      X07 (RAM-CARD) --> MID-CODE DATA
         : * USE PROGRAM JCARDS IN X07
      X07'S PROGRAM
         : * SAVE "COM:",300,"D"


 SOURCE       FILE  (TTY:/XXXXXX.XXX)       = ?JCARDS.X07
 DESTINATION  FILE  (CRT:/LST:/XXXXXX.XXX) = ?CRT:

 DUMP     ADDR = ?0
 1.DATA SIZE   2. 13-NULL  (1/2) ?1
 DUMP     SIZE = ?200

IT  OK (Y/N)      ?Y


*00000    00 00 0A 31 30 20 52 45    40 20 43 41 52 44 2D 3E
*00010    41 53 20 31 30 30 00 0A    32 30 20 49 4E 49 54 20
*00020    23 31 2C 22 43 4F 40 3A    22 2C 33 30 30 2C 22 44
*00030    22 0D 0A 33 30 20 49 3D    26 48 32 30 30 30 00 0A
*00040    34 30 20 46 4F 52 4A 3D    49 20 54 4F 20 26 48 32
*00050    46 46 46 00 0A 35 30 20    20 41 30 50 45 45 4B 28
*00060    4A 29 00 0A 36 30 20 20    4F 55 54 20 23 31 2C 41
*00070    0D 0A 37 30 20 4E 45 58    54 2B 4A 00 0A 31 30 30
*00080    20 50 52 49 4E 54 22 2A    2A 20 43 41 52 44 20 53
*00090    45 4E 44 20 45 4E 44 22    00 0A 31 31 30 20 45 4E
*000A0    44 00 0A 00 00 00 00 00    00 00 00 00 00 00 00 00
*000BG    00 00 00 00 00 00 00 00    00 00 00 00 00 00 00 00
*000C0    00 00 00 00 00 00 00 00    00 00 00 00 00 00 00 00

*** FILE DUMP END ***
```

Note: DUMP ADR: Dump start address
It is advisable to select 2.13-NULL to check XXXXXX. MID stored in program units.
Do not use this program with specifications input = TTY and out put = LST.

3.5 X07. BAS

Purpose: This is prepared to use AS-100 keyboard instead of X-07.

Operation procedures: No special instructions to be given.
Execute after the following:
RSHND
SUBMIT TTY3D or SUBMIT TTY3DN
X-07 preparation: INIT#5, "COM:", 300, "D"
EXEC & HEEIF

Note: Press the CANCEL key to terminate the program.

```
********** AS-100 TO X07 **********

* SET MESSAGE TO X07
?10 REM TEST
?20 ?"*** CANCEL ***"
?30 ?"     X-07"
?40 LOCATE 0,0:?"&&";
?50 GOTO 20
?RUN
?EXEC &HEE33
?LPRINT[0,1]
?
```

3.6 TTY3D. SUB

```
rsinit tty: 300 8os bufsiz(4096,4096) wait noautox
```

3.7 TTY3DN. SUB

```
rsinit tty: 300 8os bufsiz(4096,4096) nowait
```

Note: RSINIT command (RS232C port assignment) is used for these two programs, where:

tty: *COM2 is used.*

300: *Baud rate*

80S: *Equivalent to mode D of X-07*

BUFSIZ: *Send/receive buffer size*

WAIT/NOWAIT: *Specifies whether null codes are stored in the buffer when there is no reception data, when data transmission to the AS-100 takes.*
WAIT: Waits for a reception interrupt.

NOAUTOX: *Specifies whether the &H11 and &H13 codes (for the select and deselect assignment) are to be ignored. This is valid only for reception.*
NOAUTOX: &H11 and &H13 are treated as data items.

Others: For faster transfer or for 8ES transmission, specify the respective parameters in the X-07 and AS-100.

4. OTHERS

4.1 RS232C Cables and Connectors

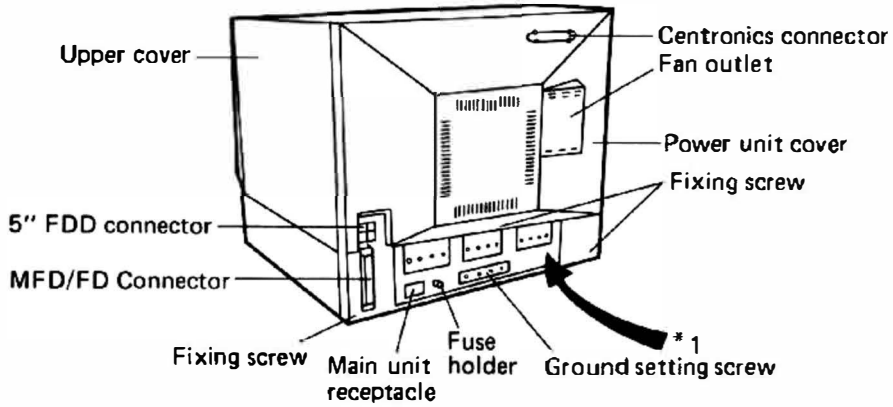

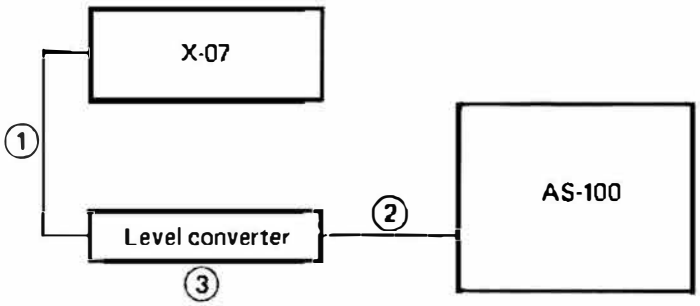

*1: Install connector ② in this port.

① X-07 associated RS232C cable (9 pins)

② RS232C cable used in AS-100 (25 pins)

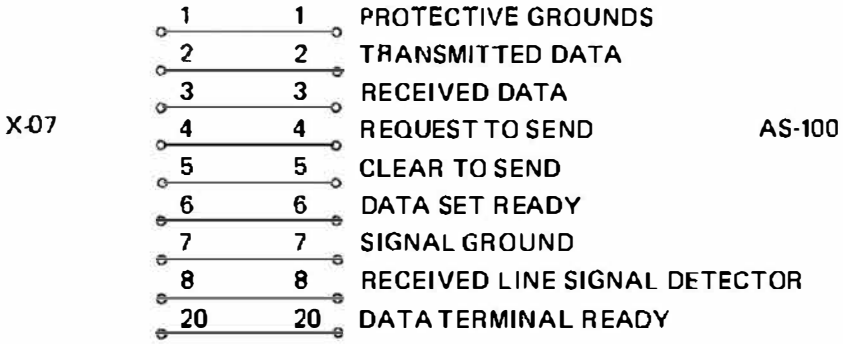

③ Switches on level converter panel

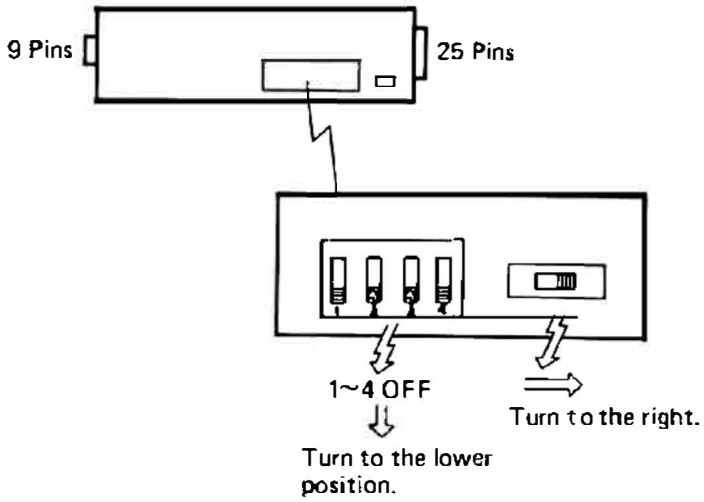

4.2 ASCII File Transfer (XXXXXX. X-07)

① AS-100 → X-07

Operation procedures (X-07)

- INIT #5, "COM:", 300, "D" (RS232C assignment)
- EXEC &HEE1F
- Reception preparation completed.
- Data reception
- After reception end: Turn the switch from OFF to ON.

Operation procedures (AS-100)

- A > RSHND
- A > SUBMIT TTY3D or
  A> SUBMIT TTY3DN (RS232C assignment)
- A > BASIC JTRANSA
- SOURCE = ASCII file name to be transmitted
- DESTINATION = TTY: (Output to RS232C)
- OK (Y/N) Input Y. (Input Y after X-07 reception preparation is completed.)
- Data transmission

② X-07 → AS-100

Operation procedures (X-07)

- Load the program in the text area.
- INIT #1, "COM:", 300, "D" (RS232C assignment)
- LIST #1 (Execute after AS-100 reception preparation is completed.)
- Data transmission

Operation procedures (AS-100)

- A > RSHND
- A > SUBMIT TTY3DN (RS232C assignment)
- A > BASIC JTRANSA
- SOURCE = TTY: (Input from RS232C)
- DESTINATION = ASCII file name to be received
- OK (Y/N) Input Y.
- Reception preparation completed.
- Data reception

Note: Start X-07 data transmission about in less than 10 seconds after AS-100 reception preparation is completed.

4.3 Intermediate (Machine) Code File Transfer (XXXXXX. MID)

① AS-100 → X-07

Operation procedures (X-07)

①-1 RAM card data (4096 bytes) reception

- o Load JCARDR. X07 in the text area, then execute it.
- o Reception preparation completed.
- o Transfer received data to the RAM card at the same time it is received.

①-2 Program-unit data reception

- o LOAD "COM:", 300, "D" (RS232C assignment)
- o Reception preparation completed.

Operation procedures (AS-100)

- o A > RSHND
- o A > SUBMIT TTY3D or
  A > SUBMIT TTY3DN (RS232C assignment)
- o A > BASIC JCARDS
- o SEND MID-DATA FILE = Intermediate code file name to be transmitted
  (Note that the qualifier .MID is appended automatically.)
- o Select 1. DATA-SIZE or 2.13-NULL.
- o For DATA-SIZE, specify the transmission data size.
- o OK (Y/N) Input Y. (Input after the X-07 reception preparation is completed.)
- o Data transmission

Note: Select 1. DATA-SIZE for card-unit data transmission.
Select 2. 13-NULL for program-unit data transmission.

② X-07 → AS-100

Operation procedures (X-07)

②-1 RAM card data (4096 bytes) transmission

- o Load JCARDS. X07 in the text area, then execute it.
  (Execute after AS-100 reception preparation is completed.)
- o Data transmission

②-2 Transmitting a program from the text area

- o SAVE "COM:", 300, "D" (RS232C assignment)
  (Execute after the AS-100 reception preparation is completed.)
- o Data transmission

Operation procedures (AS-100)

- • A > RSHND
- o A > SUBMIT TTY3D (RS232C assignment)
- o A > BASIC JCARDR
- o RECEIVE DATA FILE = Intermediate code file name to be received
  (Note that the qualifier .MID is appended automatically.)
- o Select 1. DATA-SIZE or 2. 13-NULL.
- o For 1. DATA-SIZE, specify the reception data size.
- o OK (Y/N) Input Y.
- o Reception preparation completed.
- o Data reception

Note: CARD1. MID and CARD2. MID are machine language programs and are referred to as intermediate code files for convenience.

4.4 CARD1. MID, CARD2. MID Preparations and Procedures

Store CARD1.MID or CARD2.MID in the RAM card (with 4k byte backup) by using JCARDR.X07 on the X-07 side with the ROM/RAM switch set to ROM.

4.4.1 CARD1. MID outline

This program (machine language) is written in the 4k byte RAM card to check devices such as the RAM.
Before control is transferred to the BASIC, execute this program by use of the love keyword.

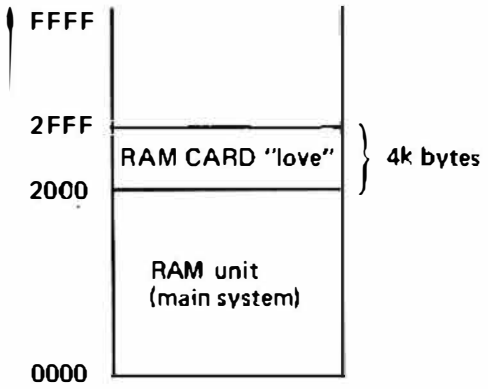

Note: Keyword love is written at address H'2800'.

4.4.2 CARD1. MID generation

1. Load the JCARDR. X07 in the normal X07, then execute the program. (ROM/RAM switch must be set to ROM.)
2. Transfer the CARDI. MID from the AS-100. (See Figure 1 for details.)
3. Initialize the text area by using the NEW command, then load the JRAM. X07 in the text area execute it.
   (When the JRAM. X07 is executed, parameters are written in the CARDI. MID and keyword love is prepared. (See Figure 2 for details.)

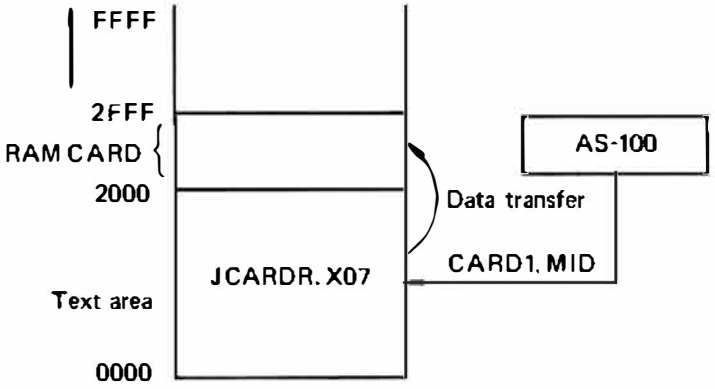

Fig. 1

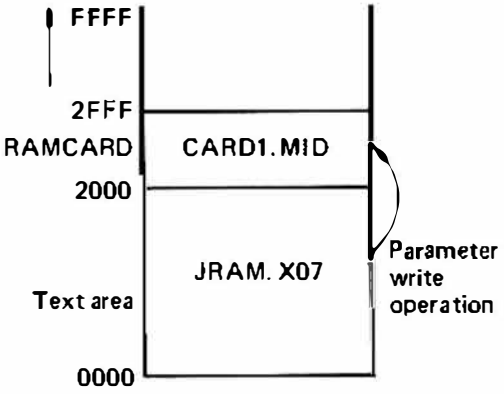

Fig. 2

4.4.3 CARD1. MID execution

1. Install the RAM card generated as explained in Section 4.4.2 in the X-07 to be checked. The ROM/RAM switch of the X-07 must be set to ROM.

2. Turn power on, then control is passed to the CARD1. MID in the RAM card through keyword love.

3. To terminate the program, press the RESET switch.

4. To output a report, remove the RAM card from the X-07 to be checked, then install it in the normal X-07 and execute the JRAM. X07.

Note: Execute the FSET4096 before generating the CARD1. MID.

4.4.4 CARD2. MID outline

This program (machine language) is written in the RAM to check the RAM card and 8k byte option chip.
Execute this program by use of keyword love before control is passed to the BASIC.

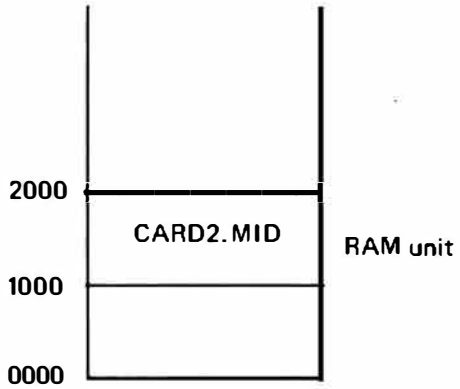

Note: Keyword love is written at address H'1800'.

4.4.5 CARD2. MID generation

1. Load the JCARDR. X07 in the normal X-07 and execute the program. (The ROM/RAM switch must be set to ROM.)

2. Transfer the CARD2. MID from the AS-100. (See Figure 3 for details.)

3. Initialize the text area by using the NEW command, then load the JRAM2.X07 in the text area and execute it.
   (When the program is executed, parameters are written in the CARD2. MID in the RAM card. Keyword love has not been written yet.) (See Figure 4 for details.)

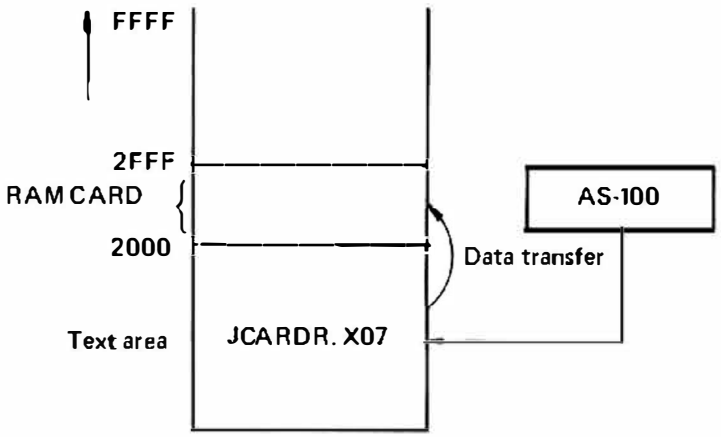

Fig. 3

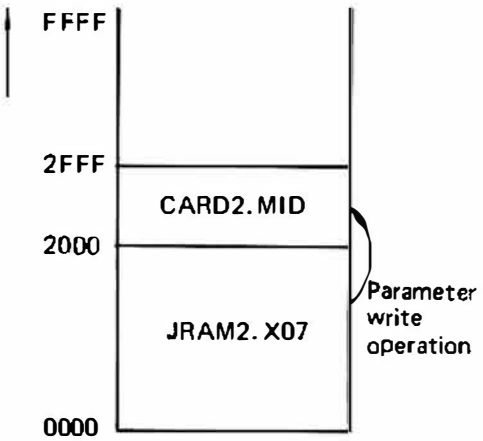

Fig. 4

4.4.6 CARD2.MID execution

1. Install the RAM card generated as explained in Section 4.4.5 in the X-07 to be checked. The ROM/RAM switch of the X-07 to be checked may be set to ROM or RAM.

2. The following two operations are used depending on whether the 8k byte option RAM chip is mounted or not.

   2.1 When the 8k byte option RAM chip is mounted (the ROM/RAM switch must be set to RAM)

   Since the RAM card address ranges from H'4000' to H'4FFF', execute the EXEC &H4F40 and load the CARD2.MID from the RAM card in the RAM of the main system beginning from an address greater than H'1000'.

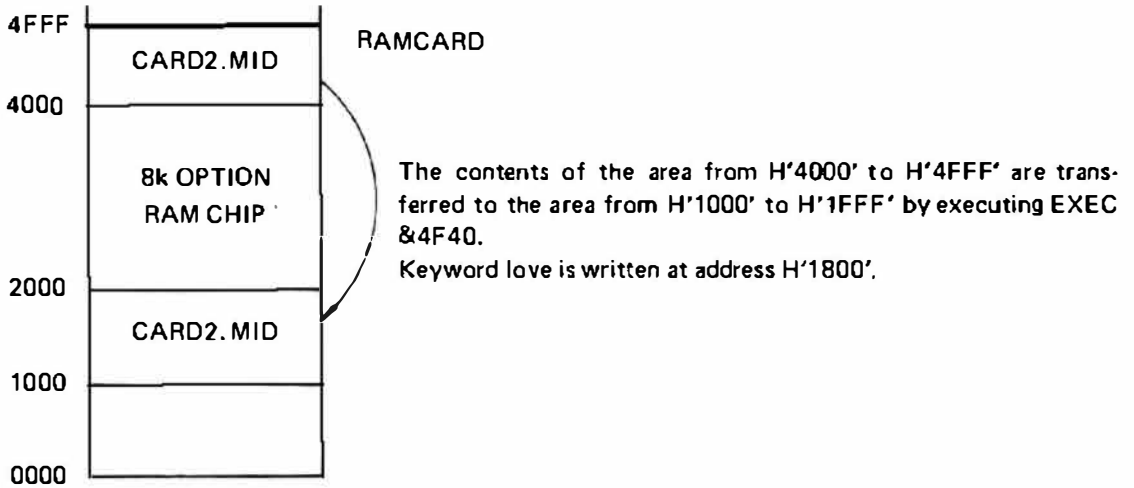

   2.2 When the 8k byte option RAM chip is not mounted (the ROM/RAM switch must be set to ROM.)

   Since the RAM card address ranges from H'2000' to H'2FFF', execute EXEC &H2F20 to load the CARD2.MID from the RAM card in the RAM of the main system beginning from an address greater than H'1000'.

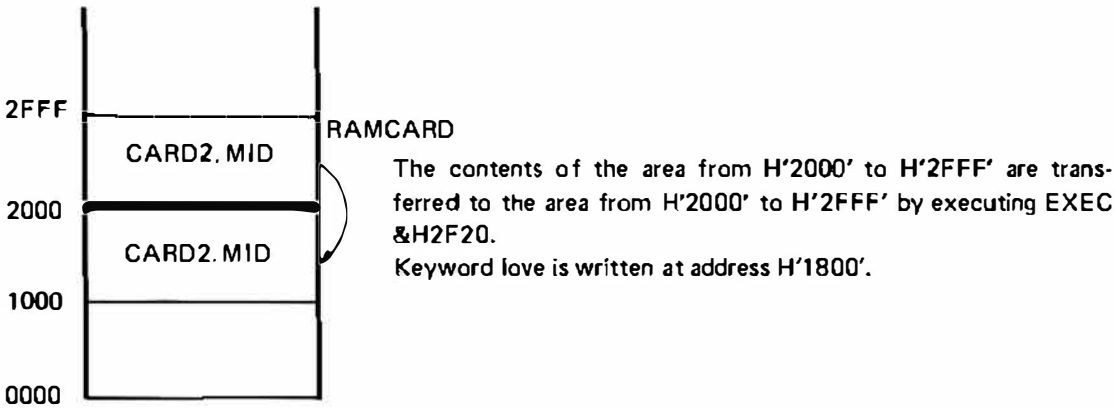

Notes: 1. Execute the FSET4096 before generating the CARD2.MID.
2. When an RAM card containing the CARD2.MID is installed and power is turned on, an error message such as "CREATE SYSTEM?" may be displayed in some cases. Reply "Y", then continue program execution.

5. SIMPLIFIED CHECKS

5.1 Simplified RAM Check (JUSER)

RAM read/write operations can be performed by inputting and executing the following program when the X-07 is operating normally:

```
10 CLS:PRINT"RAM CHECK":A=&H55:PRINT"DATA=";HEX$(A)
20 FOR I=&H2000 TO &H2FFF
30 POKE I,A
40 NEXT I
50 FOR I=&H2000 TO &H2FFF
60 IF A<>PEEK(I)THEN PRINT"ERR ";HEX$(I);" ";HEX$(A):END
70 NEXT I
75 PRINT"* OK"
80 IF A=&HAA THEN PRINT "*END":END
90 A=&HAA:PRINT"DATA=";HEX$(A):GOTO 20
```

See Section 2.3 JUSER.X07 for details.

5.2 Simplified ROM Check

The ROM sum check value can be obtained by inputting and executing the following program when the X-07 is operating normally:

Start address

End address

```
10 A=0
20 FOR I=&HB000 TO &HBFFF
30 A=PEEK(I)+A:IF A>=256 THEN A=A-256
40 NEXT I
50 PRINT HEX$(A):END
```

5.3 Simplified Parallel Port Check

Connect the color graphic printer (X-710), then operate as follows:

(1) LPRINT [*1,*2] [RETURN]

where: *1 is the character size (1~16).

*2 is the color assignment (0 for black, 1 for blue, 2 for green, and 3 for red).

(2) Load or generate the pertinent program in the text area.

(3) LLIST [RETURN]

5.4 Simplified Serial Port Check

(1) Loop test

Arrange pin connections for the loop test in which signals are returned in the serial port or level converter in the system. (See Section 2.5 JSERI.X07 for details.)

Execute the following program:

```
10 INIT #1, "COM:", 300, 'D'
20 FOR I = 1 TO 10
30 OUT #1, &H55
40 PRINT HEX$(INP(#1)); I
50 NEXT I
60 END
```

Input/output count is 10.
Data value is 55 in hexadecimal notation.

(2) Communication check

Connect two X-07s, then operate as follows:

X-07 (A)	X-07 (B)
1. Load or generate the program in the text area.	1. NEW [RETURN]
2. Execute SAVE"COM:" or SAVE"OPT:"	2. Execute LOAD "COM:" or LOAD "OPT:"
	3. Execute a LIST command to confirm that the program has been transferred from the X-07 (A).

5.5 Simplified Cassette Check

Execute the CSAVE and CLOAD commands to confirm that the program has been stored normally in the tape cassette.

1. Load or generate the program in the text area.
2. Prepare the cassette recorder for recording.
3. CSAVE"TST" [RETURN]
4. After SAVE is completed, rewind the cassette tape, then CLOAD? "TST" [RETURN]
5. If normal, the FOUND message is output and the cursor blinks.
   If abnormal or if an error occurs, the FOUND message is not output. A BAD message is output in this case.

CANON INC.

COPYRIGHT © 1983
BY
CANON INC.
Printed in Japan
SEPT, 1983

EY8-0310-211