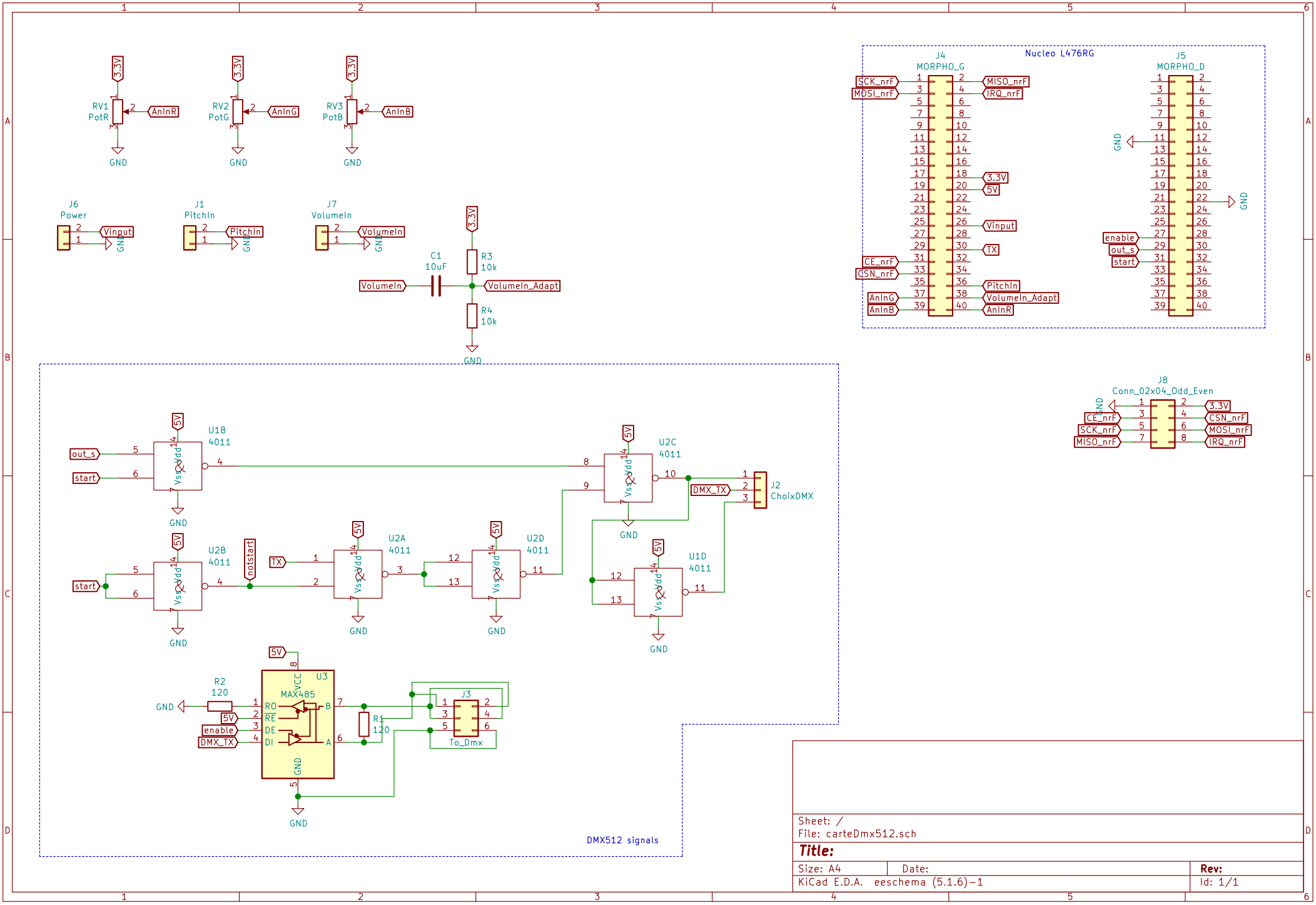
RV1
PotR
RV2
PotG
RV3
PotB
3.3V
AnInR
AnInG
AnInB
GND
J6
Power
Vinput
J1
PitchIn
J7
VolumeIn
C1
10uF
R3
10k
R4
10k
VolumeIn_Adapt
Nucleo L476RG
J4
MORPHO_G
J5
MORPHO_D
SCK_nrF
MOSI_nrF
MISO_nrF
IRQ_nrF
CE_nrF
CSN_nrF
5V
TX
enable
out_s
start
J8
Conn_02x04_Odd_Even
U1B
4011
U2B
4011
U2A
4011
U2D
4011
U2C
4011
U1D
4011
notstart
DMX_TX
J2
ChoixDMX
R2
120
U3
MAX485
RO
RE
DE
DI
VCC
R1
120
J3
To_Dmx
DMX512 signals
Sheet: /
File: carteDmx512.sch
Title:
Size: A4
Date:
Rev:
KiCad E.D.A. eeschema (5.1.6)-1
Id: 1/1