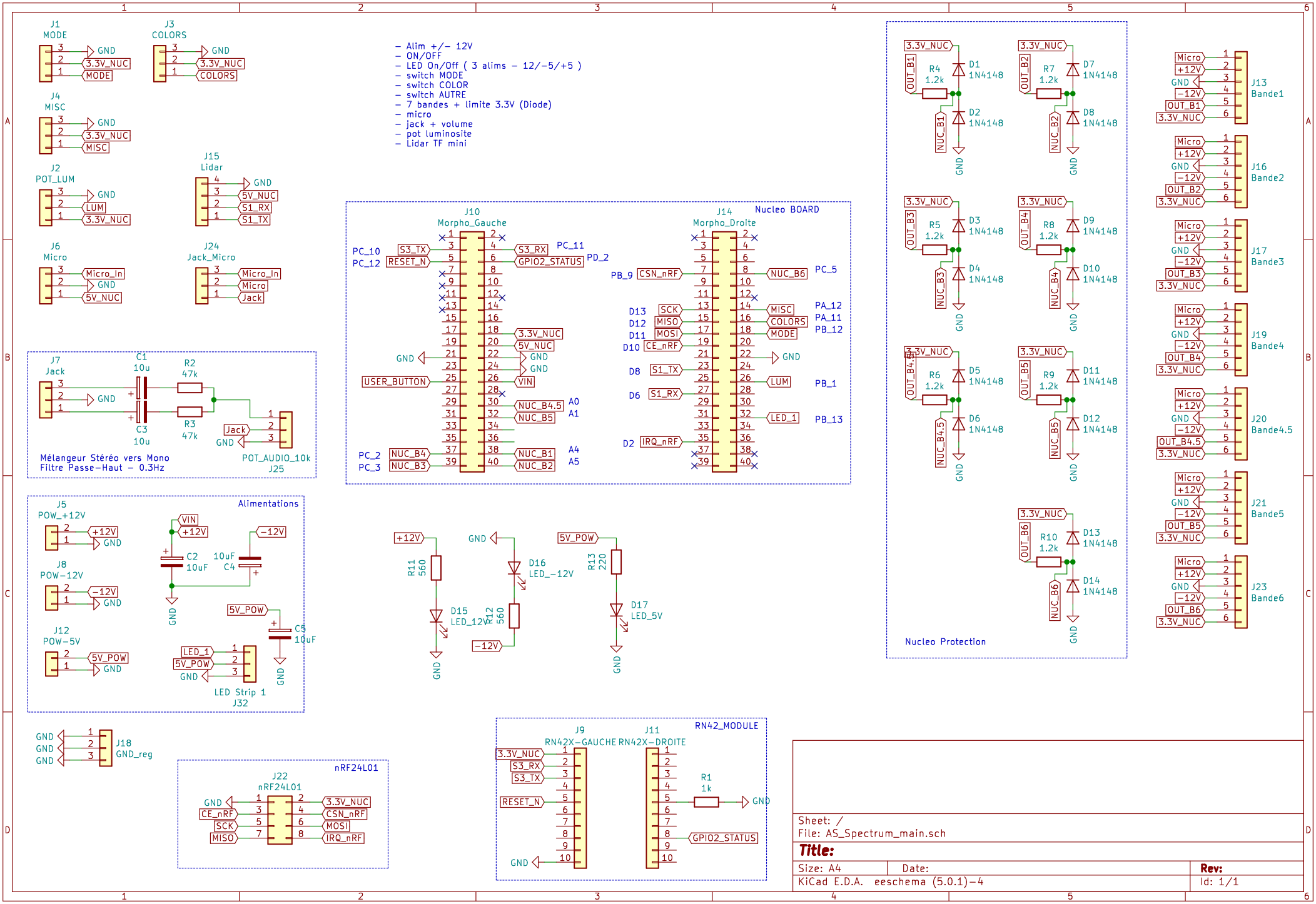
J1 MODE
J3 COLORS
J4 MISC
J2 POT_LUM
J15 Lidar
J6 Micro
J24 Jack_Micro
– Alim +/– 12V
– ON/OFF
– LED On/Off (3 alims – 12/–5/+5)
– switch MODE
– switch COLOR
– switch AUTRE
– 7 bandes + limite 3.3V (Diode)
– micro
– jack + volume
– pot luminosite
– Lidar TF mini
J10 Morpho_Gauche
J14 Morpho_Droite
Nucleo BOARD
J7 Jack
C1 10u
R2 47k
R3 47k
C3 10u
Mélangeur Stéréo vers Mono
Filtre Passe-Haut – 0.3Hz
POT_AUDIO_10k
J25
Alimentations
J5 POW_+12V
J8 POW-12V
J12 POW-5V
C2 10uF
C4 10uF
C5 10uF
LED Strip 1
J32
R11 560
R12 560
R13 220
D15 LED_12V
D16 LED_-12V
D17 LED_5V
J18 GND_reg
nRF24L01
J22 nRF24L01
J9 RN42X-GAUCHE
J11 RN42X-DROITE
RN42_MODULE
R1 1k
Nucleo Protection
J13 Bande1
J16 Bande2
J17 Bande3
J19 Bande4
J20 Bande4.5
J21 Bande5
J23 Bande6
Sheet: /
File: AS_Spectrum_main.sch
Title:
Size: A4
Date:
Rev:
KiCad E.D.A. eeschema (5.0.1)-4
Id: 1/1