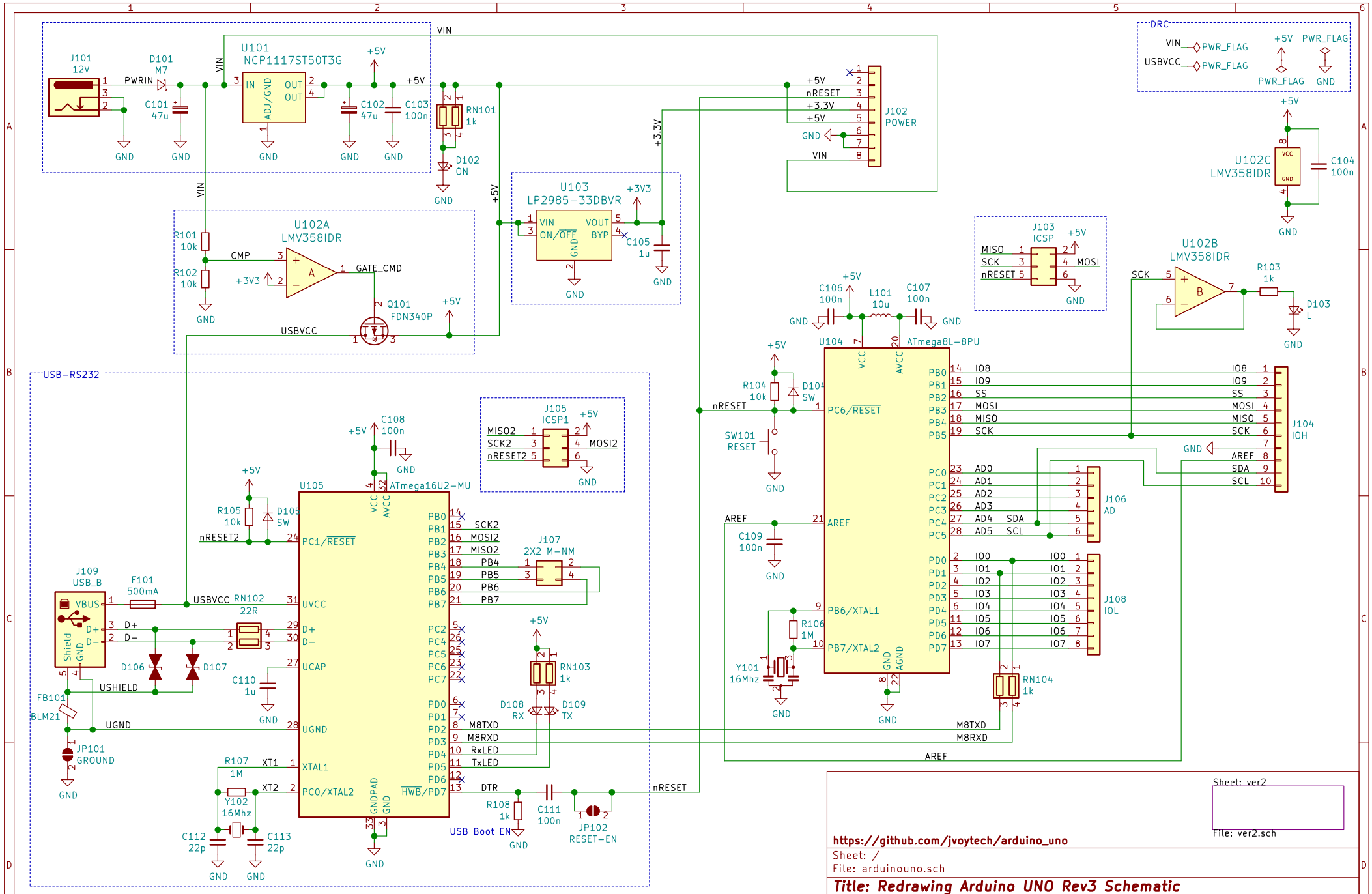
J101
12V
D101
M7
PWRIN
C101
47u
U101
NCP1117ST50T3G
IN
ADJ/GND
OUT
OUT
C102
47u
C103
100n
RN101
1k
D102
ON
VIN
+5V
GND
U102A
LMV358IDR
R101
10k
R102
10k
CMP
+3V3
GATE_CMD
Q101
FDN340P
USBVCC
U103
LP2985-33DBVR
VIN
ON/OFF
GND
VOUT
BYP
+3V3
C105
1u
J102
POWER
nRESET
+3.3V
DRC
PWR_FLAG
U102C
LMV358IDR
VCC
C104
100n
J103
ICSP
MISO
SCK
nRESET
MOSI
U102B
LMV358IDR
R103
1k
D103
L
U104
ATmega8L-8PU
C106
100n
L101
10u
C107
100n
R104
10k
D104
SW
SW101
RESET
PC6/RESET
AREF
C109
100n
PB6/XTAL1
PB7/XTAL2
R106
1M
Y101
16Mhz
RN104
1k
J104
IOH
J106
AD
J108
IOL
USB-RS232
C108
100n
J105
ICSP1
MISO2
SCK2
nRESET2
MOSI2
U105
ATmega16U2-MU
R105
10k
D105
SW
PC1/RESET
J107
2X2 M-NM
J109
USB_B
VBUS
D+
D-
Shield
GND
F101
500mA
RN102
22R
D106
D107
USHIELD
FB101
BLM21
UGND
JP101
GROUND
UVCC
UCAP
C110
1u
RN103
1k
D108
RX
D109
TX
M8TXD
M8RXD
RxLED
TxLED
R107
1M
XT1
XT2
Y102
16Mhz
C112
22p
C113
22p
GNDPAD
HWB/PD7
DTR
R108
1k
USB Boot EN
C111
100n
JP102
RESET-EN
https://github.com/jvoytech/arduino_uno
Sheet: /
File: arduinouno.sch
Title: Redrawing Arduino UNO Rev3 Schematic
Size: A4
Date: 12-12-2019
Rev: 1.1
KiCad E.D.A. kicad (5.1.5)-2
Id: 1/2
Sheet: ver2
File: ver2.sch

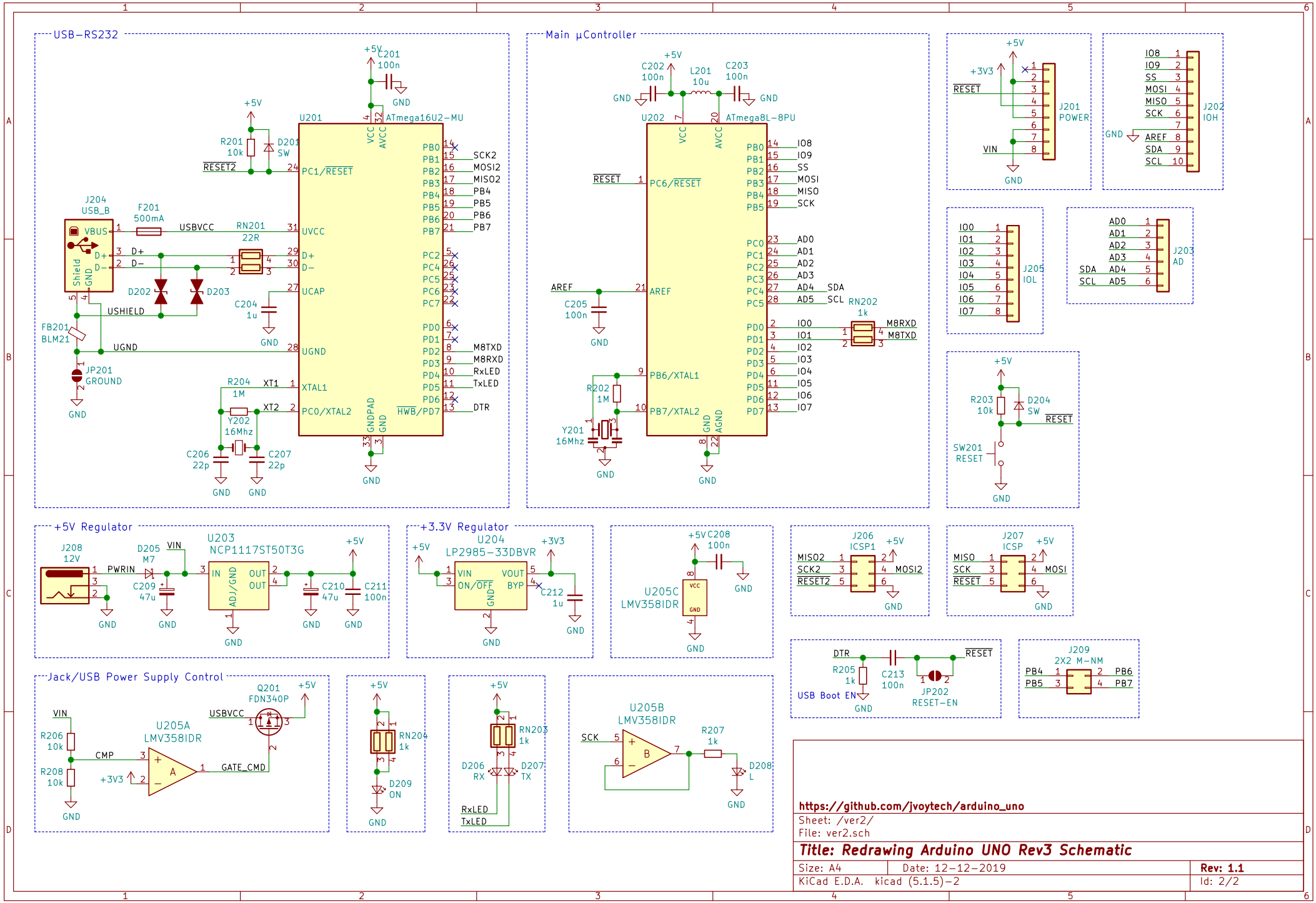
USB-RS232
Main µController
+5V Regulator
+3.3V Regulator
Jack/USB Power Supply Control
U201 ATmega16U2-MU
U202 ATmega8L-8PU
U203 NCP1117ST50T3G
U204 LP2985-33DBVR
U205A LMV358IDR
U205B LMV358IDR
U205C LMV358IDR
J204 USB_B
J201 POWER
J202 IOH
J203 AD
J205 IOL
J206 ICSP1
J207 ICSP
J208 12V
J209 2X2 M-NM
Q201 FDN340P
Y201 16Mhz
Y202 16Mhz
RESET2
USBVCC
USHIELD
UGND
PWRIN
VIN
CMP
GATE_CMD
USB Boot EN
RESET-EN
https://github.com/jvoytech/arduino_uno
Sheet: /ver2/
File: ver2.sch
Title: Redrawing Arduino UNO Rev3 Schematic
Size: A4
Date: 12-12-2019
Rev: 1.1
KiCad E.D.A. kicad (5.1.5)-2
Id: 2/2