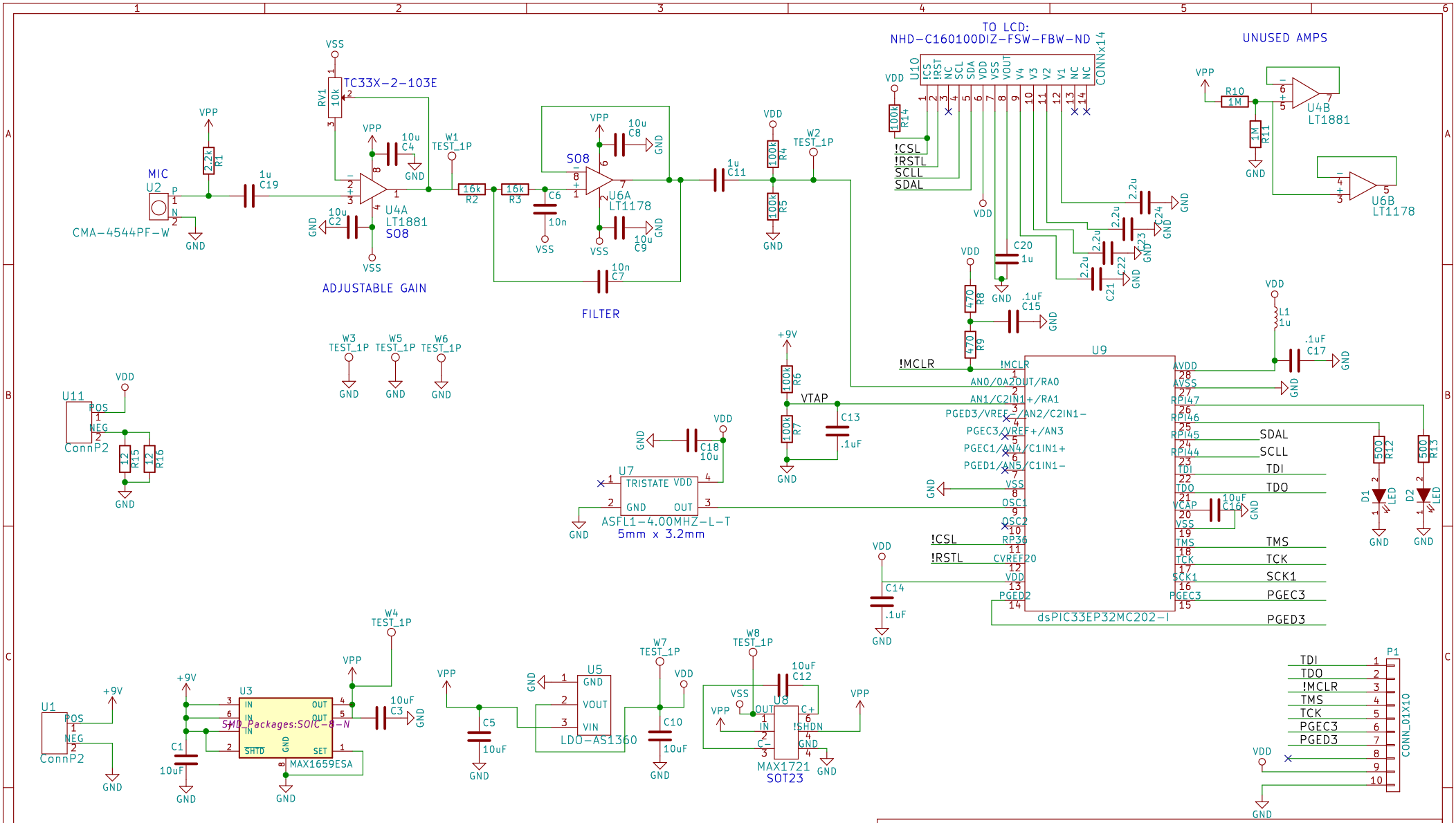

Piano Note Identifier

Sheet:1/1
File: b1.sch

Title: Piano Key Recognition Prototype Board

Size: A4	Date: 5/31/2016	**Rev:** 1.0
KiCad E.D.A. kicad 4.0.2-stable		Id: 1/1