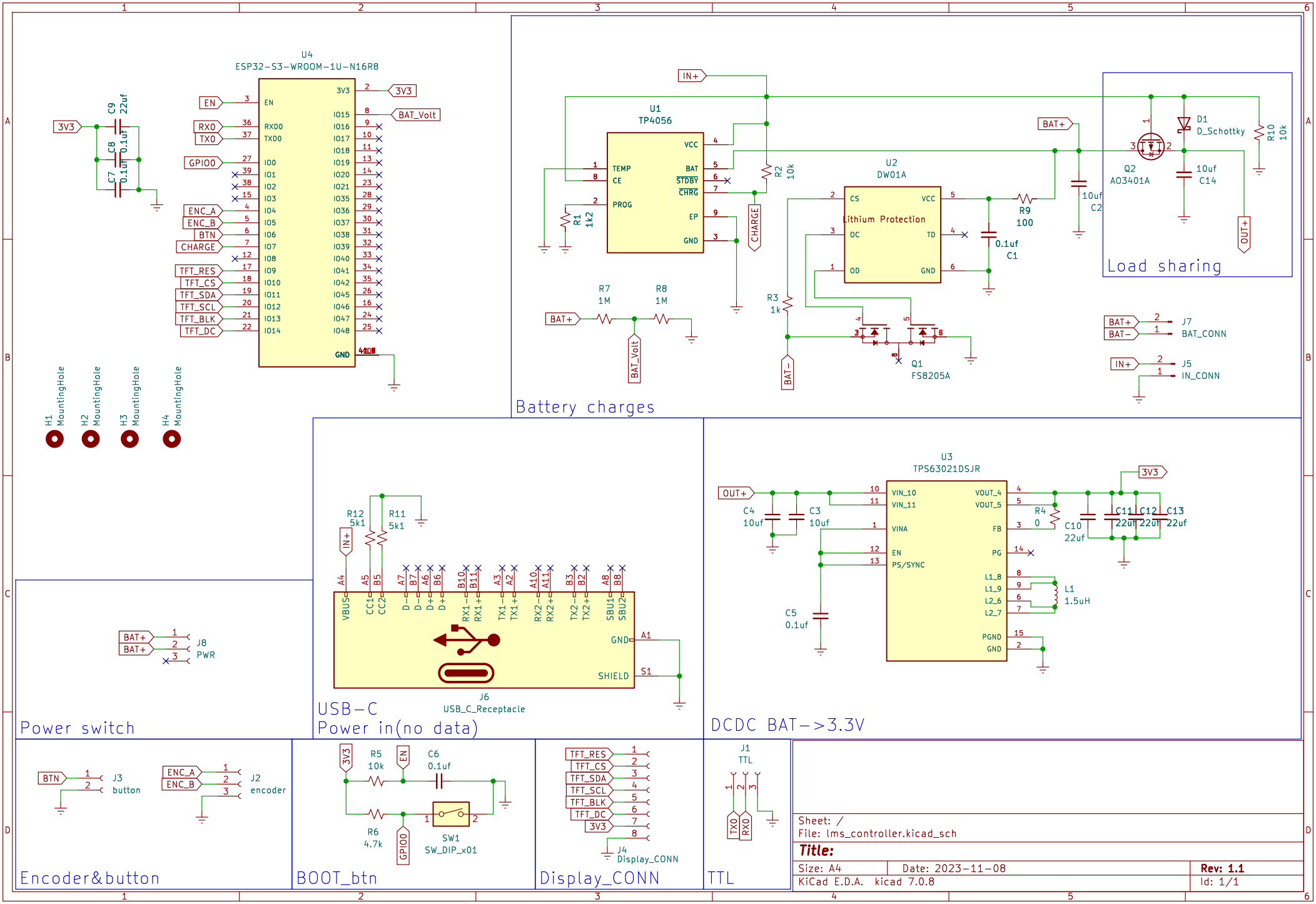
U4
ESP32-S3-WROOM-1U-N16R8
EN
RXD0
TXD0
IO0
IO1
IO2
IO3
IO4
IO5
IO6
IO7
IO8
IO9
IO10
IO11
IO12
IO13
IO14
3V3
IO15
IO16
IO17
IO18
IO19
IO20
IO21
IO35
IO36
IO37
IO38
IO39
IO40
IO41
IO42
IO45
IO46
IO47
IO48
GND
3V3
BAT_Volt
RX0
TX0
GPIO0
ENC_A
ENC_B
BTN
CHARGE
TFT_RES
TFT_CS
TFT_SDA
TFT_SCL
TFT_BLK
TFT_DC
C9 22uf
C8 0.1uf
C7 0.1uf
H1 MountingHole
H2 MountingHole
H3 MountingHole
H4 MountingHole
Battery charges
U1
TP4056
TEMP
CE
PROG
VCC
BAT
STDBY
CHRG
EP
GND
IN+
R1 1k2
R2 10k
CHARGE
R7 1M
R8 1M
BAT+
BAT_Volt
U2
DW01A
Lithium Protection
CS
OC
OD
VCC
TD
GND
R3 1k
R9 100
0.1uf C1
10uf C2
Q1 FS8205A
BAT-
Load sharing
Q2 AO3401A
D1 D_Schottky
R10 10k
10uf C14
OUT+
J7 BAT_CONN
J5 IN_CONN
Power switch
J8 PWR
USB-C
Power in(no data)
R12 5k1
R11 5k1
VBUS
CC1
CC2
D-
D+
RX1-
RX1+
TX1-
TX1+
RX2-
RX2+
TX2-
TX2+
SBU1
SBU2
GND
SHIELD
J6
USB_C_Receptacle
DCDC BAT->3.3V
U3
TPS63021DSJR
VIN_10
VIN_11
VINA
EN
PS/SYNC
VOUT_4
VOUT_5
FB
PG
L1_8
L1_9
L2_6
L2_7
PGND
GND
C4 10uf
C3 10uf
C5 0.1uf
R4 0
C10 22uf
C11 22uf
C12 22uf
C13 22uf
L1 1.5uH
Encoder&button
J3 button
J2 encoder
BOOT_btn
R5 10k
C6 0.1uf
R6 4.7k
SW1 SW_DIP_x01
Display_CONN
J4 Display_CONN
TTL
J1 TTL
TX0
RX0
Sheet: /
File: lms_controller.kicad_sch
Title:
Size: A4
Date: 2023-11-08
Rev: 1.1
KiCad E.D.A. kicad 7.0.8
Id: 1/1