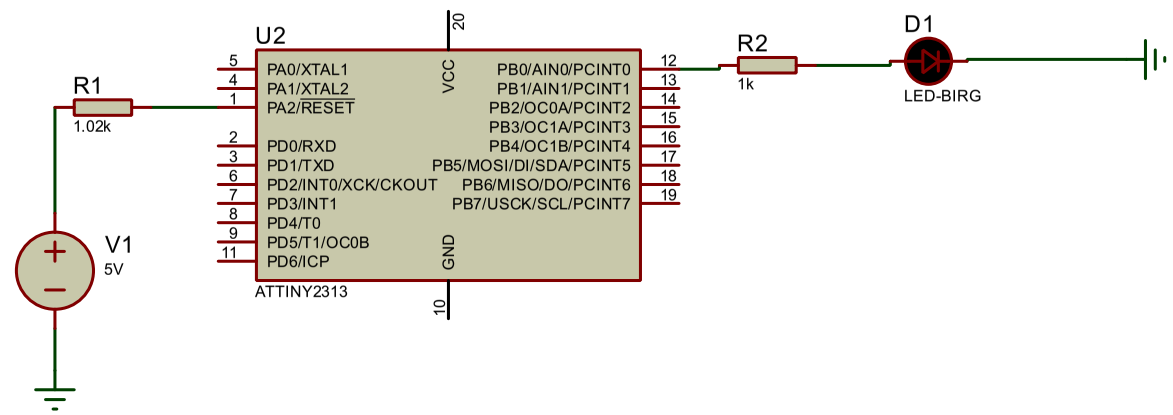

FILE NAME: Microcontroller.pdsprj	DATE: 3/6/2023
DESIGN TITLE: ATTiny2313-Assembler-LED	PAGE: 1 of 1
PATH: C:\Microcontrollers\Microcontroller.pdsprj	TIME: 9:10:19 PM
BY: José W. Escobar Escobar REV: Rev1	
BOARD: @BOARD	