Circuit Quantum Electrodynamics

Wentao Jiang

Contents

1 Introduction **1**
- 1.1 Quantum Circuits 1
- 1.2 Circuit Quantum Electrodynamics 1

2 Cavity Quantum Electrodynamics **1**
- 2.1 Dispersive Limit 2
- 2.2 Strong Dispersive Interactions 2

3 Cavity QED with Superconducting Circuits **3**
- 3.1 The Parallel LCR Oscillator 3
- 3.2 Transmission Line as Series of LC Circuits . . 3
- 3.3 Coupled LCR Resonator and Transmission Line Resonator 4
- 3.4 Intrinsic Resonator loss 4
- 3.5 Cooper Pair Box 4

1 Introduction

Requirements of a quantum computer:

1. isolated from sources of noise
2. strongly coupled to each other
3. refer to [1] for more and detailed requirements

Cavity QED system: an atom modeled as a two-level system coupled to a harmonic oscillator, whose excitations are photons.

cQED-like systems:

- alkali atoms above an optical cavity formed by two mirrors, readout by transmission of a laser through the cavity
- Rydberg atoms with 3-D microwave cavities, require cooling to ∼1K, use atoms to probe the cavity photons by selective ionization

1.1 Quantum Circuits

the only known dissipationless non-linear circuit element

High frequencies (GHz) LC circuit at low temperatures (<100mK) will have resolvable energy levels corresponding to microwave photons. However, its harmonicity makes it impossible to observe the discrete nature of these photons.

Josephson junction, cooper pair box (CPB): enhance nonlinearity

Atoms: quantum purity for 10^{14} periods, hard to tune

Artificial atoms (quantum dots, CPB): more tunable, more decoherence

1.2 Circuit Quantum Electrodynamics

Superconductive circuits $\Longleftrightarrow$ artificial atoms

Key to cQED readout: use 1-D coplanar waveguide (CPW) resonator as a cavity

Benefits:

- travel length of MW photon in CPW: 10km
- stronger coupling (10000 times larger than ordinary alkali atom, 10 times larger than Rydberg atom)
- 1-D transmission line cavity increasing the energy density by 10^6 over 3-D MW cavities, further increase dipole coupling by 1000

2 Cavity Quantum Electrodynamics

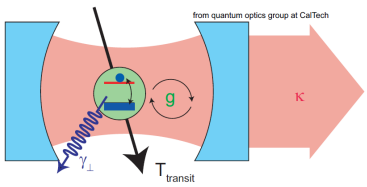

Figure 1: A two level atom interacts with the field inside of a high finesse cavity. [2]

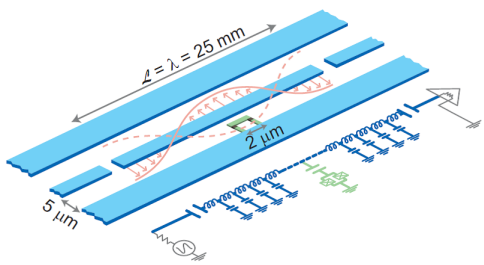

Figure 2: Schematic representation of cavity QED with superconducting circuits. [2]

Jaynes-Cummings Hamiltonian:

$$H_{\mathrm{JC}} = \hbar\omega_r(a^\dagger a + 1/2) + \hbar\frac{\omega_a}{2}\sigma_z + \hbar g(a^\dagger\sigma^- + a\sigma^+) \quad (2.1)$$

g: coupling rate

κ: photon decay rate

$Q = \omega_r/\kappa$: quality factor

$\gamma_\perp$: atom decay rate

T_{transit}: atom transit time before leaving cavity

When the atom is resonant with the cavity, the two system can freely exchange energy. When many oscillations can be completed before the atom decays, it's called the **strong coupling** limit: $g > \gamma, \kappa, 1/T_{\text{transit}}$.

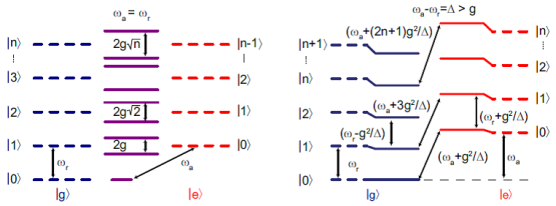

Figure 3: Energy level diagram of the J-C Hamiltonian. [2]

Eigenstates: $|\psi_\pm\rangle = (|g\rangle|n\rangle \pm |e\rangle|n-1\rangle)/\sqrt{2}$, whose energies split by $2g\sqrt{n}$, i.e., energy levels are anharmonic even for single photon in the strong coupling limit.

Because excitations are equally shared between atoms and the cavity, they decay at $\Gamma_{\text{eff}} = (\gamma_\perp + \kappa)/2$

Purcell effect(?)

2.1 Dispersive Limit

Resonant limit: $\Delta = \omega_a - \omega_r \ll g$

Dispersive limit: $\Delta \gg g$

Using perturbation to the interaction part and expand in powers of g/Δ to second order:

$$H \approx \hbar\left(\omega_r + \frac{g^2}{\Delta}\sigma_z\right)(a^\dagger a + 1/2) + \hbar\omega_a\sigma_z/2 \tag{2.2}$$

The interaction is through the dispersive shift term proportional to g^2/Δ, which commutes with the rest of the Hamiltonian, conserves both the photon number and the atom state.

Result: the effective frequency of the cavity $\omega_r' = \omega_r \pm g^2/\Delta$ depends on the state of the atom.

Rewrite the Hamiltonian to

$$H \approx \hbar(a^\dagger a + 1/2) + \frac{\hbar}{2}\left(\omega_a + \frac{2g^2}{\Delta}a^\dagger a + \frac{g^2}{\Delta}\right)\sigma_z \tag{2.3}$$

Result: the interaction gives the atom frequency a "light" shift consisting of a photon number-dependent "Stark" shift $2ng^2/\Delta$ and vacuum noise induced "Lamb" shift g^2/Δ

Accurate general solution:

$$E_{\pm,n} = \hbar\omega_r \pm \frac{\hbar}{2}\sqrt{4ng^2 + \Delta^2} \tag{2.4}$$

$$E_{g,0} = -\frac{\hbar\Delta}{2} \tag{2.5}$$

where n is the total number of excitations, **not** the number of photons and $\pm$ refer to the higher energy or lower energy state in the n excitation manifold, **not** the atom state.

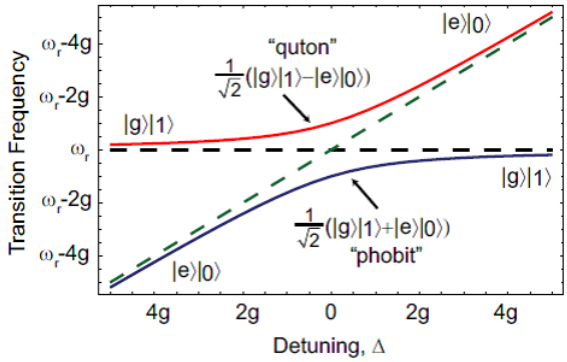

Figure 4: The avoided crossing in the transition frequency. [2]

Eigenstates:

$$|-,n\rangle = \cos\theta_n\,|g,n\rangle - \sin\theta_n\,|e,n-1\rangle \tag{2.6}$$

$$|+,n\rangle = \sin\theta_n\,|g,n\rangle + \cos\theta_n\,|e,n-1\rangle \tag{2.7}$$

$$\theta_n = \frac{1}{2}\arctan\left(\frac{2g\sqrt{n}}{\Delta}\right) \tag{2.8}$$

When dispersive limit is reached:

$$|-,n\rangle = |g,n\rangle - \frac{g\sqrt{n}}{\Delta}\,|e,n-1\rangle \tag{2.9}$$

$$|+,n\rangle = \frac{g\sqrt{n}}{\Delta}\,|g,n\rangle + |e,n-1\rangle \tag{2.10}$$

i.e., qubit states have some photon component, which can be used to create an "entanglement" bus when multiple qubits are strongly coupled to the same cavity with overlapping photonic part of their wavefunctions.

Instead of $\Gamma_{\text{eff}} = (\gamma_\perp + \kappa)/2$ as in resonant limit, the qubit has some probability to decay as a photon at a rate γ_κ, because it has a photonic aspect, and vice versa photons can be emitted by the qubit into non-radiative modes at a rate κ_γ:

$$\gamma_\kappa \approx \left(\frac{g}{\Delta}\right)^2\kappa \tag{2.11}$$

$$\kappa_\gamma \approx \left(\frac{g}{\Delta}\right)^2\gamma \tag{2.12}$$

The non-radiative ssource of decay $\gamma_\perp$ will begin to dominate before the limit set by suppressed radiative decay.

2.2 Strong Dispersive Interactions

Dispersive regime: $\Delta \gg g$

Strong dispersive regime: $\Delta \gg g$, $\chi = g^2/\Delta > \gamma, \kappa$

i.e., the qubit spectrum resolves into individual photon number peaks, Cavity shift is also larger than cavity linewidth.

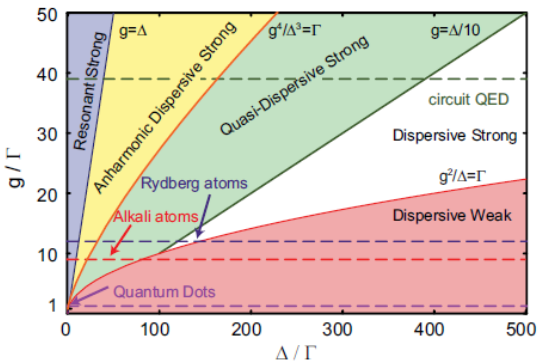

Figure 5: A phase diagram for cavity QED, described by the atom-photon coupling strength g and the detuning Δ, normalized to the rates of decay $\Gamma = \max[\gamma, \kappa, 1/T]$.[2]

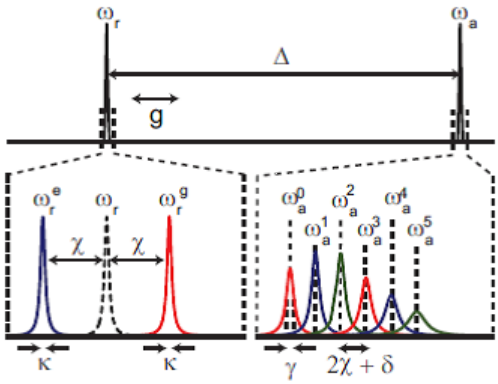

Figure 6: Spectrum of coupled cavity and atom system in strong dispersive limit. [2]

For measuring the state of a single atom using the cavity, one can use many photons to realize it for $\chi < \kappa$. For single photon precision, dispersive strong coupling is required.

If $\chi > \gamma$ is reached, the atom is shifted by more than a linewidth for each photon, making it possible to measure the exact photon number distribution. A CNOT gate can also be realized if the qubit is made only to respond when a single photon is present.

3 Cavity QED with Superconducting Circuits

3.1 The Parallel LCR Oscillator

Equation of motion:

$$\frac{d^2q}{dt^2} - \frac{1}{RC}\frac{dq}{dt} + \frac{q}{LC} = 0 \tag{3.1}$$

Solution:

$$q(t) = q_0 \exp\left[i(\omega_0 + i\frac{\kappa}{2})t + \phi\right] \tag{3.2}$$

where charge oscillation frequency $\omega_0 = 1/\sqrt{RC}$ and decay rate $\kappa = 2/RC$.

Impedance:

$$Z_{LCR}(\omega) = \left(j\omega C + \frac{1}{j\omega L} + \frac{1}{R}\right)^{-1} = \frac{R}{1 + 2jQ\delta\omega/\omega_0} \tag{3.3}$$

where the quality factor $Q = \omega_0 RC$

3.2 Transmission Line as Series of LC Circuits

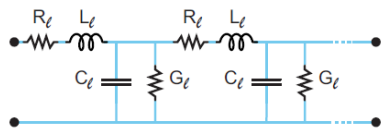

Impedance of one small section:

$$Z_0 = \sqrt{\frac{R_l + j\omega L_l}{G_l + j\omega C_l}} \tag{3.4}$$

Small loss: $Z_0 = \sqrt{L_l/C_l}$

Propagation coefficient: $\gamma = \sqrt{(R_l + j\omega L_l)(G_l + j\omega C_l)}$

$\beta = \mathrm{Im}\gamma$ describes the phase, for given frequency, it defines a phase velocity $v = \omega/\beta$

The attenuation $\alpha = \mathrm{Re}\gamma \approx R_l/Z_0 + G_l Z_0$

Effective input impedance of an arbituary load Z_l:

$$Z_{\text{in}} = Z_0 \frac{Z_L + Z_0 \tanh \gamma l}{Z_0 + Z_L \tanh \gamma l} \tag{3.5}$$

where l is the length.

For termination with high impedances (open/near open), there will be **two types of resonance**:

- high impedance resonance with $l = n\lambda/2 = \pi v/\omega_0$
- high admittance resonance with $l = (2n+1)\lambda/4$

For the first case:

$$Z_{\text{in}}^{\text{open}} = Z_0 \frac{1 + j\tan\beta l \tanh\alpha l}{\tanh\alpha l + j\tan\beta l} \tag{3.6}$$

For $\alpha \to 0$, i.e., lossless, $Z_{\text{in}}^{\text{open}} \to -j\cot\beta l$, which has poles when $\beta l \approx (n+1)\pi$, expanding for small $\delta\omega_n$:

$$\beta l = (\omega/v)(\pi v/\omega_{\lambda/2}) = \pi(n\omega_{\lambda/2} + \delta\omega_n)/\omega_{\lambda/2} \tag{3.7}$$

$$Z_{\text{in}}^{\text{open}} = \frac{Z_0/\alpha l}{1 + 2j\left(\frac{n\pi}{2\alpha l}\right)\left(\frac{\delta\omega_n}{n\omega_{\lambda/2}}\right)} \tag{3.8}$$

Comparing with eqt 3.3 gives:

$$\omega_n = n\omega_{\lambda/2} \tag{3.9}$$

$$Q_n = R_n/Z_{\text{cn}} = \frac{n\pi}{2\alpha l} \tag{3.10}$$

$$R_n = Z_0/\alpha l = R_l l \tag{3.11}$$

$$C_n = \frac{Q}{\omega_n R} = \frac{\pi}{2Z_0\omega_{\lambda/2}} = \frac{1}{2}C_l l \tag{3.12}$$

$$L_n = \frac{1}{\omega_n^2 C} = \frac{2Z_0}{\pi n^2 \omega_{\lambda/2}} = \frac{2}{n^2\pi^2}L_l l \tag{3.13}$$

$$Z_{\text{cn}} = \sqrt{L_n/C_n} = \frac{2Z_0}{n\pi} \tag{3.14}$$

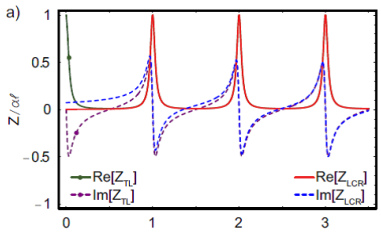

Figure 7: Real and imaginary parts of the impedance of resonator formed terminating a transmission line with an open-circuit and model of LCR resonators. [2]

3.3 Coupled LCR Resonator and Transmission Line Resonator

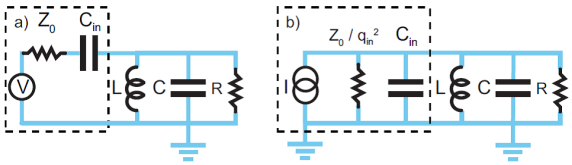

Figure 8: The capacitive coupling (a) to an environment of impedance Z0 through a capacitor. (b) The transformed input impedance seen by the oscillator. [2]

The effect of the coupling is to add an effective capacitance C_{in} and an effective parallel resistance Z_0/q_{in}^2, where $q_{\text{in}} = \omega C_{\text{in}} Z_0$

If the internal resistance is negligible:

$$Q_{\text{ext}} = \frac{1}{q_{\text{in}}} \frac{Z_0}{Z_{\text{cn}}} \approx \frac{n\pi}{2q_{\text{in}}^2} \tag{3.15}$$

If internal resistance is significant compared to the load:

$$\frac{1}{Q_L} = \frac{1}{Q_{\text{ext}}} + \frac{1}{Q_{\text{int}}} \tag{3.16}$$

In practice it is more convenient to use transmission of a two sided cavity where only the signal is present. If internal losses are negligible and $Q \gg 1$:

$$S_{21} = \frac{T_0}{1 - j\frac{\delta\omega_n}{(\kappa_{\text{in}}+\kappa_{\text{out}})/2}} \tag{3.17}$$

where

$$\kappa_{\text{in/out}} = \left(\frac{2}{\pi}\right) q_{\text{in/out}}^2 \omega_n \tag{3.18}$$

$$T_0 = \frac{\sqrt{\kappa_{\text{in}}\kappa_{\text{out}}}}{(\kappa_{\text{in}} + \kappa_{\text{out}})/2} \tag{3.19}$$

$$\omega_n = n\omega_{\lambda/2}(1 - (q_{\text{in}} + q_{\text{out}})) \tag{3.20}$$

and reflection:

$$S_{11} = \frac{\kappa_{\text{in}}}{\frac{\kappa_{\text{in}}+\kappa_{\text{in}}}{2} - j\delta\omega_n} - 1 \tag{3.21}$$

Transmission phase shift:

$$\phi = \arctan\left(\frac{\delta\omega}{\kappa/2}\right) \tag{3.22}$$

e.g., $\phi = \pm\arctan\left(2g^2/\kappa\Delta\right)$ in strong dispersive interaction[3].

3.4 Intrinsic Resonator loss

- Resistive Losses: ideally increase exponentially in T_c/T
- Dielectric Losses: $Q_{\text{diel}} = \frac{1}{\tan\delta}$, where $\tan\delta = -\epsilon_{\text{im}}/\epsilon_{\text{re}}$
- Radiative Losses: $Q_{\text{rad}} \approx 3.5\left(\frac{l}{b}\right)^2$
  For experimental parameters: $l \approx 2.5$cm, $b \approx 20\mu$m, giving $Q_{\text{rad}} \approx 5 \times 10^6$

For an approximate overall Q:

- $Q \sim 1500$ in [4]
- $Q \approx 10^4$ in [3]

3.5 Cooper Pair Box

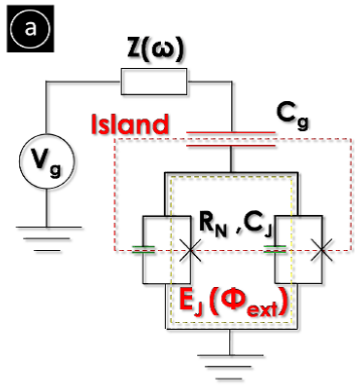

Figure 9: The circuit diagram of the single Cooper Pair Box.[6]

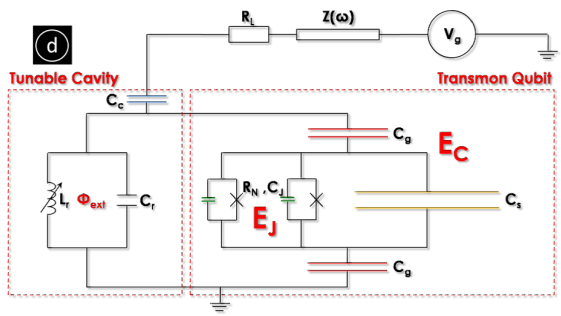

Figure 10: A transmon coupled to a tunable cavity resonator.[6]

Josephson energy: $E_J = \frac{R_Q \Delta}{2R_N}$

Coulomb energy: $E_C = \frac{e^2}{2C_\Sigma}$

where $R_Q = h/4e^2$ is the quantum state resistance, R_N is the normal state resistance, Δ is the superconducting energy gap. $C_\Sigma = C_g + C_J (+C_s$ for transmon) is the total capacitance between the island and its environment.

E_J is tunable by an external B field:

$$E_J = E_J^{\max}\left|\cos\left(\frac{\pi\Phi_{\text{ext}}}{\Phi_0}\right)\right| \tag{3.23}$$

where $\Phi_0 = h/2e$ is the flux quantum.

The Hamiltonian[1]:
in charge basis:

$$H = 4E_C \sum (\hat{n} - n_g)^2 \left|n\right\rangle \left\langle n\right| - \frac{E_J}{2} \sum [\left|n+1\right\rangle \left\langle n\right| + \left|n\right\rangle \left\langle n+1\right|] \tag{3.24}$$

in phase basis:

$$H = 4E_C (i\frac{d}{d\phi} - n_g)^2 - E_J \cos\phi \tag{3.25}$$

connected by

$$\left|\theta\right\rangle = \sum e^{i\theta n} \left|n\right\rangle \tag{3.26}$$

$$\left|n\right\rangle = \int d\theta e^{-i\theta n} \left|\theta\right\rangle \tag{3.27}$$

Energy levels:

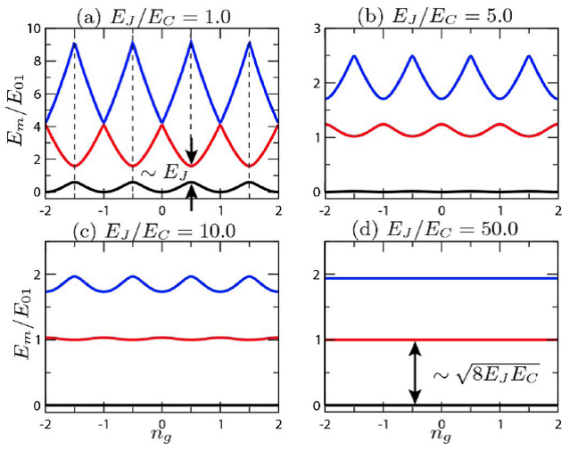

Figure 11: Eigenenergies E_m as a function of the effective offset charge n_g for different E_J/E_C ratios.[5]

Plasma frequency: $v_p = \sqrt{8E_JE_C}/h$

References

[1] David P DiVincenzo. The physical implementation of quantum computation. *arXiv preprint quant-ph/0002077*, 2000.

[2] David Isaac Schuster. *Circuit quantum electrodynamics*. Thesis, 2007.

[3] DI Schuster, Andreas Wallraff, Alexandre Blais, L Frunzio, R-S Huang, J Majer, SM Girvin, and RJ Schoelkopf. ac stark shift and dephasing of a superconducting qubit strongly coupled to a cavity field. *Physical Review Letters*, 94(12):123602, 2005.

[4] T. W. Larsen, K. D. Petersson, F. Kuemmeth, T. S. Jespersen, P. Krogstrup, J. Nygard, and C. M. Marcus. Semiconductor-nanowire-based superconducting qubit. *Phys Rev Lett*, 115(12):127001, 2015.

[5] Jens Koch, M Yu Terri, Jay Gambetta, Andrew A Houck, DI Schuster, J Majer, Alexandre Blais, Michel H Devoret, Steven M Girvin, and Robert J Schoelkopf. Charge-insensitive qubit design derived from the cooper pair box. *Physical Review A*, 76(4):042319, 2007.

[6] Philip Krantz. *Investigation of transmon qubit designs: a study of plasma frequency predictability*. Chalmers University of Technology, 2010.

[1] n_g is denoted by $n_g/2$ in old literatures ([2],[3]), here the notation follows [5] and [6].