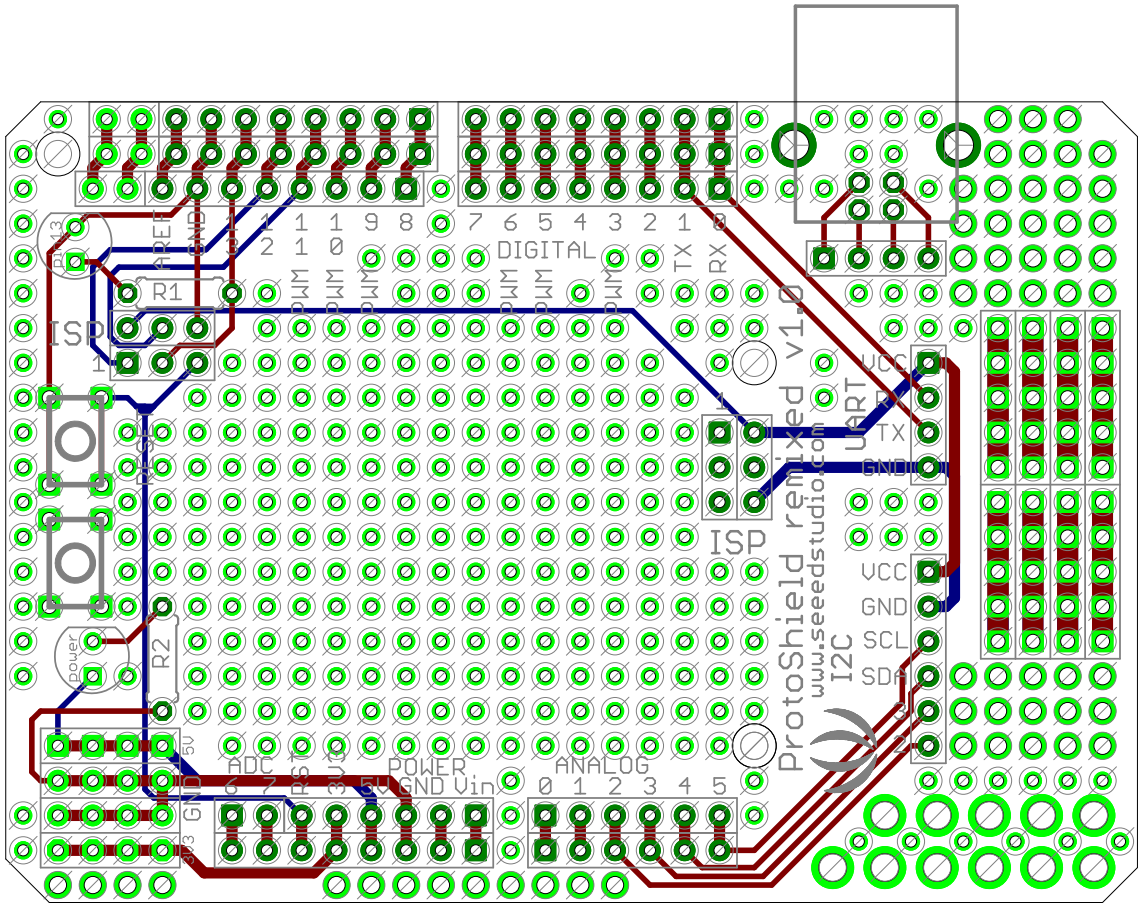

2013/4/3 13:49:54 f=1.81 E:\PC_Duino\ProtoShield\ProtoShield.brd