REV	DESCRIPTION OF CHANGE	REV BY	DATE

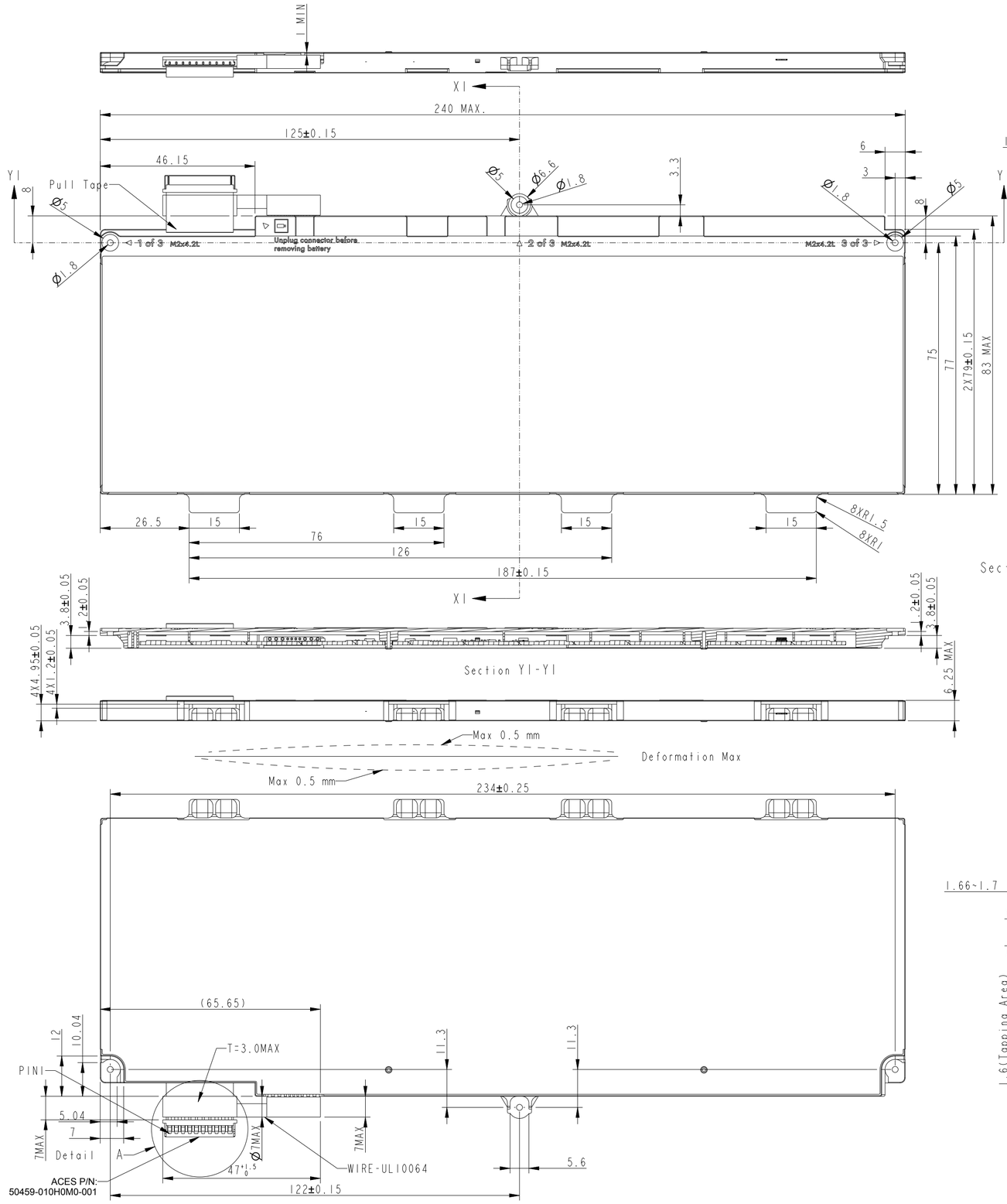

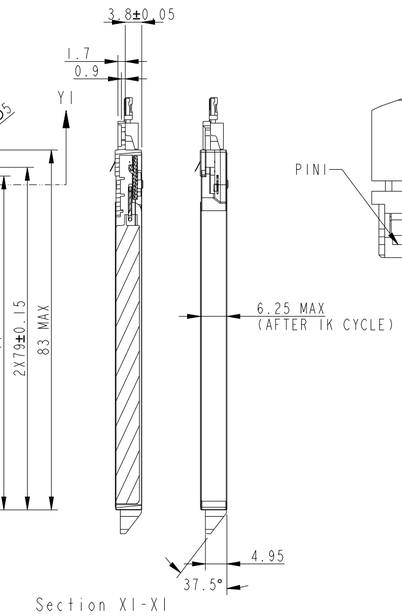

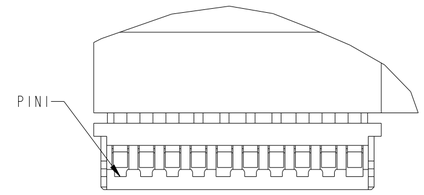

Detail A
Scale 3.000

PIN ASSIGNMENT

No.	Signal	Color	Wirw D#
1	BATT+	RED	AWG 24
2	BATT+	RED	AWG 24
3	BATT+	RED	AWG 24
4	CLK_SMB	GREEN	AWG 28
5	DAT_SMB	BLUE	AWG 28
6	BATT_PRS	WHITE	AWG 28
7	SYS_PRES	YELLOW	AWG 28
8	GND	BLACK	AWG 24
9	GND	BLACK	AWG 24
10	GND	BLACK	AWG 24

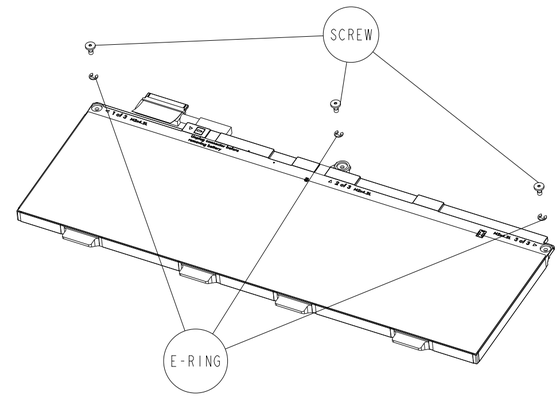

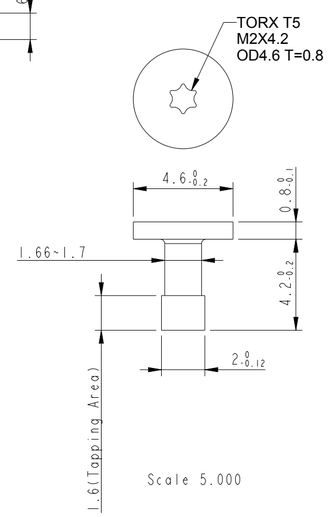

Scale 5.000

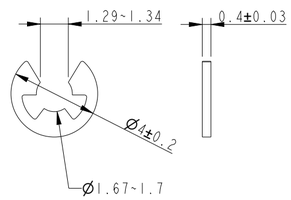

Scale 5.000

PART NUMBER	DESCRIPTION	SPECIFICATION

framework

UNLESS SPECIFIED TOLERANCE ARE:
300 ABOVE : ± 0.20
300 ≥ X ≥ 150 : ± 0.15
150 > X ≥ 50 : ± 0.10
50 > X ≥ 20 : ± 0.075
20mm BELOW : ± 0.05
ANGLES : ± 1°
FLATNESS : ▱ 0.20
CONCENTRICITY : ± 0.05

MODEL

THIRD ANGLE PROJECTION

DESIGNED BY	DRAWN BY
CHECKED BY	APPROVED BY
ISSUED DATE Feb-01-23	SCALE 1.000 / UNIT mm
DRAWING FILE NAME FW 13.5 BATTERY	
SIZE A2 / SHEET 1 OF 1	REVISION 0 / VERSION 0