Digitality-as-a-process: Co-Construction and New Media Technologies

Wang Ngai Yeung [1, 2] Tomás Dodds [3, 4]

[1]Oxford Internet Institute, Univeresity of Oxford

[2]Leiden University Humanities AI and NLP Lab

[3]Leiden University Centre for Linguistics, Leiden University

[4]Harvard Berkman Klein Center, Harvard University

November 08, 2023

Today

1. Thinking differently about digitality
2. From journalism 2.0 to immersive journalism
3. Digitality as a process: The attributes of digitality
4. Social and practical implications

Thinking differently about digitality

What is the role of digital technology in journalism and mass communication, and how can we define this concept to better prepare for future advancements?

- The concept of digitality, or encoding letters in binary code, is closely intertwined with mass communication (e.g., telegraph and teletype).
- As we move from telegraphs to computation, we see a bigger change in communication and the mediation in text.
- Turning it into what we think of today as digital media.

Journalism 2.0

- As digital technologies became more popular and presented more enormous capacities for the storage of information, these digital objects also started demanding more data from producers and consumers in exchange.
- At the same time, as digital objects become superannuated by other digital objects, a process that we may refer to as the "concrescence" of processes of data transfer ("prehensions") into unities that become new data.

Immersive journalism

- The concept of immersion, particularly within the realms of journalism and storytelling, carries with it a compelling allure, suggesting an **unmediated experience** that brings audiences closer to the heart of a narrative.
- This notion of being enveloped entirely by a story offers a sense of direct engagement and elimination of the boundaries that traditionally mediate one's experience of journalistic content.
- In this regard, audiences might feel as though they are **coming closer to the truth** or gaining an unfiltered insight into the events and stories presented.
- However, it is essential to recognise that reality remains mediated even in this deep state of immersion.

Data collection in immersive journalism

VR headsets, some of which include brainwave sensors and eye-tracking technologies, allow the collection of three distinct categories of data to create virtual worlds.
Everything becomes data points for media to better understand their users, from avatars to microtransactions to friends and interactions.

1. Physical data, such as body motion or visual attention-cueing, is collected through new generations of headsets or hand-based inputs.
2. Biometric data is collected through sensors that measure and record voluntary and involuntary bodily signals.
3. Metadata is naturally also recorded by platforms in the metaverse.

Kinetic data

User kinetic data refers to immersive technologies' ability to track **visual attention, hand movements, and body motions**, offering a granular view of users' interactions.

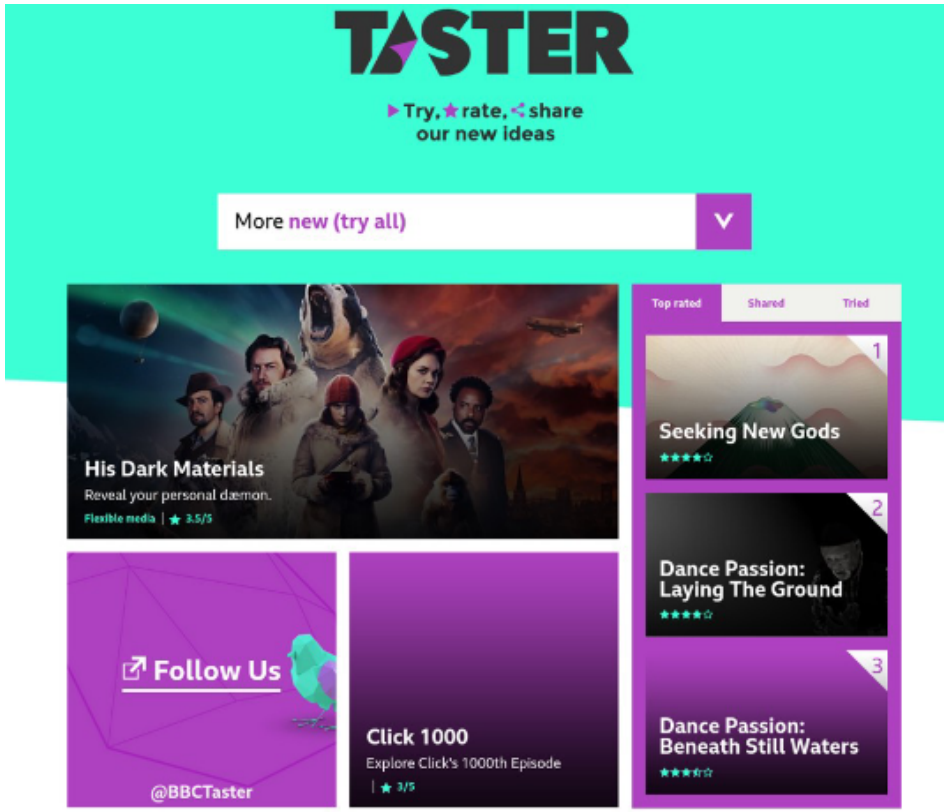

Figure: BBC Taster main page. (Screenshot by the authors)

Virtual world data

Virtual world data refer to data points that include **avatars, virtual spaces, interactions, and digital twinning**

Figure: The user interface of Gone Gitmo in Second Life. (Goulding, 2020)

User response data

User response data refers to the **demographics, attitudes, emotions, presence, and experience satisfaction**, either self-reported or collected by immersive technologies hardware.

Figure: Fixation metrics demonstration. (Tobii, n.d.)

Digitality as a process: A Whiteheadian Perspective

- **The becoming of digitality:** "Procedural integration ... of processes of data transfer into unities that become new data" (Seibt, 2022)
- **Entity as time-space variants:** Entities are about how one becomes over time and space , not what one does and what one is

Attributes of digitality

1. Cumulativity
2. Porousity
3. Communicativity

Cumulativity of digitality

- Digitality is cumulative through innovation
- Digitality is always additive through $n + 1$ layer of functionality
- Digitality is a process where newer functionalities superannuate older functionalities

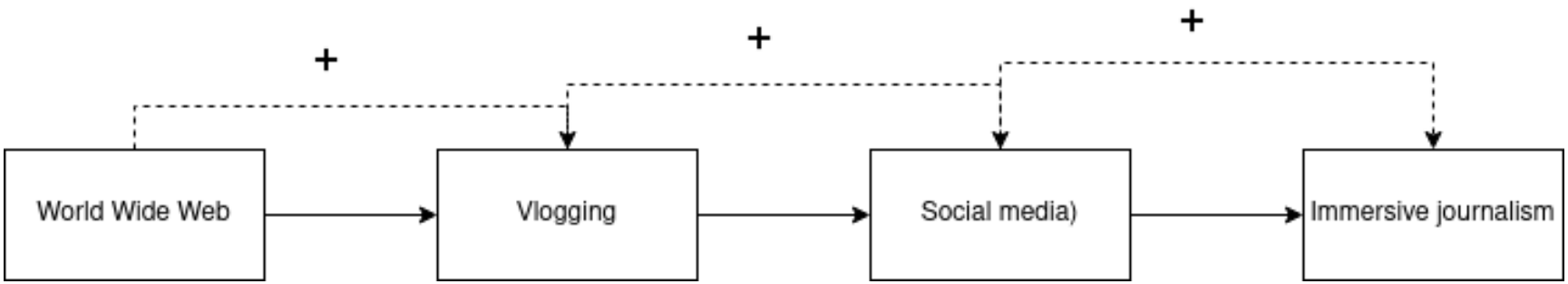

Figure: Functional cumulativity

Porousity of digitality

- Digitality is a process where expansion of boundaries is more prominent than marginalization
- **Porousity:** The boundaries are rather loose and flexible

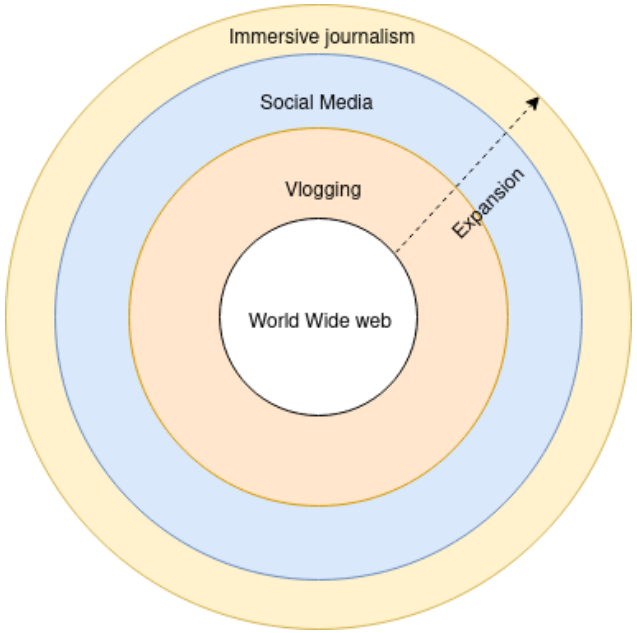

Figure: Boundary expansion

Communicativity of digitality

- **Communication as data exchange and storage:** Digitality is a cumulative process where more exchange and storage of data is involved through the expansion of boundaries
- **Materiality and digitality:** Newer digital objects are more *communicative* due to new infrastructure
- **Artificial communication:** Machine learning algorithms as communicative actors and perform on virtual contingency (Esposito, 2023)

Communicativity of digitality

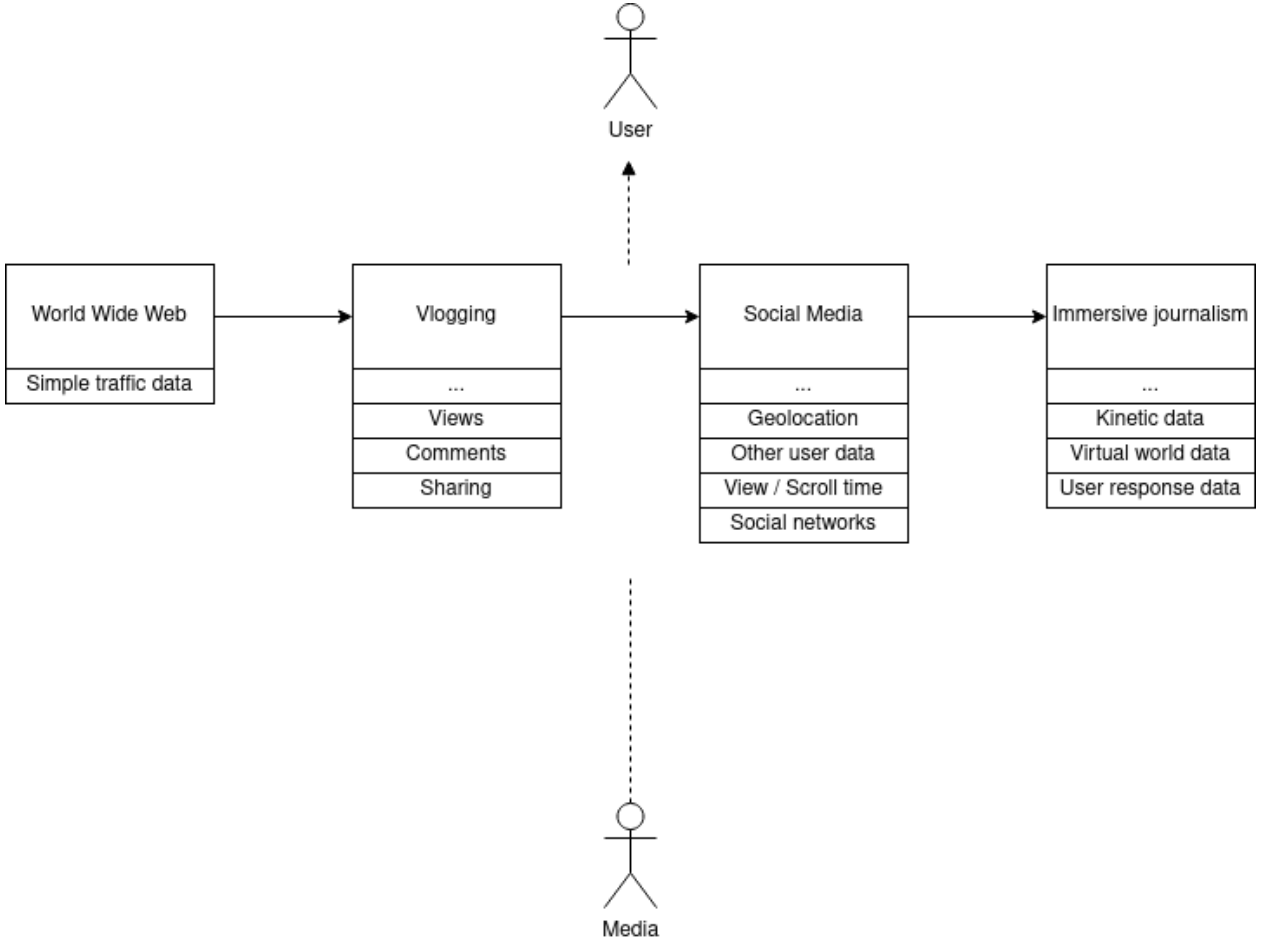

Figure: Cumulation of data communication and storage

Digitality is anticipatory

- Digital is always moving - the best bet is to keep up to date with the latest technical advancements in the fields
- It is inherently difficult to define digitality, and therefore, very difficult to regulate the digital world (what's new today will be obsolete tomorrow)
- Regulation is always responsive to digital changes; think about photoshopping, AI-generated photos

What about digital journalism?

- **Intersectionalized and localized data:** Changing conceptualization of informed consent in the digital world (Markham, 2012)
- **Ethics of care:** Journalism can embrace its immersive future without compromising its foundational principles by prioritising user rights, transparency, and ethical storytelling (Mathewson, 2021)
- **Power asymmetry:** The more digital journalism is, the more data are communicated through and stored in third-party platforms (Dodds & Yeung, forthcoming); loss of oversight.

Towards a flexible framework of digitality in media studies

- **Acknowledging taken-for-grantedness:** Allow us to look at digital media from a more socio-historical, co-constructive perspective
- **Perpetual incompleteness:** Our knowledge about digitality is always incomplete - try to look at what makes some behaviours and tools more *communicative, cumulative and porous* instead of what makes our behaviours and tools *more digital than before*

Participation in this conference has been sponsored by the Leiden University Fund / LUF