Experiment 2

Aim :

The objective of this experiment is to design and simulate a 4-bit Ripple Carry Adder (RCA) using basic logic gates in Logisim Evolution and to analyze the propagation delay associated with carry generation and output computation. The experiment aims to understand how carry propagates through multiple full adders and how it affects the overall speed of the circuit.

Procedure :

In this experiment, a 4-bit Ripple Carry Adder was implemented using basic logic gates such as AND, OR, and XOR. Each stage of the circuit represents a full adder, where two input bits and a carry input are processed to generate a sum and carry output. The carry output of each stage is connected to the next stage, forming a chain-like structure.

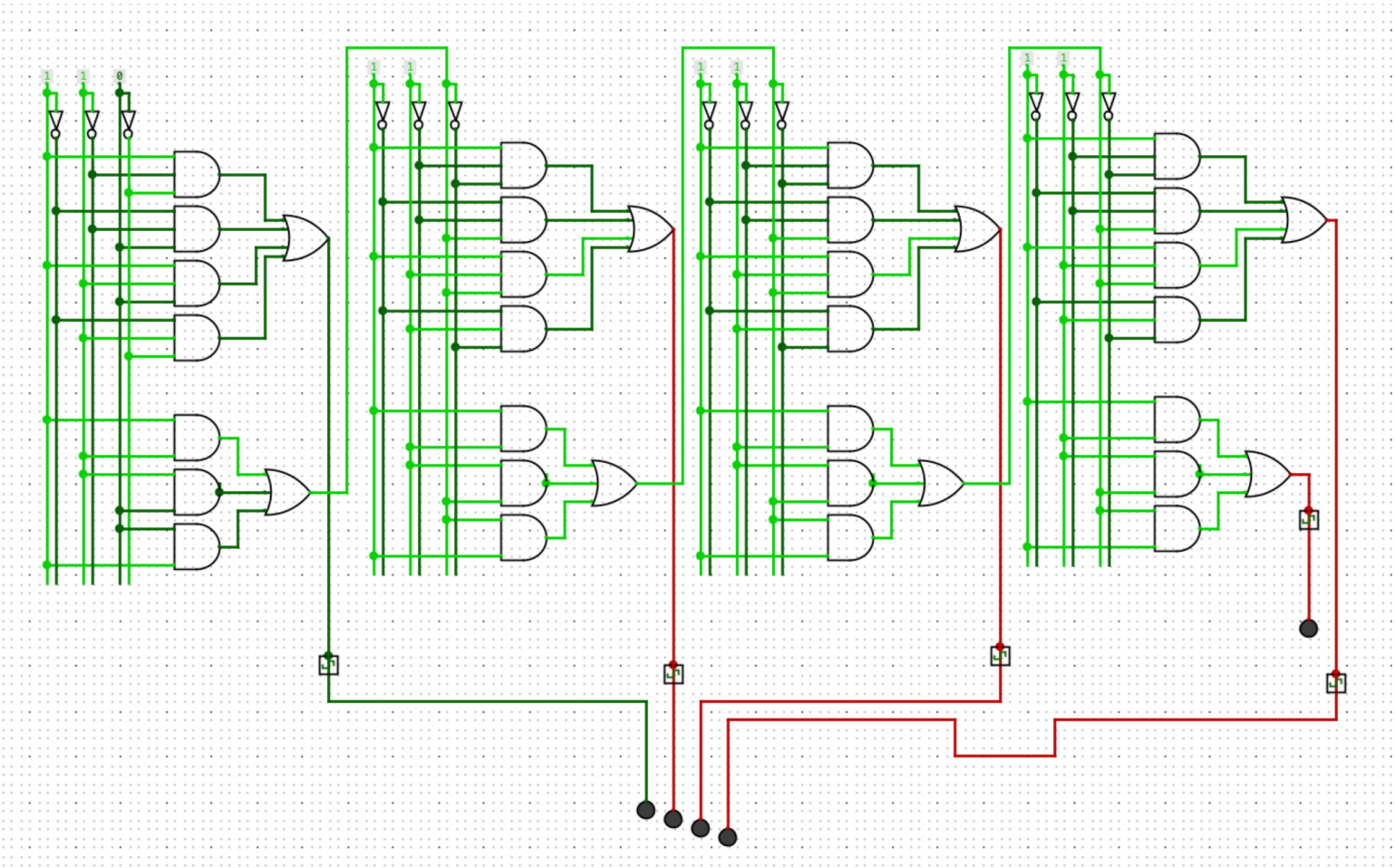

Lab Implementation (Logisim)

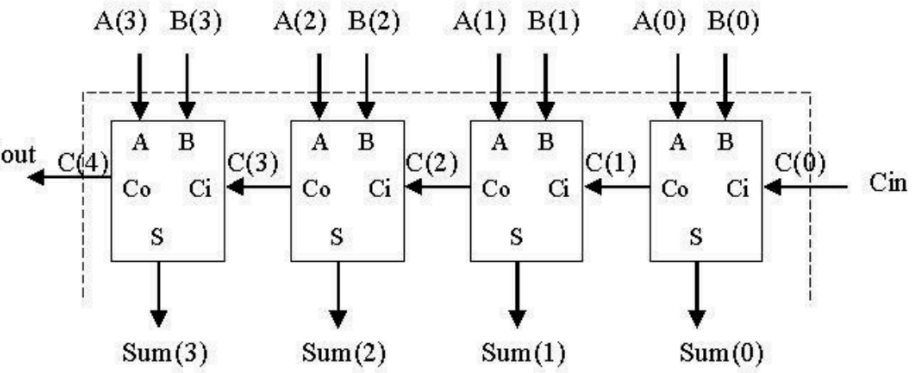

Simplified form of circuit

The Boolean equations of a full adder are given by:

S_{out} = ABC + AB'C' + A'B'C + BA'C'
=(AB'+BA')C +AB+A'B') C'
S_{out} = A ⊕ B ⊕ C
C_{out} = AB + AC + BC
C_{out} = AB + C (A ⊕ B)

A	B	C	Sum	Carry
1	1	1	1	1
1	1	0	0	1
1	0	1	0	1
1	0	0	1	0
0	1	1	0	1
0	1	0	1	0
0	0	1	1	0
0	0	0	0	0

Truth table of Full Adder

Results :

The simulation showed that the sum outputs were generated correctly for all input combinations. However, it was observed that the carry signal propagates sequentially from one stage to another, introducing a delay in the final output. The delay increases with the number of bits, as each stage must wait for the carry from the previous stage before producing its result.In a 4-bit RCA, the worst-case delay occurs when the carry must propagate through all four stages. This delay makes the circuit slower compared to more advanced adders like carry look-ahead adders