Contents

Model Name : PWR ONOFF test board

01: Contents

02: Power Blocks

03: Display and SD Card

04: Option

05: Holes

PWR ONOFF	PWR ONOFF	HUMAX EASY DIGITAL
Title	Contents	
Size	Document Number <Doc>	Rev 0.1
Date: Tuesday, May 12, 2015	Sheet 1 of 5	

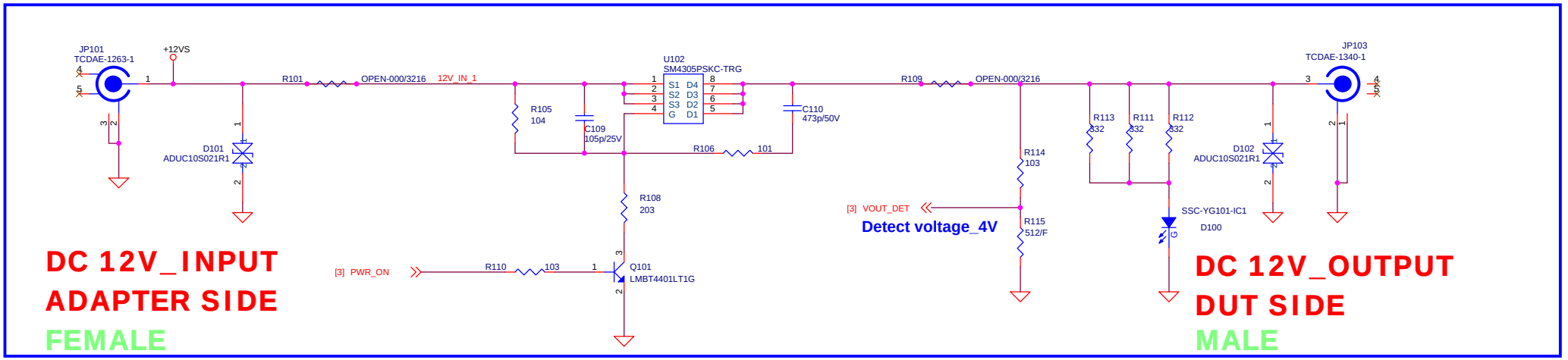
JP101
TCDAE-1263-1
+12VS
R101
OPEN-000/3216
12V_IN_1
U102
SM4305PSKC-TRG
S1 D4
S2 D3
S3 D2
G D1
R105
104
C109
105p/25V
C110
473p/50V
R106
101
R108
203
D101
ADUC10S021R1
R109
OPEN-000/3216
R114
103
R115
512/F
[3] VOUT_DET
Detect voltage_4V
R113
332
R111
332
R112
332
SSC-YG101-IC1
D100
D102
ADUC10S021R1
JP103
TCDAE-1340-1
[3] PWR_ON
R110
103
Q101
LMBT4401LT1G
DC 12V_INPUT
ADAPTER SIDE
FEMALE
DC 12V_OUTPUT
DUT SIDE
MALE

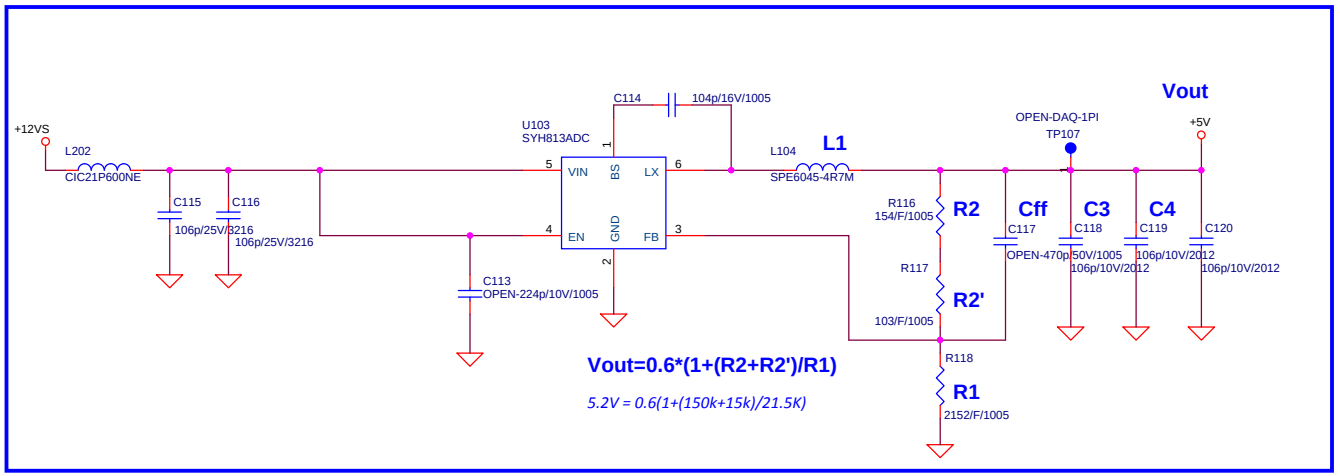
+12VS
L202
CIC21P600NE
C115
106p/25V/3216
C116
106p/25V/3216
C113
OPEN-224p/10V/1005
U103
SYH813ADC
VIN
BS
LX
EN
GND
FB
C114
104p/16V/1005
L104
L1
SPE6045-4R7M
Vout
OPEN-DAQ-1PI
TP107
+5V
R116
154/F/1005
R2
Cff
C3
C4
C117
C118
C119
C120
OPEN-470p/50V/1005
106p/10V/2012
106p/10V/2012
106p/10V/2012
R117
R2'
103/F/1005
R118
R1
2152/F/1005
Vout=0.6*(1+(R2+R2')/R1)
5.2V = 0.6(1+(150k+15k)/21.5K)

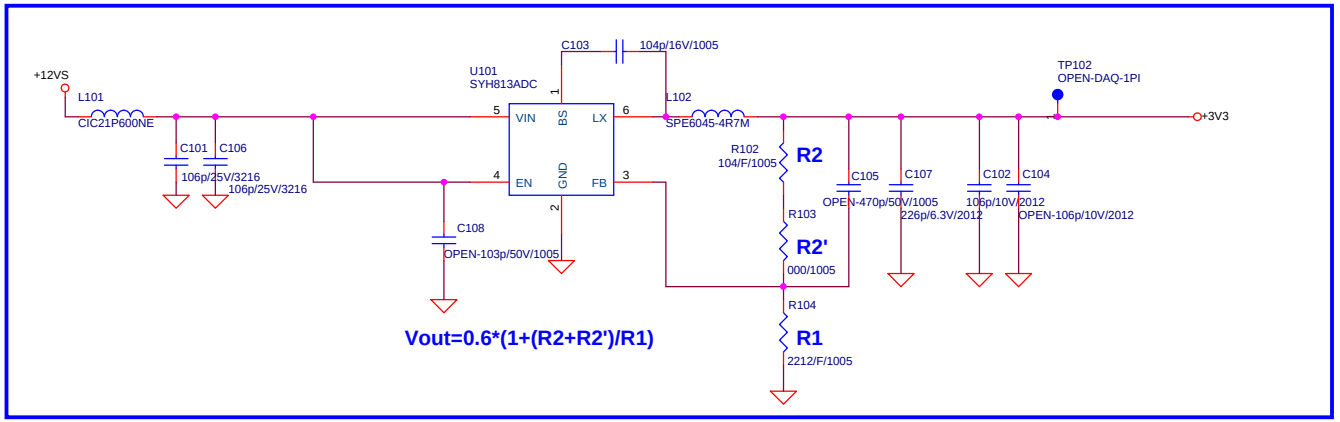
+12VS
L101
CIC21P600NE
C101
106p/25V/3216
C106
106p/25V/3216
C108
OPEN-103p/50V/1005
U101
SYH813ADC
VIN
BS
LX
EN
GND
FB
C103
104p/16V/1005
L102
SPE6045-4R7M
TP102
OPEN-DAQ-1PI
+3V3
R102
104/F/1005
R2
R103
R2'
000/1005
R104
R1
2212/F/1005
C105
OPEN-470p/50V/1005
C107
226p/6.3V/2012
C102
106p/10V/2012
C104
OPEN-106p/10V/2012
Vout=0.6*(1+(R2+R2')/R1)

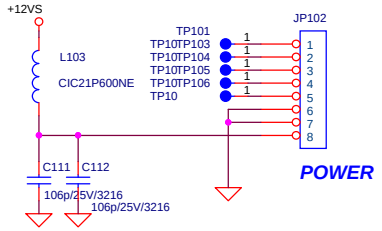
+12VS
L103
CIC21P600NE
C111
106p/25V/3216
C112
106p/25V/3216
TP101
TP10TP103
TP10TP104
TP10TP105
TP10TP106
TP10
JP102
POWER

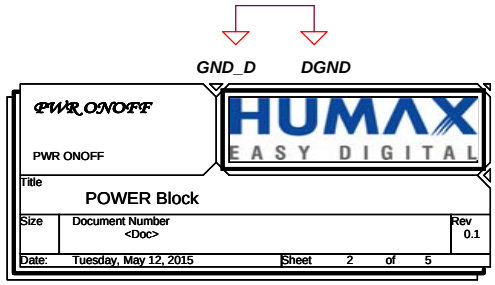
GND_D
DGND
PWR ONOFF
PWR ONOFF
HUMAX
EASY DIGITAL
Title
POWER Block
Size
Document Number
<Doc>
Rev
0.1
Date:
Tuesday, May 12, 2015
Sheet
2
of
5

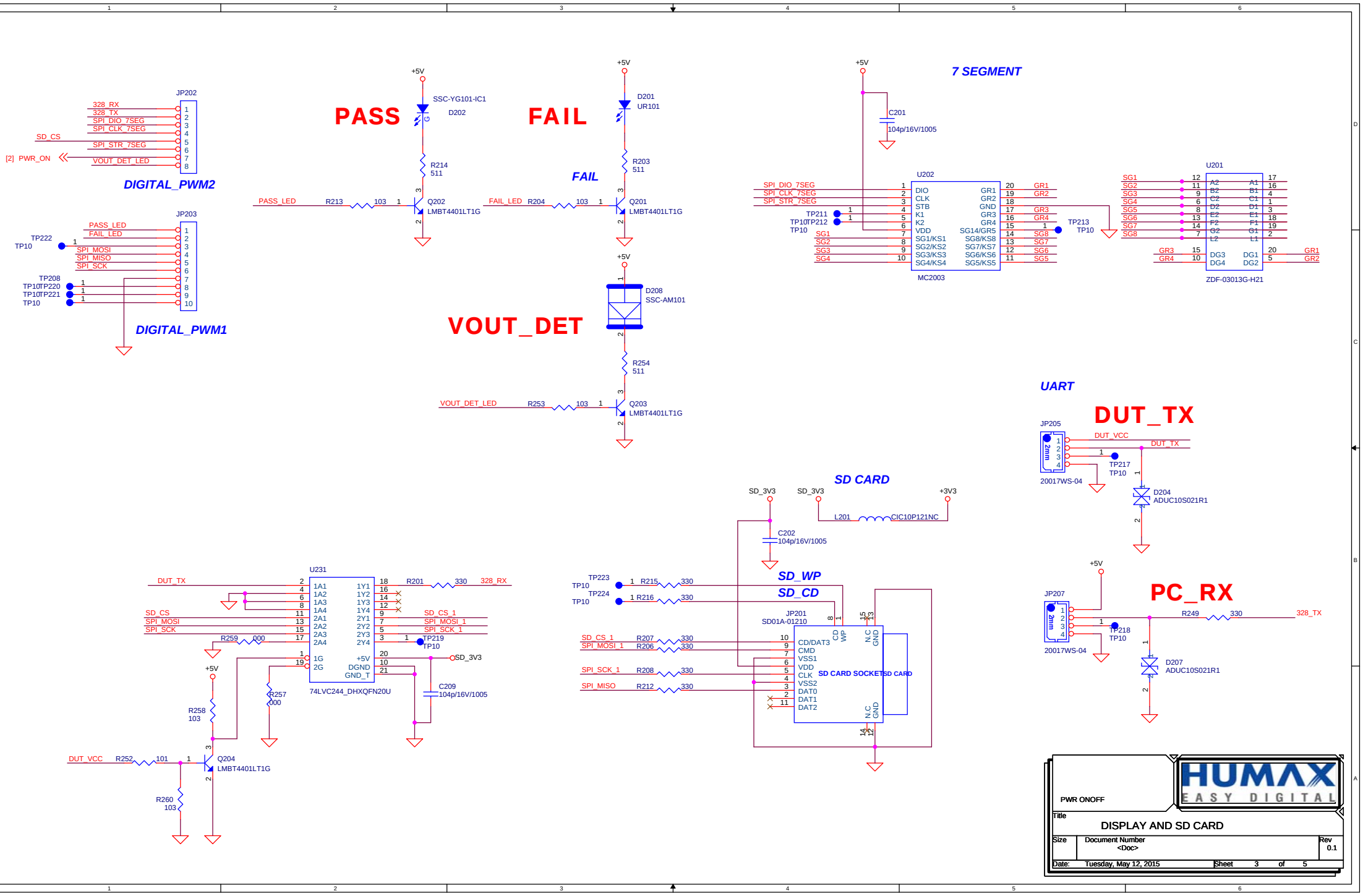

PASS
FAIL
VOUT_DET
7 SEGMENT
DIGITAL_PWM2
DIGITAL_PWM1
UART
DUT_TX
PC_RX
SD CARD
SD_WP
SD_CD
JP202
JP203
JP201
JP205
JP207
U201
U202
U231
MC2003
ZDF-03013G-H21
74LVC244_DHXQFN20U
SD01A-01210
SD CARD SOCKET
SD CARD
20017WS-04
SSC-YG101-IC1
D202
D201
UR101
D208
SSC-AM101
D204
ADUC10S021R1
D207
ADUC10S021R1
C201
104p/16V/1005
C202
104p/16V/1005
C209
104p/16V/1005
L201
CIC10P121NC
Q202
LMBT4401LT1G
Q201
LMBT4401LT1G
Q203
LMBT4401LT1G
Q204
LMBT4401LT1G
R214
511
R203
511
R254
511
R213
103
R204
103
R253
103
R201
330
R215
330
R216
330
R207
330
R206
330
R208
330
R212
330
R259
000
R257
000
R258
103
R260
103
R252
101
R249
330
328_RX
328_TX
SD_CS
SPI_DIO_7SEG
SPI_CLK_7SEG
SPI_STR_7SEG
[2] PWR_ON
VOUT_DET_LED
PASS_LED
FAIL_LED
SPI_MOSI
SPI_MISO
SPI_SCK
DUT_TX
DUT_VCC
SD_CS_1
SPI_MOSI_1
SPI_SCK_1
SPI_MISO
SD_3V3
+5V
+3V3
TP222
TP208
TP10
TP211
TP212
TP213
TP217
TP218
TP219
TP223
TP224
PWR ONOFF
HUMAX
EASY DIGITAL
Title
DISPLAY AND SD CARD
Size
Document Number
<Doc>
Rev
0.1
Date: Tuesday, May 12, 2015
Sheet 3 of 5

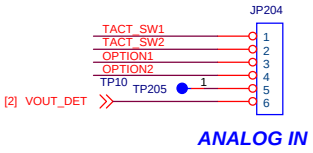

ANALOG IN

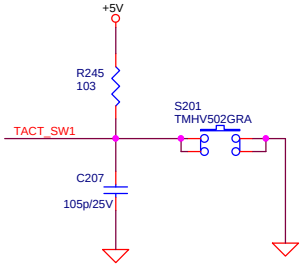

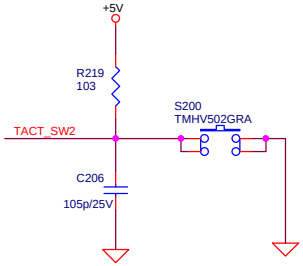

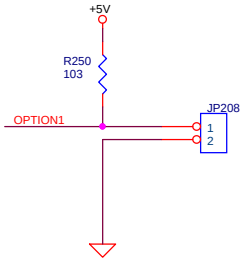

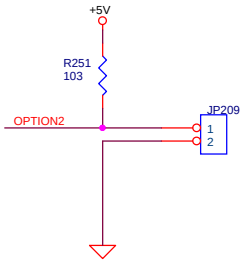

PWR ONOFF		
Title: OPTION		
Size	Document Number <Doc>	Rev 0.1
Date: Tuesday, May 12, 2015	Sheet 4 of 5	

SCREW HOLE

FIDUCIAL MARK (ROUND)

FIDUCIAL MARK (SQUARE)

Break-out Taps

NON-THROUGH HOLE

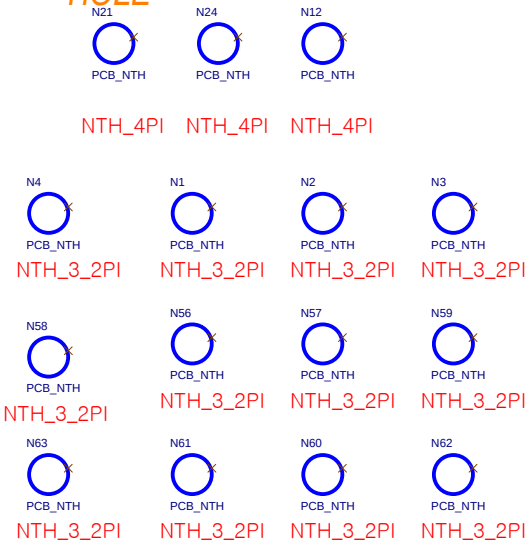

PWR ONOFF		HUMAX EASY DIGITAL
PWR ONOFF		
Title: Holes		
Size	Document Number <Doc>	Rev 0.1
Date: Tuesday, May 12, 2015	Sheet 5 of 5	