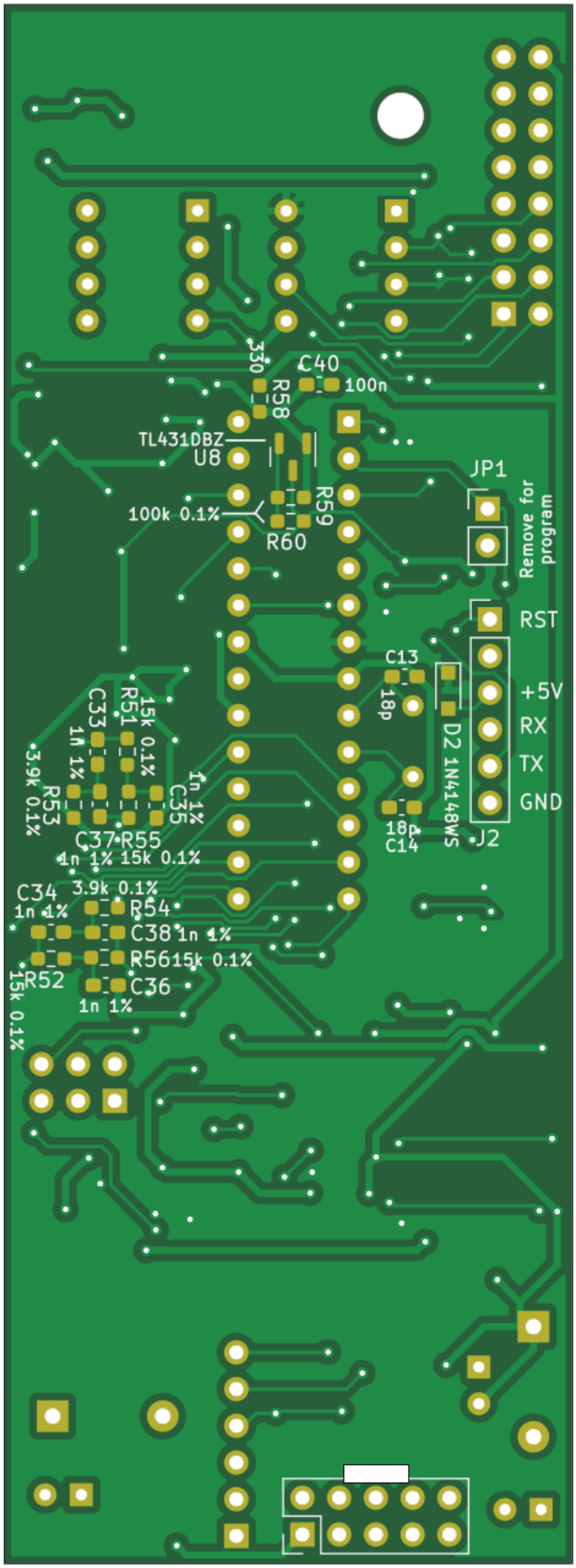
TL431DBZ
U8
100k 0.1%
R60
R59
R58
330
C40
100n
JP1
Remove for program
RST
+5V
RX
TX
GND
J2
C13
18p
C14
18p
D2 1N4148WS
C33
1n 1%
R51
15k 0.1%
R53
3.9k 0.1%
C35
1u 1%
C37
1n 1%
R55
15k 0.1%
C34
1n 1%
3.9k 0.1%
R54
C38
1n 1%
R56
15k 0.1%
R52
15k 0.1%
C36
1n 1%

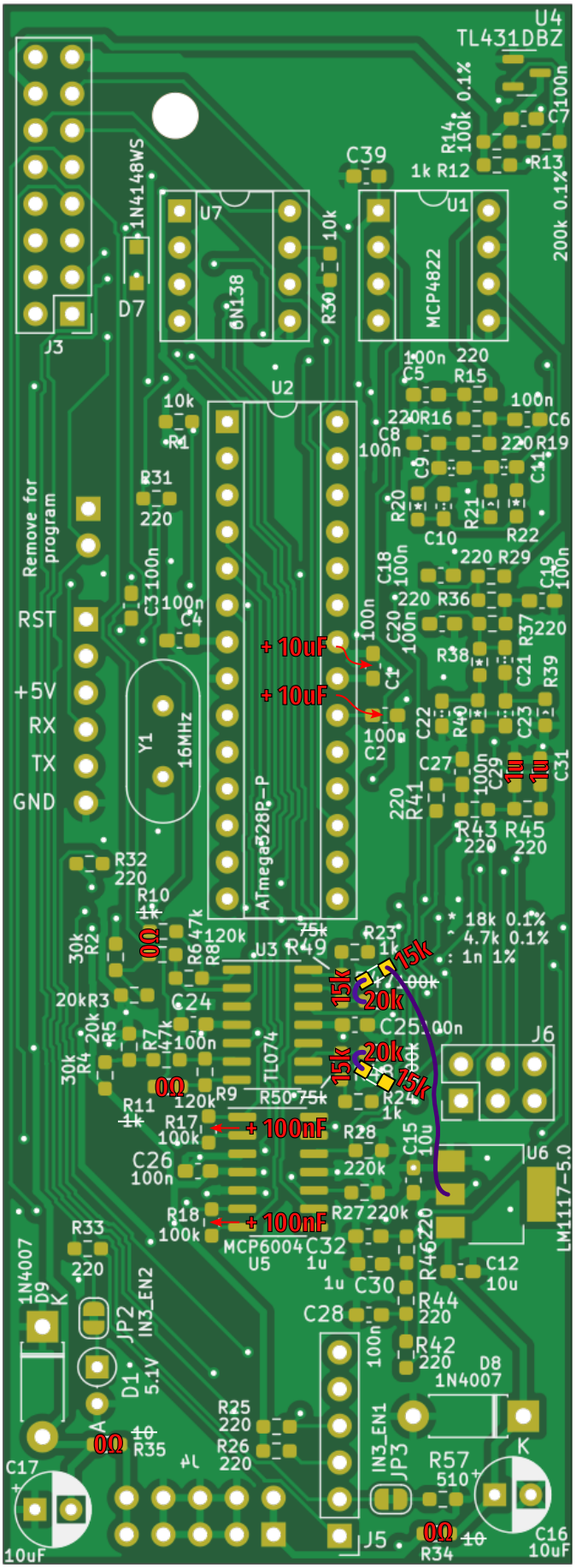
U4
TL431DBZ
C7
100n
R14
100k 0.1%
R13
200k 0.1%
C39
1k R12
U1
MCP4822
1N4148WS
D7
U7
6N138
10k
R30
J3
U2
ATmega328P-P
Y1
16MHz
Remove for program
RST
+5V
RX
TX
GND
+ 10uF
+ 10uF
C5
100n
R15
220
R16
220
C6
100n
R19
220
C8
100n
C9
C10
R20
R21
R22
220
R29
220
R36
C18
100n
C19
100n
C20
100n
R37
220
R38
R39
C21
C22
R40
C23
C27
100n
C29
1u
C31
1u
R41
220
R43
220
R45
220
R31
220
C3
100n
C4
100n
C1
100n
C2
R32
220
R10
1k
0Ω
R6
47k
R8
120k
U3
R49
75k
R23
1k
15k
20k
15k
20k
15k
75k
R2
30k
R3
20k
R5
20k
R7
47k
C24
100n
TL074
C25
100n
J6
R4
30k
R11
1k
R9
120k
R50
75k
R24
1k
R17
100k
+ 100nF
R28
220k
C15
10u
C26
100n
U6
LM1117-5.0
R18
100k
+ 100nF
R27
220k
R46
220
MCP6004
U5
C32
1u
C30
1u
C12
10u
R33
220
R44
220
C28
100n
R42
220
D8
1N4007
D9
1N4007
JP2
IN3_EN2
D1
5.1V
R25
220
R26
220
0Ω
R35
10
IN3_EN1
JP3
R57
510
C17
10uF
J5
0Ω
R34
10
C16
10uF

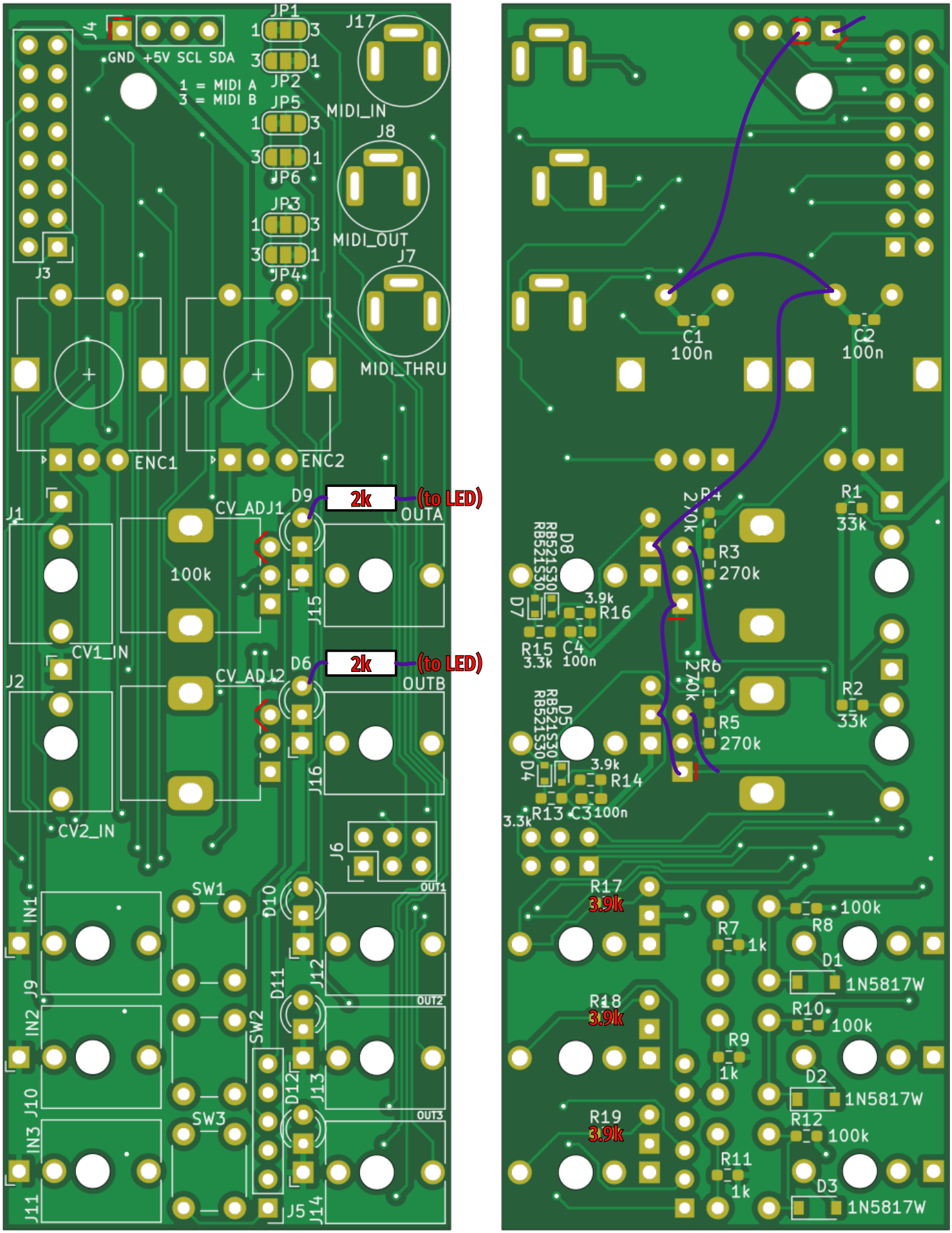
J4
GND +5V SCL SDA
JP1
JP2
JP5
JP6
JP3
JP4
1 = MIDI A
3 = MIDI B
J17
MIDI_IN
J8
MIDI_OUT
J7
MIDI_THRU
J3
ENC1
ENC2
J1
CV_ADJ1
D9
2k
(to LED)
OUTA
100k
J15
CV1_IN
J2
CV_ADJ2
D6
2k
(to LED)
OUTB
J16
CV2_IN
J6
OUT1
IN1
J9
SW1
D10
J12
OUT2
IN2
J10
D11
SW2
D12
J13
OUT3
IN3
J11
SW3
J5
J14
C1
100n
C2
100n
R4
270k
R1
33k
D8
RB521S30
R3
270k
3.9k
R16
D7
R15
3.3k
C4
100n
R6
270k
R2
33k
D5
RB521S30
R5
270k
3.9k
R14
D4
R13
3.3k
C3
100n
R17
3.9k
R7
1k
R8
100k
D1
1N5817W
R18
3.9k
R10
100k
R9
1k
D2
1N5817W
R19
3.9k
R12
100k
R11
1k
D3
1N5817W