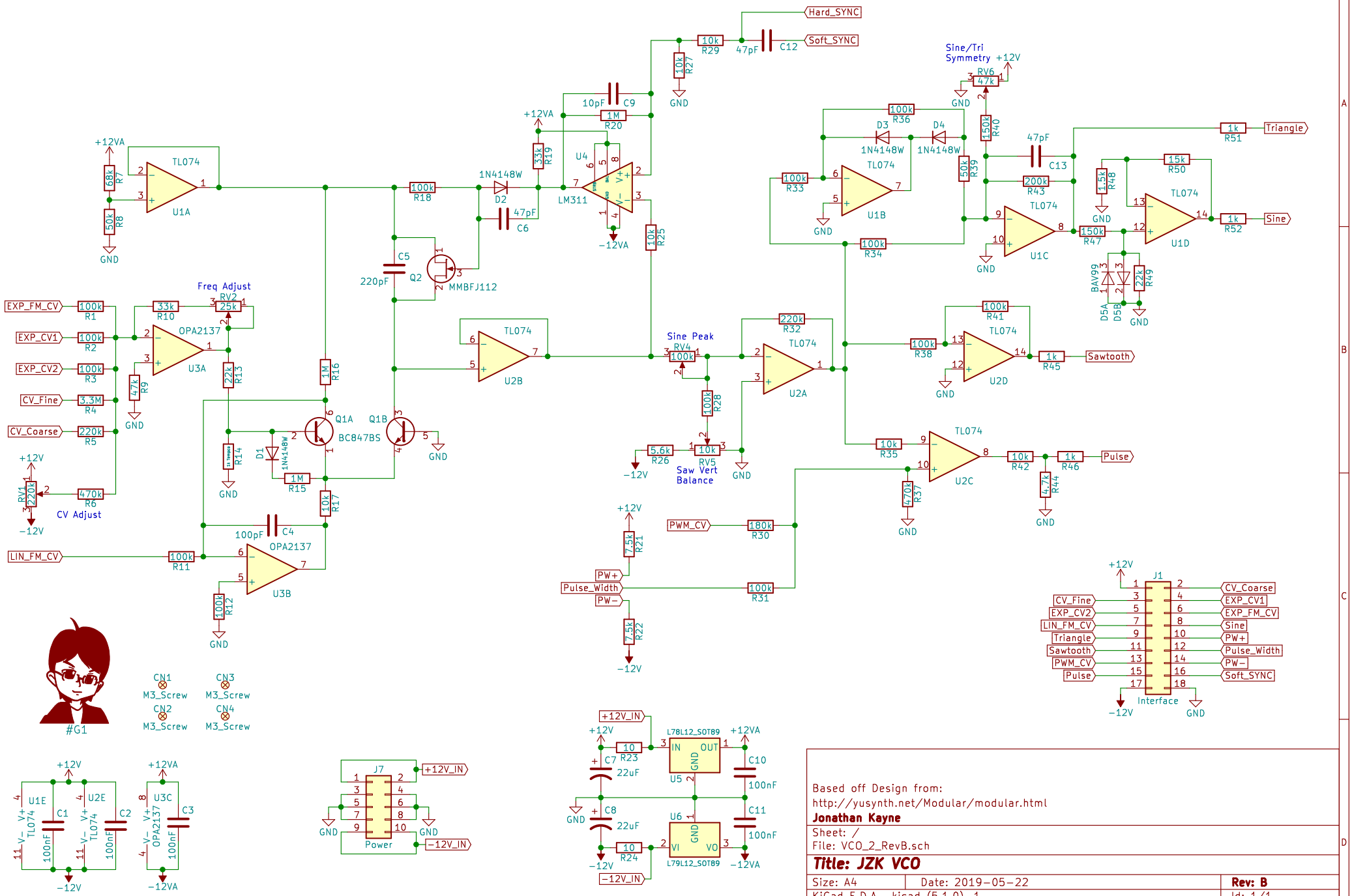
Hard_SYNC
Soft_SYNC
Sine/Tri Symmetry
Freq Adjust
Sine Peak
Saw Vert Balance
CV Adjust
Triangle
Sine
Sawtooth
Pulse
EXP_FM_CV
EXP_CV1
EXP_CV2
CV_Fine
CV_Coarse
LIN_FM_CV
PWM_CV
PW+
Pulse_Width
PW−
Interface
Power
+12V_IN
−12V_IN
#G1
Based off Design from:
http://yusynth.net/Modular/modular.html
Jonathan Kayne
Sheet: /
File: VCO_2_RevB.sch
Title: JZK VCO
Size: A4
Date: 2019-05-22
Rev: B
KiCad E.D.A. kicad (5.1.0)-1
Id: 1/1