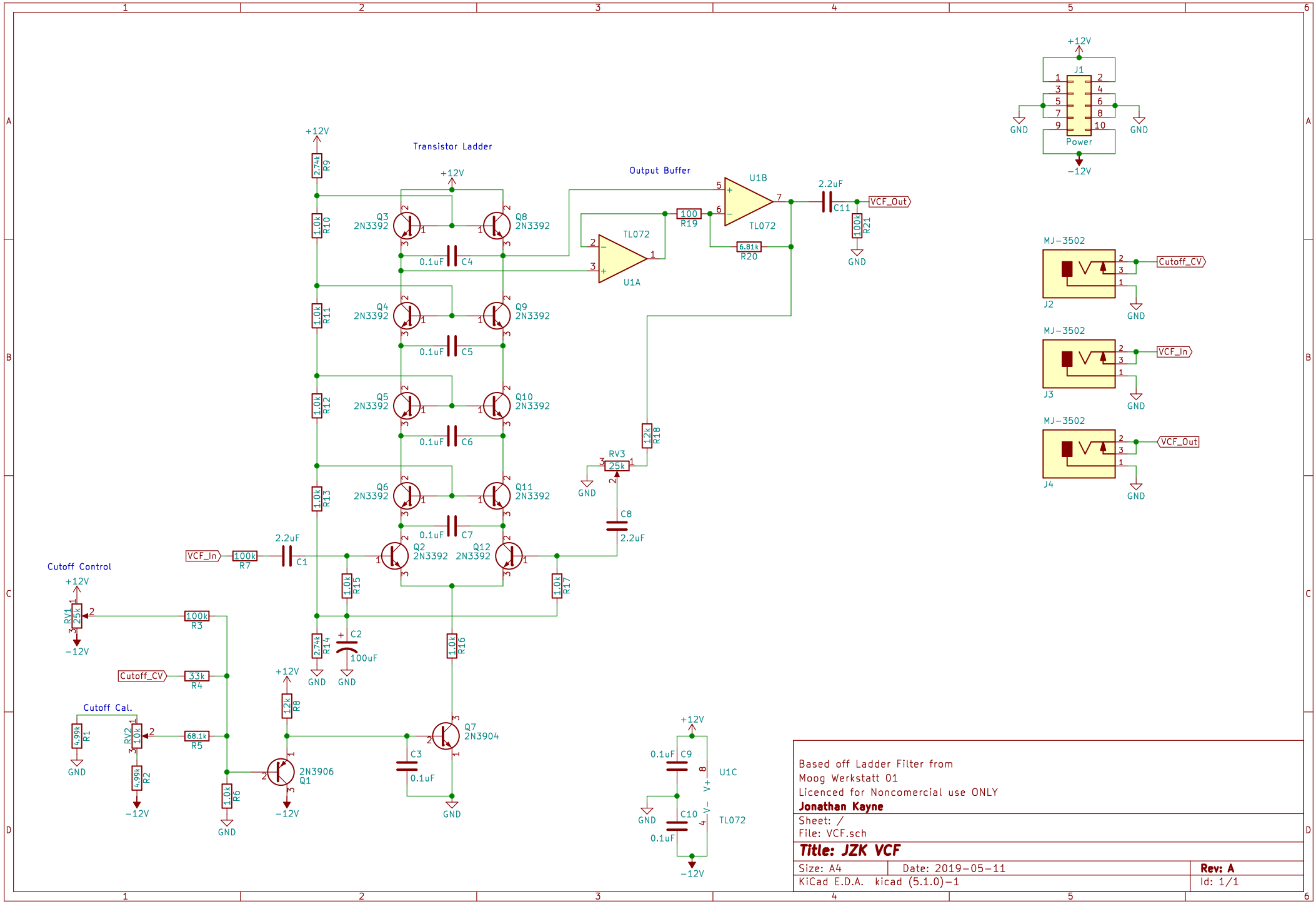

Based off Ladder Filter from
Moog Werkstatt 01
Licenced for Noncomercial use ONLY
Jonathan Kayne

Sheet: /
File: VCF.sch

Title: JZK VCF

Size: A4	Date: 2019-05-11	**Rev: A**
KiCad E.D.A. kicad (5.1.0)-1		Id: 1/1