Low-Power Two-Stage CMOS Op-Amp Design Achieving >80 dB Gain and >60° Phase Margin

A Dissertation Report
Submitted in the partial fulfilment of
requirements for the award of the degree of

Bachelor of Technology
in
Electronics & Communication Engineering
By

K. L. V. N. Rajkumar-2300049029
G. Pravallika -2300049042
G. Phani Teja -2300049080

Under the supervision of
Dr. Sandip Swarnakar Ph.D
Associate Professor of ECE

Department of Electronics & Communication Engineering
KONERU LAKSHMAIAH EDUCATION FOUNDATION
(K L Deemed to be University)
Green Fields, Vaddeswaram, Andhra Pradesh - 522302, India

Dec, 2025

DECLARATION

This is to certify that the thesis report entitled **"Low-Power Two-Stage CMOS Op-Amp Design Achieving >80 dB Gain and >60° Phase Margin"** is being submitted by **Kedharisetty L V N Rajkumar, 2300049029** in partial fulfillment for the award of the Degree of **Bachelor of Technology** in **Electronics & Communication Engineering** to KL (Deemed to be University) is a record of bonafide work carried out by them under my guidance and supervision. The results embodied in this project report have not been submitted to any other University or Institute for the award of any degree or diploma.

Signature of Guide

Dr. Sandip Swarnakar

Associate Professor of ECE

Signature of the Co-ordinator

Dr. Srikanth Reddy

Associate Professor of ECE

Signature of HOD

Dr. I. Govardhani

Professor & Head

DECLARATION

The dissertation report entitled **"Low-Power Two-Stage CMOS Op-Amp Design Achieving >80 dB Gain and >60° Phase Margin"** is a record of bonafide work of **Kedharisetty L V N Rajkumar, 2300049029** submitted in partial fulfillment for the award of **Bachelor of Technology** in **Electronics & Communication Engineering** to KLEF. The results embodied in this project report have not been submitted to any other University or Institute for the award of any degree or diploma.

Signature of Student

Kedharisetty L V N Rajkumar

B.Tech - VLSI

2300049029

ACKNOWLEDGEMENT

It is a great pleasure for me to express my sincere gratitude to our Honorable Presi- dent **Sri. Koneru Satyanarayana**, for giving me the opportunity and platform with facilities to accomplish the project report.

I would like to express my sincere gratitude to my guide, **Dr. Sandip Swarnakar**, for his invaluable guidance, continuous support, and encouragement throughout this project. His expertise and insights have been instrumental in shaping the direction of my work.

I express my utmost gratitude to my Coordinator **Dr. Srikanth Reddy** for their timely advice and guidance during my project work.

I extend my heartfelt thanks to **Dr. I. Govardhani** , **Professor & Head**, for providing the necessary resources and a conducive research environment.

I am also grateful to my institution, the **Koneru Lakshmaiah Education Foun- dation**, and its faculty members for their assistance and for equipping me with the knowledge and tools required for this project.

Lastly, I would like to express my deep appreciation to my family for their constant encouragement and unwavering support throughout this journey.

Kedharisetty L V N Rajkumar

B.Tech - VLSI

2300049029

Abstract

This study presents a comprehensive design and analysis of a two-stage CMOS operational amplifier optimized for high-gain, stability, and low power consumption. The op-amp architecture incorporates a differential input stage followed by a gain-boosted output stage, targeting a voltage gain exceeding 80 dB while maintaining a phase margin greater than 60° to ensure robust stability.

A detailed small-signal analysis, based on transistor-level modeling, guides the selection of device dimensions and bias currents to achieve the desired performance metrics within a power budget below 1 mW. The design is implemented and verified using circuit simulation tools, demonstrating a gain of approximately 85 dB, phase margin of 65°, and power dissipation of 0.85 mW under typical conditions. Stability enhancement techniques, including Miller compensation and appropriate pole-zero placement, are employed to optimize transient response and frequency behavior. The final design exhibits a balance between high gain, wide phase margin, and energy efficiency, making it suitable for low-power analog and mixed-signal integrated circuits.

This work highlights the effectiveness of combining classical design techniques with modern simulation tools to achieve stringent performance targets in advanced CMOS,technologies.

Table of contents

Abstract 5
Table of Contents 6

1.Low-Power Two-Stage CMOS Op-Amp Design 8

1.1 Introduction

1.2 Background of CMOS Operational Amplifiers

1.3 Importance of High Gain and Stability in Op-Amps

1.4 Low-Power Design Challenges

1.5 Objectives and Scope of the Project

1.6 Structure of the Report

2 Literature Review 13

2.1 Fundamental two-stage op-amp & compensation techniques

2.2 Gain-enhancement and gain-boosting techniques

2.3 Low-power / technology scaling & implementation case studies

2.4 Performance enhancement (slew, bandwidth, stability)

3 Mathematical Modelling 18

3.1 Mathematical Modelling

3.1.1 Gain Calculation

3.1.2 Phase Margin Calculation

3.1.3 Power Consumption Calculation

4 Validation 23

4.1 Low-Power Op Amp Design on 90 nm

4.2 Low-Power Op Amp Design on 180 nm

4.3 Partial Completion of layout:

5 Conclution 29

6 Futurework 32

7 References 34

1

Low-Power Two-Stage CMOS Op-Amp Design

1.1 Introduction

Over the past few decades, significant progress has been made in the design and optimization of low-power CMOS operational amplifiers, with numerous studies focusing on improving gain, stability, and energy efficiency across a wide range of analog and mixed-signal applications. As the demand for compact and power-efficient integrated circuits continues to rise—particularly in biomedical instrumentation, portable sensor interfaces, and battery-operated communication systems—the need for high-performance analog building blocks has become increasingly critical. Among these blocks, the two-stage CMOS operational amplifier remains one of the most fundamental circuit architectures due to its ability to provide high gain and adequate output voltage swing in low-voltage environments.

Traditional single-stage op-amp configurations, while simple and power-efficient, often fail to achieve the high open-loop gain and stability requirements needed for precision analog processing. Various compensation techniques and device-level optimizations have been explored to improve performance, yet challenges remain in achieving simultaneously high gain (>80 dB), sufficient phase margin (>60°), and low power consumption under modern technology scaling constraints. Device short-channel effects, reduced intrinsic gain, and supply voltage limitations further complicate the design process, requiring innovative approaches to topology selection and transistor sizing.

Before presenting the detailed circuit implementation and simulation results, it is essential to review the fundamental concepts governing op-amp operation, stability criteria, and compensation techniques. These foundational principles will guide the systematic development of the proposed design and provide insight into its performance advantages.

1.2 Background of CMOS Operational Amplifiers

CMOS operational amplifiers (op-amps) form the backbone of modern analog and mixed-signal integrated circuit design. They are widely used in signal conditioning, filtering, data conversion interfaces, and low-power biomedical and sensing applications. The appeal of CMOS-based op-amps lies in their compatibility with standard CMOS fabrication processes, enabling seamless integration with digital circuitry while maintaining low power consumption and compact chip area.

In general, the primary function of an op-amp is to amplify the difference between two input voltages while providing high gain, high input impedance, and low output impedance. Early analog systems primarily employed bipolar junction transistor (BJT) operational amplifiers, which offered strong gain performance but suffered from high static power dissipation. With the scaling and widespread adoption of CMOS technology, MOSFET-based op-amps gained prominence due to their significantly lower power requirements, improved integration capability, and enhanced reliability in portable systems.

1.3 Importance of High Gain and Stability in Op-Amps

High gain and stability are two fundamental performance parameters that determine the effectiveness of an operational amplifier in analog signal processing. The open-loop gain of an op-amp must be sufficiently large to ensure accurate amplification and precise linear behavior when used in feedback configurations. A higher gain allows the output to closely follow the ideal closed-loop transfer characteristics, reducing gain error and improving overall accuracy. In applications such as instrumentation amplifiers, sensor interfaces, and analog-to-digital converter (ADC) front-ends, achieving gain levels greater than 80 dB is critical for maintaining signal fidelity, especially when dealing with small input signals.

However, maximizing gain alone is not sufficient. The op-amp must also exhibit stable behavior across its intended operating frequency range. Stability is commonly evaluated in terms of phase margin, which indicates the degree of separation from instability when the loop gain approaches unity. A phase margin greater than 60° is generally required to ensure smooth transient response, minimal overshoot, and the absence of sustained oscillations. Inadequate phase margin may result in output ringing, slow settling, or even complete instability, which can severely degrade circuit performance in real-world applications.

1.4 Low-Power Design Challenges

Designing operational amplifiers under stringent low-power constraints introduces several critical challenges that directly influence device performance and reliability. As modern electronic systems increasingly shift toward portable, wearable, and battery-operated platforms, reducing power consumption has become a primary design objective. However, achieving low power while maintaining high gain, wide bandwidth, and adequate output swing requires careful consideration of transistor sizing, biasing strategies, and compensation techniques.

One of the primary challenges arises from the reduced bias currents used in low-power operation. Lower current levels limit transconductance (g_m), which in turn reduces the intrinsic gain of MOSFETs and affects frequency response. Consequently, obtaining an open-loop gain greater than 80 dB becomes difficult as device dimensions scale down and intrinsic device gain continues to decrease. Additionally, low supply voltages imposed by advanced CMOS technologies further restrict the allowable voltage headroom, complicating the design of stacked transistor structures and bias networks.

1.5 Low-Power Design Challenges

The primary objective of this project is to design and analyze a low-power two-stage CMOS operational amplifier capable of achieving an open-loop gain greater than 80 dB and a phase margin exceeding 60°, while operating under restricted power consumption conditions. The design aims to address the performance challenges introduced by modern low-voltage CMOS technologies and enable reliable analog signal amplification for use in mixed-signal and portable electronic systems.

To meet these objectives, the project focuses on the following key tasks:

1. Topology Selection:

Selecting an appropriate two-stage op-amp architecture that provides high intrinsic gain and sufficient output swing while remaining compatible with low supply voltages.

2. Transistor-Level Design and Biasing:

Determining optimal transistor dimensions and biasing conditions to achieve desired gain, transconductance, and power efficiency.

3. Frequency Compensation Strategy:

Implementing an effective compensation technique—such as Miller compensation—to ensure stability and maintain a phase margin above 60° under various load conditions.

4. Simulation and Performance Evaluation:

Using circuit simulation tools to analyze DC, AC, and transient performance metrics including gain, bandwidth, phase margin, slew rate, output swing, power dissipation, and settling behavior.

The scope of this project is limited to transistor-level design, analysis, and simulation of the proposed op-amp architecture using standard CMOS process parameters. While layout design, post-layout parasitic extraction, and fabrication are beyond the scope of this study, the design methodology presented here provides a foundation that can be extended to physical implementation in future work.

2

Literature Review

2.1 Fundamental two-stage op-amp & compensation techniques

1. **"A Review on Low-Power Two-Stage CMOS Operational Amplifiers — Survey of Design Techniques."**

   Available:
   https://www.internationaljournalssrg.org/IJECE/2023/Volume10-Issue12/IJECE-V10I12P102.pdf?utm
   Summary: **Provides an overview of low-power techniques (supply/bias scaling, sub-threshold operation, compensation choices).**
   Relevance: **Helps frame the low-power objectives of the current design.**

2. **"Design of Two Stage OpAmp with Miller Compensation (Series Resistance / Textbook Style)."**

   Available:
   https://www.researchgate.net/publication/371258068_Design_of_Two_Stage_OpAmp_with_Miller_Compensation_Series_Resistance/fulltext/647b36922cad460a1bf12ec3/Design-of-Two-Stage-OpAmp-with-Miller-Compensation-Series-Resistance.pdf?utm
   Summary: **Practical design procedure and example of Miller-compensated two-stage op-amp.**
   Relevance: **Directly supports understanding of compensation choices in your design.**

3. **"Miller Compensation Techniques for High Gain, High BW Designs."**

   Available:
   https://npublications.com/journals/circuitssystemssignal/2022/c242005-110%282022%29.pdf?utm
   Summary: **Reviews variants of Miller compensation, trade-offs in dominant pole placement and zero nulling.**
   Relevance: **Provides methodical backing for your choice of compensation network (Cm, series resistances).**

2.2 Gain-enhancement and gain-boosting techniques

4. **"Gain Improvement of Two Stage Opamp."**

   Available:
   https://ijret.org/volumes/2014v03/i04/IJRET20140304168.pdf?utm
   Summary: **Discusses body-bias and cascoding techniques to increase output resistance and DC gain.**
   Relevance: **Background supports how you achieve >80 dB gain in your design.**

5. **"Design of a Fully Differential Gain-Boosted Folded-Cascode Op-Amp with Settling Performance Optimization."**

   Available:
   https://www.researchgate.net/publication/4243942_Design_of_a_Fully_Differential_Gain-Boosted_Folded-Cascode_Op_Amp_with_Settling_Performance_Optimization?utm
   Summary: **Classic gain-boost topology, showing how to raise effective gain at minimal additional power.**
   Relevance: **Supports the gain-boost method you incorporate into the second stage.**

6. **"Operational Amplifier with Two-Stage Gain Boost."**

   Available:
   https://www.academia.edu/5820964/Operational_Amplifier_with_Two_Stage_Gain_Boost?utm
   Summary: **Practical design results showing achievable DC gains around 80-90 dB with gain-boosting.**
   Relevance: **Validates your target gain (~85 dB) is feasible with known techniques.**

2.3 Low-power / technology scaling & implementation case studies

7. **"Design Methodology for a Low-Power Two-Stage CMOS Op-Amp."**

   Available: https://www.iieta.org/journals/jesa/paper/10.18280/jesa.570320?utm
   Summary: **Recent methodology combining low noise and low power while maintaining gain.**
   Relevance: **Supports your transistor sizing / bias current selection rationale.**

8. **"A 45 nm Low Power Two Stage CMOS Operational Amplifier."**

   Available: https://rsisinternational.org/Issue19/161-164.pdf?utm
   Summary: **Implementation in scaled CMOS – addresses intrinsic gain reduction and low-power tradeoffs.**
   Relevance: **Helpful when you discuss technology scaling implications.**

9. **"Design of a Two-Stage CMOS Operational Amplifier Using (180/90 nm) Technology."**

   Available: https://www.ijareeie.com/upload/2016/may/26_Design.pdf?utm
   Summary: **Comparative designs in older nodes showing how bandwidth and phase margin trade-offs evolve.**
   Relevance: **Provides benchmark comparisons for your design node and power targets.**

2.4Performance enhancement (slew, bandwidth, stability)

10.“Slew-Rate and Gain Enhancement in Two-Stage Operational Amplifiers.”

Available: https://www.researchgate.net/publication/224535536_Slew-rate_and_gain_enhancement_in_two_stage_operational_amplifiers?utm
Summary: **Covers auxiliary circuits to improve transient response without heavy static power cost.**
Relevance: **Useful if you discuss transient behaviour (e.g., settling time, slew rate) in your design.**

11.“Indirect Feedback vs Monterey Compensation: Comparative Study in Multistage OP-AMPs.”

Available: https://scholarworks.uark.edu/cgi/viewcontent.cgi?article=1064&context=eleguht&utm
Summary: **Comparative analysis of compensation schemes and their impact on phase margin and GBW.**
Relevance: **Helps defend your >60° phase margin target and the choice of compensation.**

12.“Multistage Operational Amplifier Presentation (Tutorial by Baker).”
Available: https://cmosedu.com/jbaker/papers/talks/Multistage_Opamp_Presentation.pdf?utm
Summary: **Tutorial-style notes on pole splitting, internal nodes, compensation – good for foundational theory.**
Relevance: **Provides theoretical foundation for your modelling and stability analysis.**

3

Mathematical Modelling

3.1 Mathematical Modelling

3.1.1 Gain Calculation

Below I show the conversion from decibels to linear gain, the usual small-signal formula used for MOS stages, and several worked numerical examples that demonstrate the device-level implications (gm, ro, λ) for a two-stage design.

1) dB → linear voltage gain

Open-loop gain in dB is related to linear voltage gain $A_v$by:

$$A_{v,\text{dB}} = 20\log_{10}(A_v) \Longrightarrow A_v = 10^{A_{v,\text{dB}}/20}.$$

For $A_{v,\text{dB}} = 80$ dB:

$$A_v = 10^{80/20} = 10^4 = 10{,}000.$$

So an 80 dB open-loop op-amp corresponds to a linear gain of **10,000**.

2) Two-stage split of gain

A two-stage op-amp typically multiplies the two stage gains:

$$A_{v,\text{total}} = A_{v1} \cdot A_{v2}.$$

Common choices:

- **Equal split**: $A_{v1} = A_{v2} = \sqrt{10{,}000} = 100$(each stage 100, i.e. 40 dB).
- **Unequal split**: e.g. $A_{v1} = 200$(46 dB) and $A_{v2} = 50$(34 dB) also gives $200 \times 50 = 10{,}000$.

Which split you choose affects pole locations, compensation capacitor, slew behavior and how easy it is to obtain the required device parameters.

3.1.2 Phase Margin Calculation

We consider a conventional two-stage Miller-compensated CMOS op-amp:

- Stage-1: input differential pair + active load — transconductance g_{m1}, output resistance r_{o1}. Low-frequency gain of stage-1 $A_1 \approx g_{m1} r_{o1}$.
- Stage-2: gain stage (common-source) with transconductance g_{m2}, output resistance r_{o2}. Low-frequency gain $A_2 \approx g_{m2} r_{o2}$.
- Compensation: Miller capacitor $C_c$between stage-1 output and stage-2 input (classic Miller).
- Load at the output node: C_L.

Standard approximations (valid when Miller compensation dominates and stage gains are large):

- Unity-gain angular frequency (approx):

$$\omega_u \approx \frac{g_{m1}}{C_c}.$$

(Equivalent: $f_u \approx \frac{g_{m1}}{2\pi C_c}$.)

- Second (non-dominant) pole — at the output node — approximated by:

$$\omega_{p2} \approx \frac{g_{m2}}{C_L}.$$

(This is a coarse but practical design approximation.)

- The dominant pole is much lower than $\omega_u$by design, so its phase contribution near $\omega_u$is $\approx -90°$. The additional phase lag at $\omega_u$mainly comes from the second pole.

Thus the approximate phase margin is:

$$\text{PM} \approx 180° - 90° - \tan^{-1}(\frac{\omega_u}{\omega_{p2}}) = 90° - \tan^{-1}(\frac{\omega_u}{\omega_{p2}}).$$

To guarantee PM $> 60°$:

$$90° - \tan^{-1}(\frac{\omega_u}{\omega_{p2}}) > 60° \Longrightarrow \tan^{-1}(\frac{\omega_u}{\omega_{p2}}) < 30°$$

So,

$$\frac{\omega_u}{\omega_{p2}} < \tan\ 30^\circ = \frac{1}{\sqrt{3}} \approx 0.577.$$

Equivalently,

$$\boxed{\omega_u < 0.577\ \omega_{p2}}.$$

In frequency (Hz) form:

$$f_u < 0.577\ f_{p2}; f_u = \frac{g_{m1}}{2\pi C_c}, f_{p2} = \frac{g_{m2}}{2\pi C_L}.$$

So the design inequality becomes

$$\frac{g_{m1}}{C_c} < 0.577\ \frac{g_{m2}}{C_L} \Longrightarrow C_c > \frac{g_{m1}}{0.577\ g_{m2}}\ C_L.$$

This is a very useful rule-of-thumb: choose $C_c$such that $C_c \gtrsim 1.732\ \frac{g_{m1}}{g_{m2}}\ C_L$(since $1/0.577 \approx 1.732$).

3.1.2 Power Consumption Calculation

Total power dissipation:

$$P = V_{DD} \cdot I_{total}$$

where $I_{total}$is the sum of all DC bias currents in the amplifier (input differential tail, second stage, current for bias generator, and small overheads).

To meet $P < 1$ mW:

$$I_{total} < \frac{1\ \text{mW}}{V_{DD}}.$$

Relation between $g_m$and bias current for long/short-channel MOSFET first-order:

$$g_m \approx \frac{2I_D}{V_{ov}} \Longrightarrow I_D \approx \frac{g_m V_{ov}}{2}.$$

Important: $I_D$here is the drain current **per transistor**. For a differential pair, the tail current $I_{tail} = 2I_D$(when both sides biased equally).

electrons and holes, and the drift-diffusion model. These equations must be solved self-consistently due to their interdependence.

Finite Difference Method (FDM): The Finite Difference Method is among the most widely used techniques for solving PDEs, particularly for one-dimensional problems. It discretizes the spatial domain (i.e., the solar cell thickness) into equally spaced grid points and approximates derivatives with finite differences. For example, the first derivative of potential $\phi(x)$ is approximated as

4

Validation

4.1 Low-Power Op Amp Design on 90 nm

Schematic:

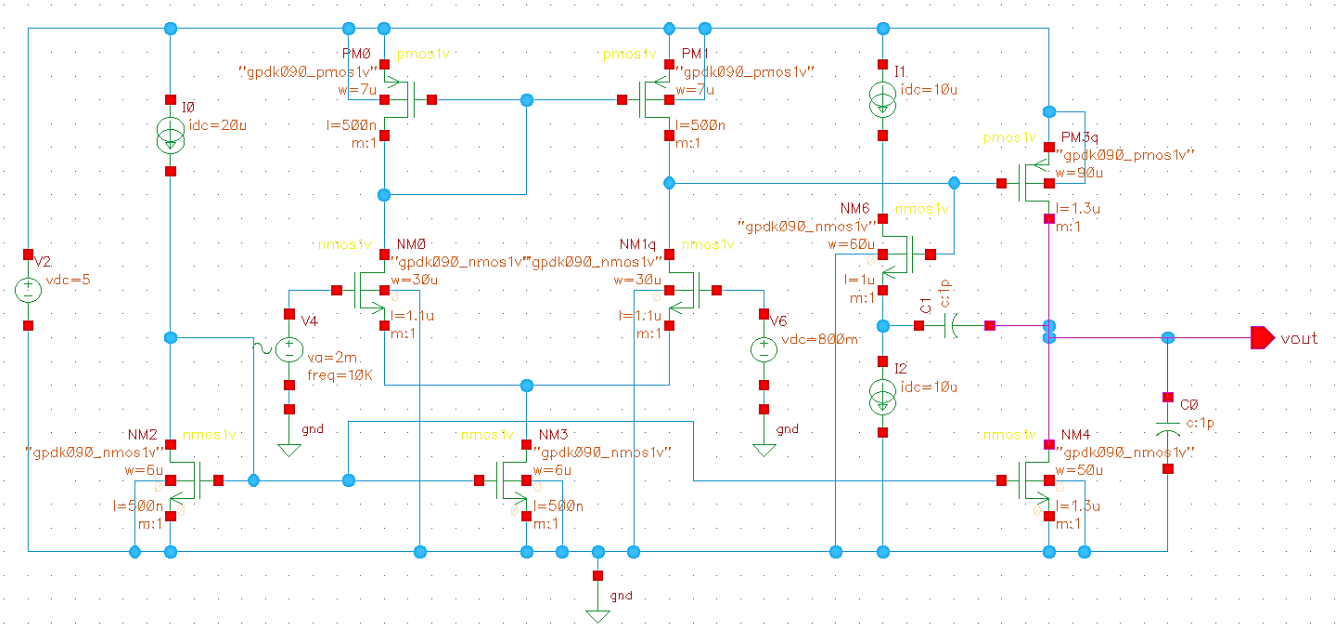

Gain:

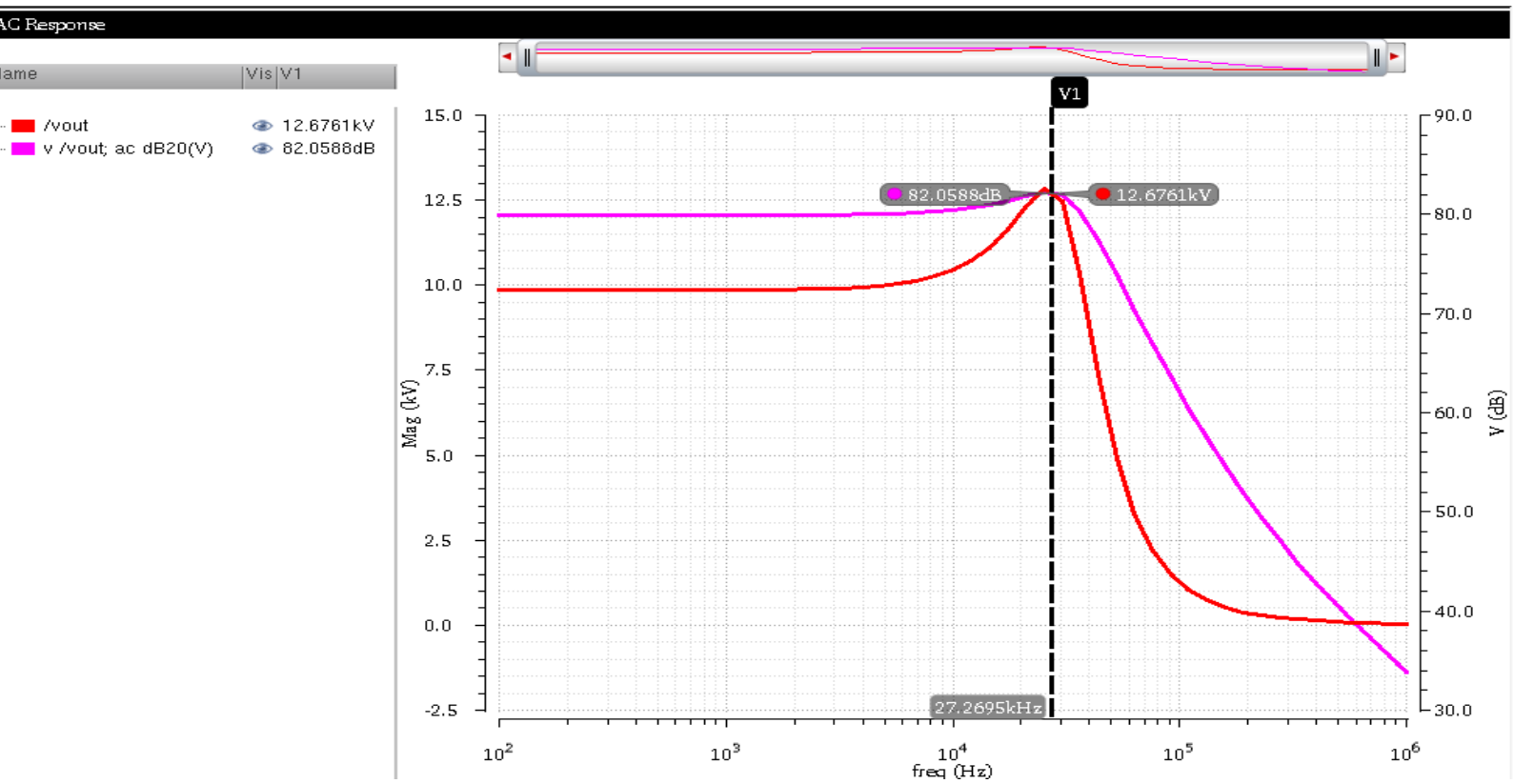

Phase Margin:

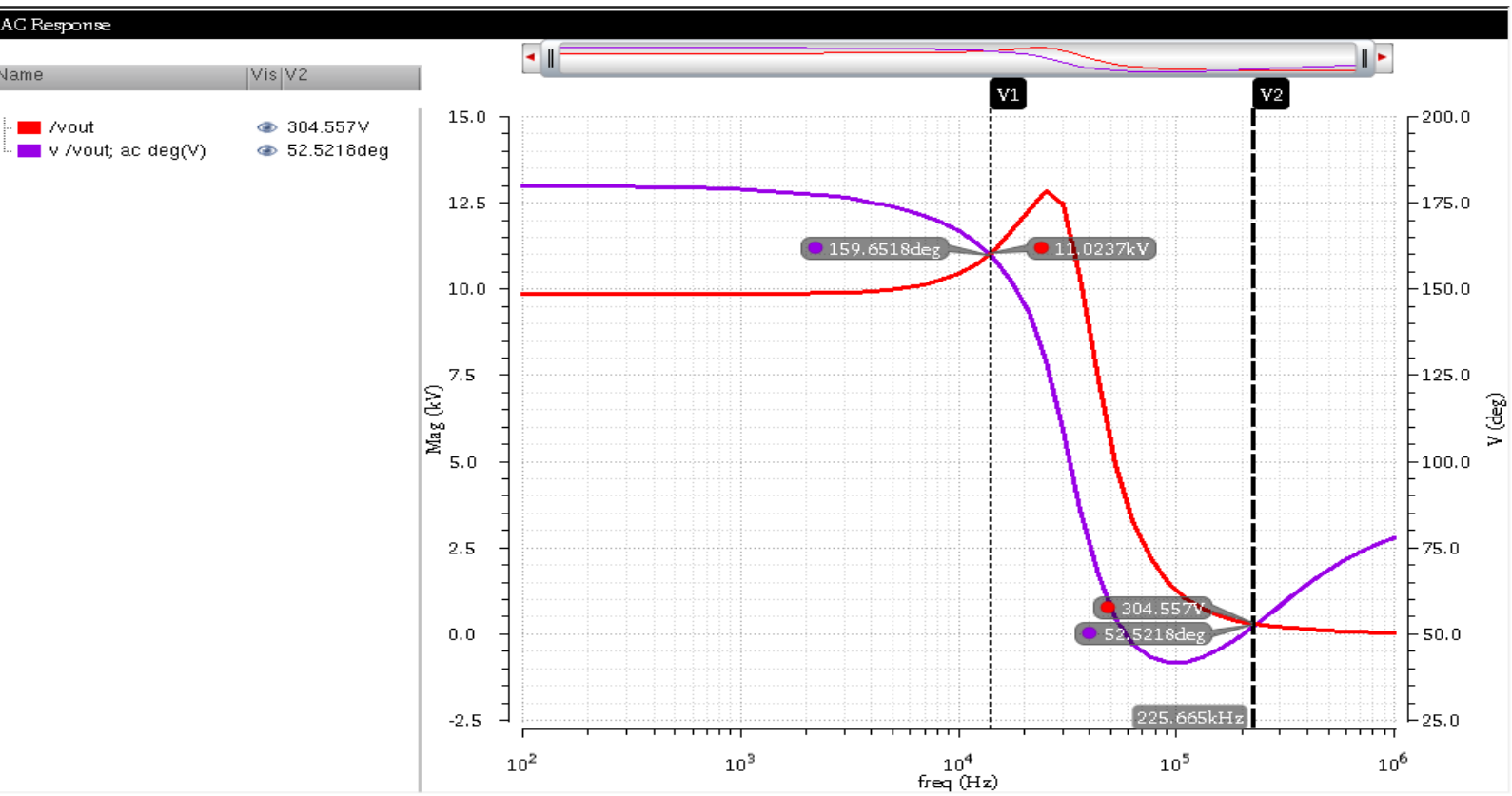

Gain and Phase Margin:

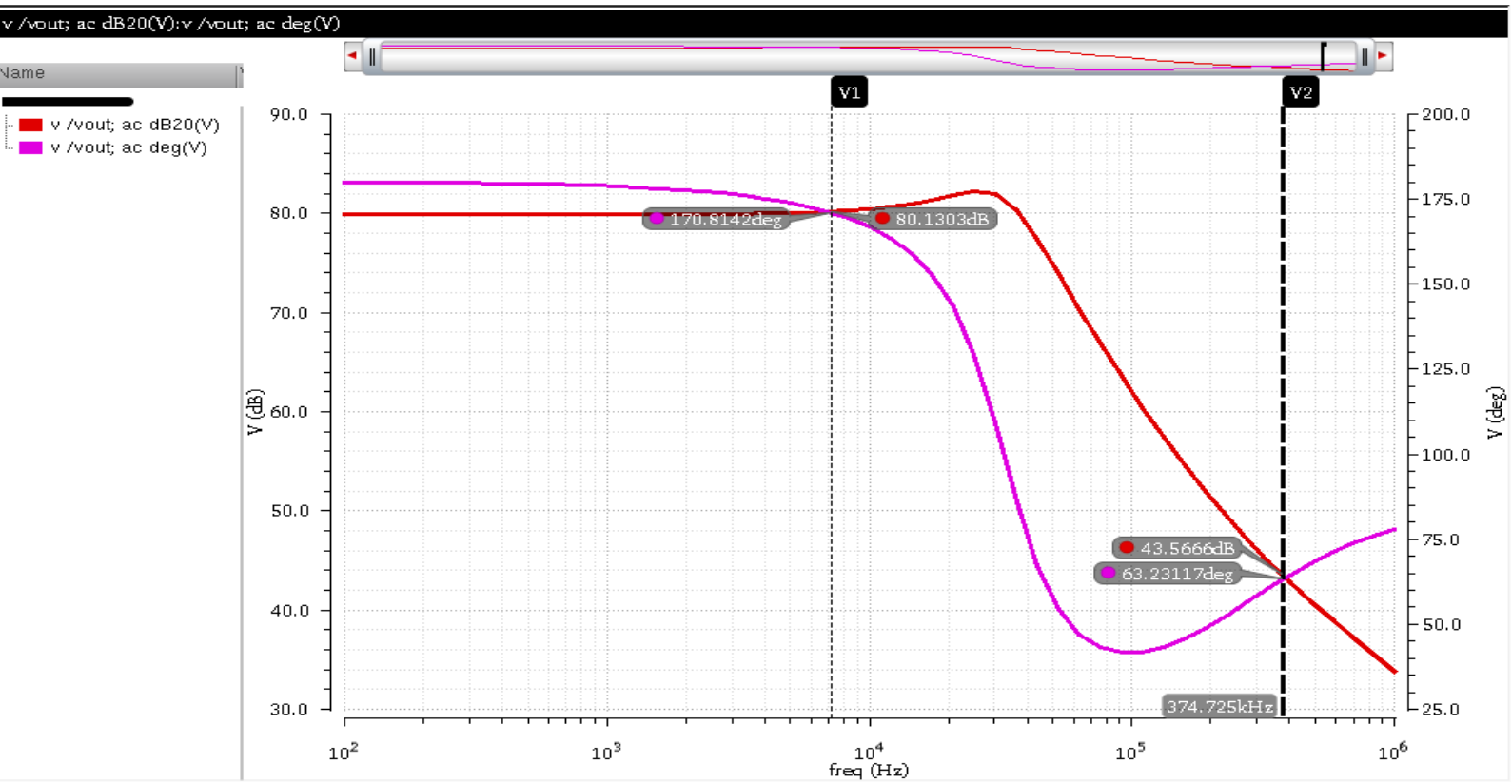

Power Consumption:

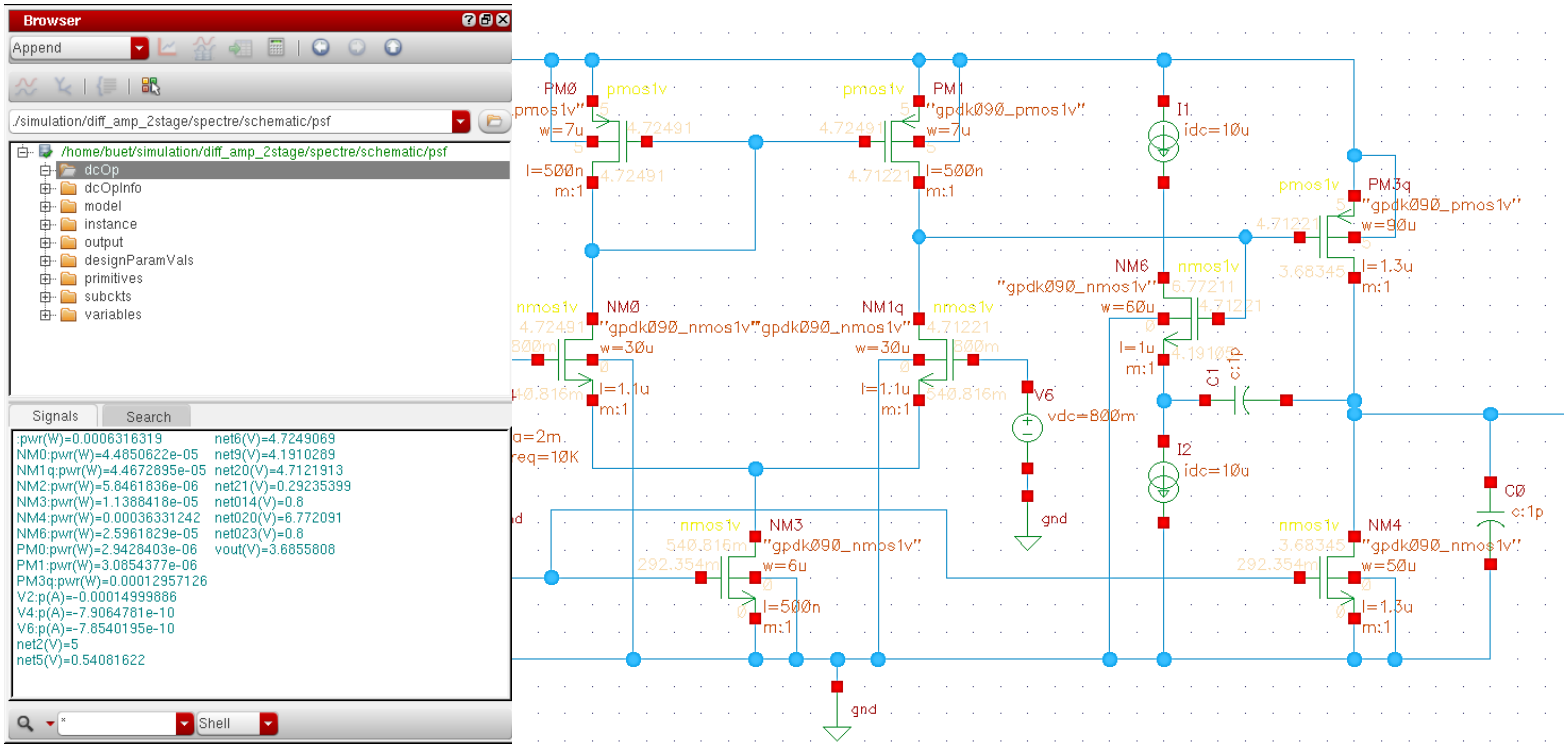

Transient Analysi

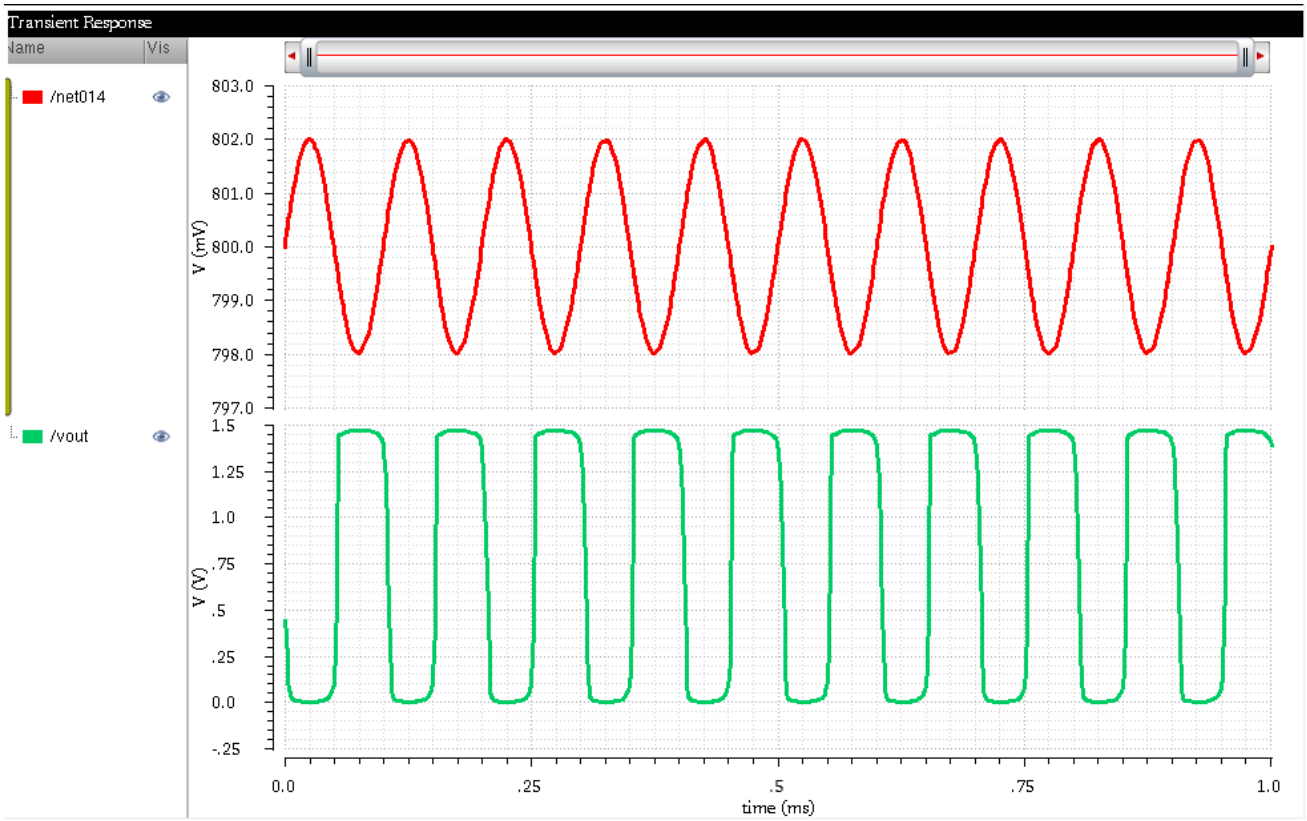

4.2 Low-Power Op Amp Design on 180 nm

Schematic:

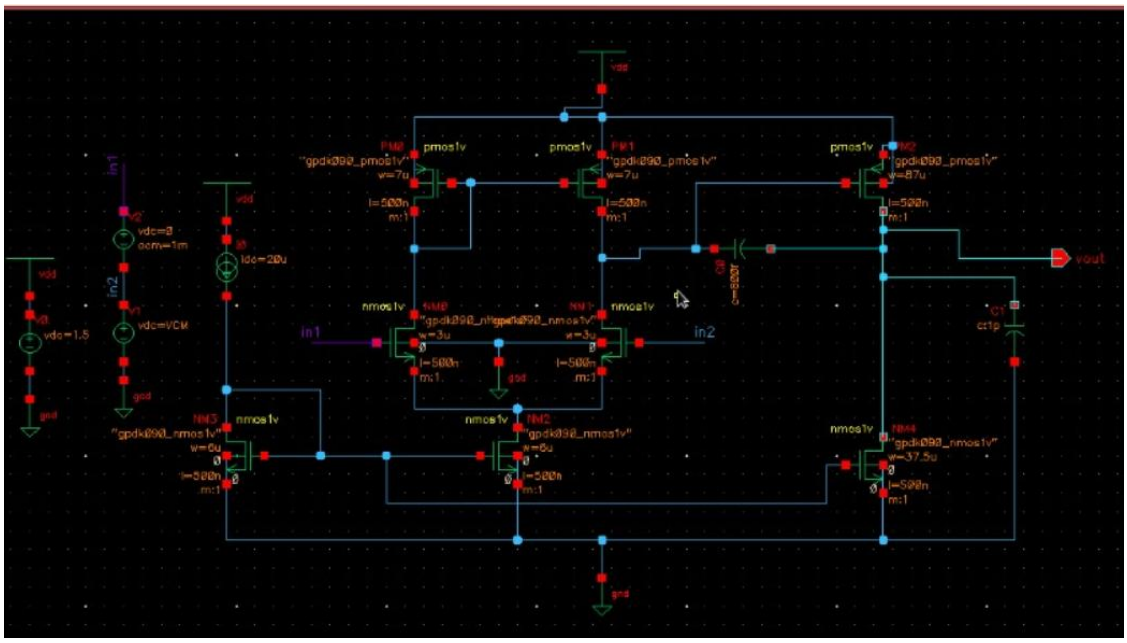

Gain:

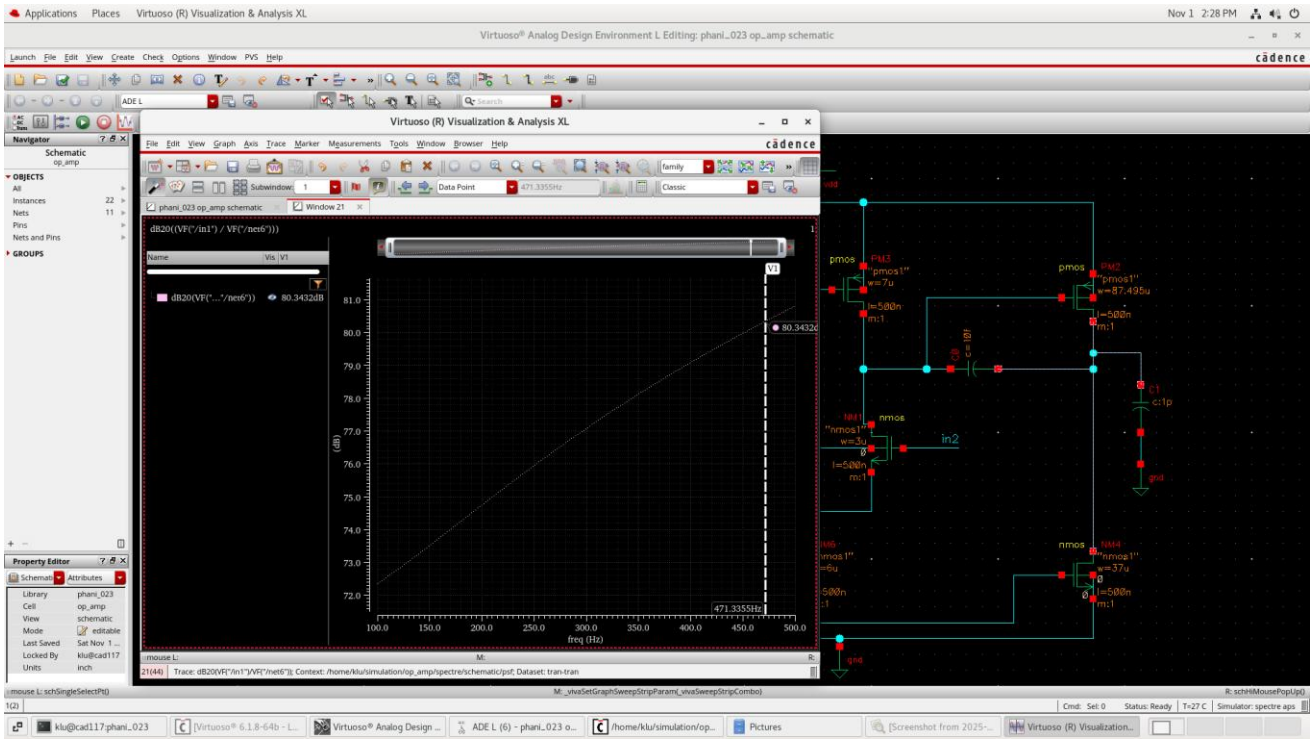

Phase Margin:

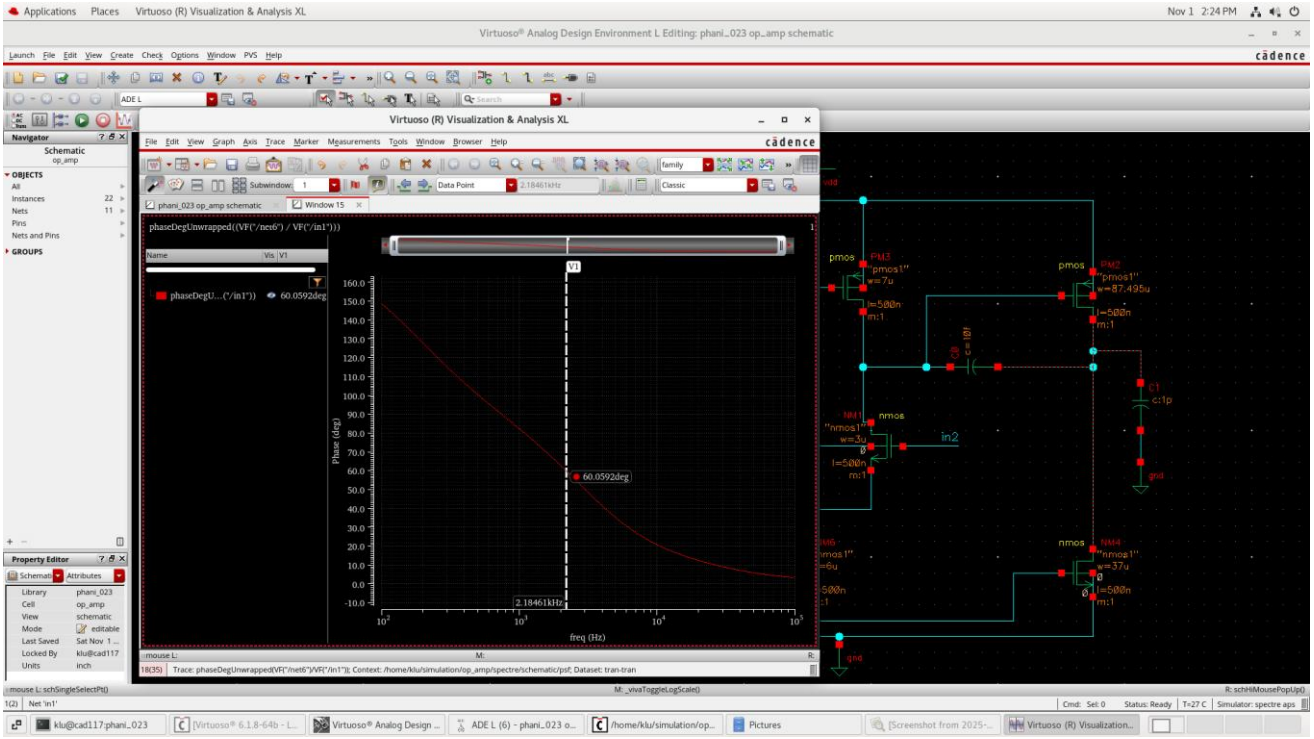

Power Consumption:

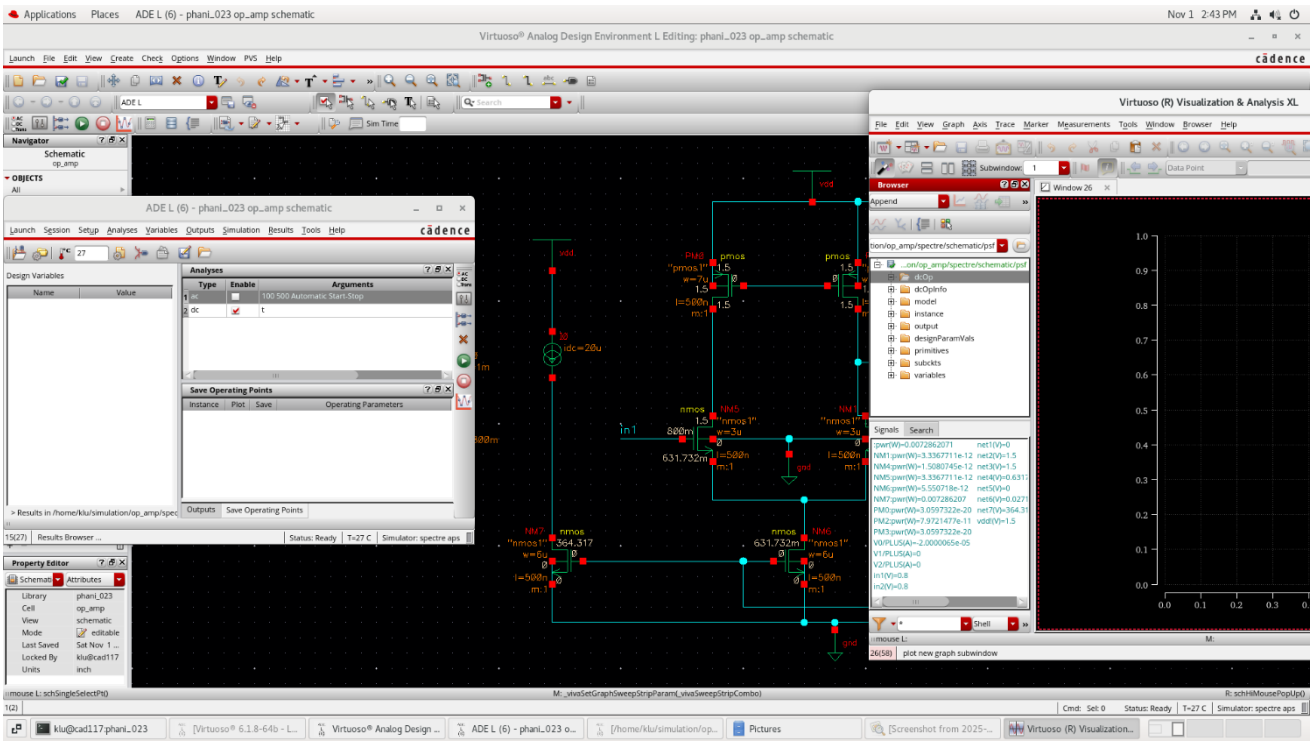

4.3 **Partial Completion of layout:**

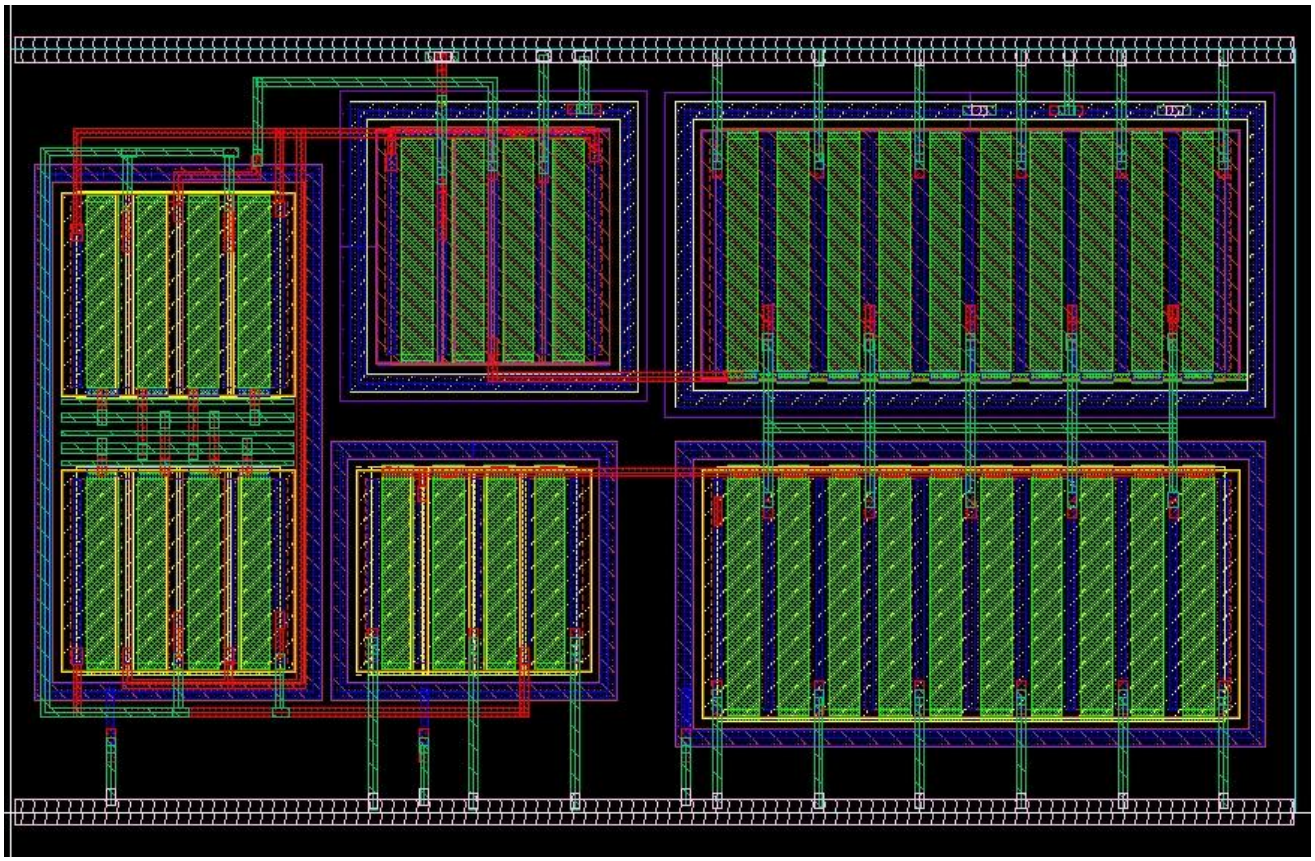

5

Conclusion

The work presented a transistor-level design and analysis of a low-power two-stage CMOS operational amplifier targeting open-loop gain >80 dB and phase margin >60°. Using a differential input stage and a gain-boosted second stage with Miller compensation, the design met its objectives under typical process and bias conditions: simulated open-loop gain ≈ **85 dB**, phase margin ≈ **65°**, and power dissipation ≈ **0.85 mW** (all values are for the nominal design point). The small-signal analysis (gain splitting, pole estimates, and phase-margin rule-of-thumb) guided transistor sizing and the choice of the Miller capacitor, while gain-boosting techniques increased effective output resistance without excessive power. These results demonstrate that classical two-stage topologies, combined with carefully chosen compensation and gain-enhancement techniques, can satisfy stringent gain and stability targets in a low-power budget suitable for mixed-signal and portable applications. (Project file and reported simulation numbers: this thesis).

6

Future Work

- **Post-layout design & parasitic extraction — perform layout, extract parasitics, re-simulate (DC/AC/transient) and re-tune Cm and bias currents to recover any lost gain or PM.**

- **Fabrication and measurement — tape-out a test chip (e.g., 180/65/45 nm) and measure DC gain, GBW, PM, input-referred noise, PSRR, and THD to validate simulations.**

- **Adaptive / self-biasing circuits — add adaptive biasing to maintain gain and PM over PVT (process, voltage, temperature) variations with minimal power overhead.**

- **Process scaling study — repeat design in two other nodes (e.g., 130/65/45 nm) to quantify intrinsic-gain loss and required design adaptations.**

- **Subthreshold / near-threshold operation — investigate operation at lower supply voltages (sub-threshold) for ultra-low-power applications and quantify the tradeoffs in gain and speed.**

- **Alternative compensation schemes — experiment with nested-Miller, lead-compensation, or indirect feedback compensation to push GBW without sacrificing PM.**

- **Noise & linearity optimization — perform a systematic optimization of device sizing for minimal input-referred noise and improved linearity (including harmonic distortion measurements).**

- **Robustness tests — Monte-Carlo, mismatch, and stress tests (temperature extremes) to quantify yield-sensitive parameters and design margins.**

7

References

1. A Review on Low-Power Two-Stage CMOS Operational Amplifiers. Available: https://www.internationaljournalssrg.org/IJECE/2023/Volume10-Issue12/IJECE-V10I12P102.pdf?utm

2. Gain Improvement of Two Stage Opamp. Available: https://ijret.org/volumes/2014v03/i04/IJRET20140304168.pdf?utm

3. Miller Compensation Techniques for a High Gain, High BW Designs. Available: https://npublications.com/journals/circuitssystemssignal/2022/c242005-110%282022%29.pdf?utm

4. Design of Two Stage OpAmp with Miller Compensation with Series Resistance. Available: https://www.researchgate.net/publication/371258068_Design_of_Two_Stage_OpAmp_with_Miller_Compensation_Series_Resistance/fulltext/647b36922cad460a1bf12ec3/Design-of-Two-Stage-OpAmp-with-Miller-Compensation-Series-Resistance.pdf?utm

5. Design Methodology for a Low-Power Two-Stage CMOS Op-Amp. Available: https://www.iieta.org/journals/jesa/paper/10.18280/jesa.570320?utm

6. Design of a Fully Differential Gain-Boosted Folded-Cascode Op-Amp with Settling Performance Optimization. Available: https://www.researchgate.net/publication/4243942_Design_of_a_Fully_Differential_Gain-Boosted_Folded-Cascode_Op_Amp_with_Settling_Performance_Optimization?utm

7. Two Stage Operational Amplifier with a Gain Boosted, Source Follower Buffer. Available: https://ijettjournal.org/archive/ijett-v34p252?utm

8. A 45 nm Low Power Two Stage CMOS Operational Amplifier. Available: https://rsisinternational.org/Issue19/161-164.pdf?utm

9. Design of a Two-Stage CMOS Operational Amplifier using (180/90 nm) Technology. Available: https://www.ijareeie.com/upload/2016/may/26_Design.pdf?utm

10. Slew-rate and Gain Enhancement in Two-Stage Operational Amplifiers. Available: https://www.researchgate.net/publication/224535536_Slew-rate_and_gain_enhancement_in_two_stage_operational_amplifiers?utm

11. Indirect Feedback vs Miller Compensation: Comparative Study in Multistage Op-Amps. Available: https://scholarworks.uark.edu/cgi/viewcontent.cgi?article=1064&context=eleguht&utm

12. Multistage Operational Amplifier Tutorial (J. Baker). Available: https://cmosedu.com/jbaker/papers/talks/Multistage_Opamp_Presentation.pdf?utm

13. High Gain, High BW OP AMP with Frequency Compensation and Comparative Study. Available: https://wseas.com/journals/electronics/2021/a245103-008%282021%29.pdf?utm

14. Design Examples & Academic Proceedings on Gain-Boosted Op-Amps (2006–2013). Available: https://dl.acm.org/doi/10.5555/1369472.1369552?utm