Digital to Analog Converter (DAC)

A Project Report Submitted in partial fulfillment of the requirements for the award of the degree of

BACHELOR OF TECHNOLOGY
in
ELECTRONICS AND COMMUNICATION ENGINEERING

by

K L V N RajKumar - 2300049029

A. Srinivasa Rao - 2300040418

M Vara Bhaskar - 2300040463

Under the Guidance of
M. Lakshmana Kumar

Department of Electronics & Communication Engineering

KONERU LAKSHMAIAH EDUCATION FOUNDATION

(K L E F deemed to be University)
Green Fields, Vaddeswaram, Andhra Pradesh - 522302, India

November, 2025

CERTIFICATE

This is to certify that the thesis report entitled **"Digital to Analog Converter (DAC)"** is being submitted by **A Srinivasa Rao, 2300040418** in partial fulfillment for the award of the Degree of **Bachelor of Technology** in **Electronics & Communication Engineering** to KL (Deemed to be University) is a record of Bonafide work carried out by them under my guidance and supervision. The results embodied in this project report have not been submitted to any other University or Institute for the award of any degree or diploma.

Signature of Guide

M Lakshmana Kumar

Assistant Professor of ECE

DECLARATION

The dissertation report entitled **"Digital to Analog Converter (DAC)"** is a record of Bonafide work of **A Srinivasa Rao, 2300040418** submitted in partial fulfillment for the award of **Bachelor of Technology** in **Electronics & Communication Engineering** to KLEF. The results embodied in this project report have not been submitted to any other University or Institute for the award of any degree or diploma.

Signature of Student
A Srinivasa Rao,
2300040418
B.Tech - ECE

ACKNOWLEDGEMENT

It is a great pleasure for me to express my sincere gratitude to our Honorable Presi- dent **Sri. Koneru Satyanarayana**, for giving me the opportunity and platform with facilities to accomplish the project report.

I would like to express my sincere gratitude to my guide, **M. Lakshmana Kumar**, for his invaluable guidance, continuous support, and encouragement throughout this project. His expertise and insights have been instrumental in shaping the direction of my work.

I extend my heartfelt thanks to **Dr I. Govardhini**, **Professor & Head**, for providing the necessary resources and a conducive research environment.

I am also grateful to my institution, the **Koneru Lakshmaiah Education Foun- dation**, and its faculty members for their assistance and for equipping me with the knowledge and tools required for this project.

Lastly, I would like to express my deep appreciation to my family for their constant encouragement and unwavering support throughout this journey.

A Srinivasa Rao,
2300040418
B.Tech - ECE

Abstract

This project focuses on the design and implementation of a Digital-to-Analog Converter (DAC) in 90nm CMOS technology, optimized for low power consumption and high-speed performance. The DAC employs an R-2R ladder architecture, which ensures precision and scalability while minimizing area and power requirements.

Key components such as binary switches and operational amplifiers are carefully designed to achieve high linearity and low distortion. The circuit is simulated using advanced EDA tools, ensuring compliance with 90nm process design rules.

The proposed DAC is targeted for applications in high-speed communication systems, offering a resolution of 6 bits and an update rate of 5GS/s. Simulation results demonstrate the DAC's efficiency in terms of power dissipation, speed, and accuracy, making it suitable for modern VLSI applications.

1. INTRODUCTION

Digital-to-Analog Converters (DACs) are crucial in linking digital systems to the analog world, especially in communication, instrumentation, and control applications that require analog signals. Among various types of DACs, the current-steering DAC (CS-DAC) architecture stands out because of its exceptional high-speed performance and scalability in advanced CMOS processes. Unlike resistor-based DACs, the CS-DAC uses MOSFET current sources that steer currents through binary-weighted branches corresponding to the digital input codes. This architecture generates output currents that can be converted into proportional voltages, offering advantages such as smaller chip area, faster settling times, and suitability for driving resistive loads directly.

The CS-DAC's method of steering constant currents through different transistor switches achieves higher linearity and lower glitch energy, making it ideal for high-frequency applications like wireless communication and high-speed data conversion. Additionally, current-steering DACs can be designed to operate with differential outputs, improving noise immunity and signal integrity. Calibration techniques and careful transistor sizing further enhance precision and reduce mismatches in current sources. Designing a 4-bit binary-weighted CS-DAC in 180nm CMOS, as focused on in this project, involves balancing low power consumption with high accuracy, making it well-suited for emerging applications that demand efficient and precise analog output from digital signals.

2. LITERATURE SURVEY

Ashok Kumar Adepu and Balaji Narayanam, *"Design of a Segmented Current Steering Digital-to-Analog Converter Using PMOS Cascode Current Source in UMC 65 nm Technology,"*

This paper presents the design and simulation of an 8-bit segmented current-steering DAC employing PMOS cascode current sources in 65 nm CMOS technology. The proposed 4-bit unary and 4-bit binary segmentation achieves reduced glitch energy, improved INL/DNL, and minimized power and area using a 2-bit binary-to-thermometer decoder with row-column architecture.

***Yuanhao Liu and Lan Dai**, "Design of 1G/S 10-bit Current-Steering Analog-to-Digital Converter," Journal of Physics: Conference Series, vol. 3046, 012004,2025.*

*This paper proposes a high-speed 10-bit current-steering DAC architecture designed using the TSMC N65 CMOS process, achieving a sampling rate of 1 GS/s. The converter employs a **2+4+4 segmented structure**, combining binary and thermometer encoding to balance linearity, area efficiency, and speed.*

Yuanhao Liu and Lan Dai, *"Design of 1G/S 10-bit Current-Steering Analog-to-Digital Converter," Journal of Physics: Conference Series,* vol. 3046,012004,2025.

This paper proposes a high-speed 10-bit current-steering DAC architecture designed using the TSMC N65 CMOS process, achieving a sampling rate of 1 GS/s. The converter employs a **2+4+4 segmented structure**, combining binary and thermometer encoding to balance linearity, area efficiency, and speed.

Suvarna Mujumdar, Sajad A. Loan, and Nelofer Afzal, *"CNTFET-Based 4-bit Thermometer Current Steering Digital-to-Analog Converter: Design and Analysis," Analog Integrated Circuits and Signal Processing,* vol. 114,

pp.241–251,2023.

This work introduces a **4-bit thermometer-coded current-steering DAC (TCS-DAC)** designed using **carbon nanotube field-effect transistors (CNTFETs)** at the 32 nm technology node, comparing its performance with conventional CMOS implementations.

Smruti Lekha Samanta and Santanu Sarkar, *"An On-Chip Partial Self-Healing Calibration Technique for 10-Bit Reused Distributed Current-Steering DAC," Analog Integrated Circuits and Signal Processing,* vol. 113, pp.353–360,2022.

This paper proposes a novel **on-chip partial self-healing calibration** method to address amplitude mismatch errors in **current-steering DACs (CS-DACs)** with reused distributed architectures.

binary-weighted current steering provides a simple yet effective trade-off between circuit complexity, speed, and precision.

3.DESIGN METHDOLOGY:

1.What Is a R/2nR DAC Circuit?

The R/2nR DAC circuit, otherwise known as the *binary-weighted-input* DAC, is a variation on the inverting summing op-amp circuit. (Note that "summing" circuits are sometimes also referred to as "summer" circuits.)

If you recall, the classic inverting summing circuit is an operational amplifier using negative feedback for controlled gain, with several voltage inputs and one voltage output. The output voltage is the inverted (opposite polarity) sum of all input voltages:

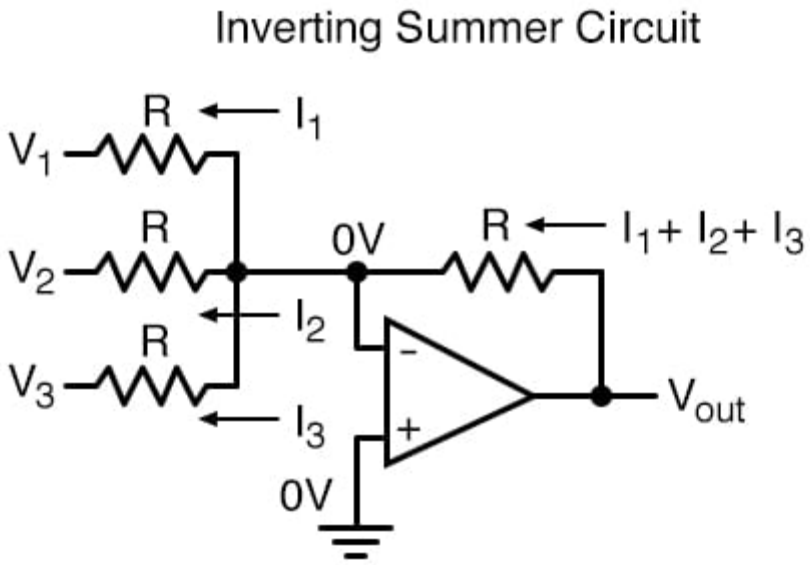

$$V_{out} = -(V_1 + V_2 + V_3)$$

For a simple inverting summing circuit, all resistors must be of equal value. If any of the input resistors were different, the input voltages would have different degrees of effect on the output, and the output voltage would not be a true sum.

2.Example: An R/2nR DAC with Multiple Input Resistor Values

Let's consider, however, intentionally setting the input resistors at different values. Suppose we were to set the input resistor values at multiple powers of two: R, 2R, and 4R, instead of all the same value R:

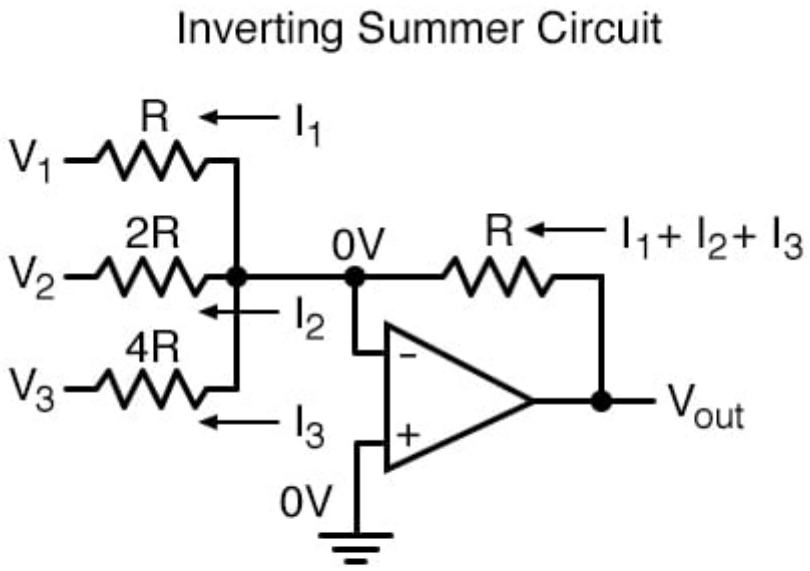

$$V_{out} = -(V_1 + \frac{V_2}{2} + \frac{V_3}{2})$$

Starting from V_1 and going through V_3, this would give each input voltage exactly half the effect on the output as the voltage before it. In other words, input voltage V_1 has a 1:1 effect on the output voltage (gain of 1), while input voltage V_2 has half that much effect on the output (a gain of 1/2), and V_3 half of that (a gain of 1/4).

These ratios were not arbitrarily chosen: they are the same ratios corresponding to place weights in the binary numeration system. If we drive the inputs of this circuit with digital gates so that each input is either 0 volts or full supply voltage, the output voltage will be an analog representation of the binary value of these three bits.

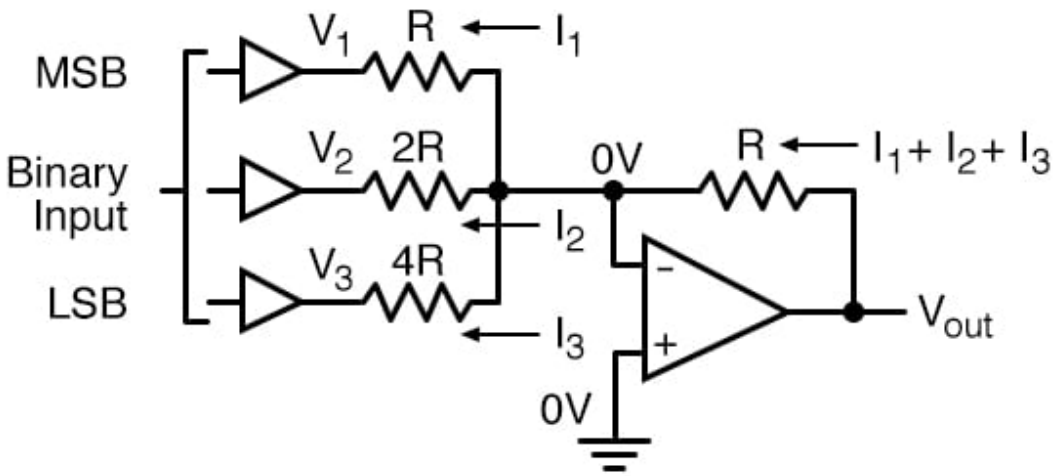

If we chart the output voltages for all eight combinations of binary bits (000 through 111) input to this circuit, we will get the following progression of voltages:

3.CIRCUIT DESIGN AND SIMULATION

- The schematic diagram of the 4-bit R–2R Ladder DAC is shown below:

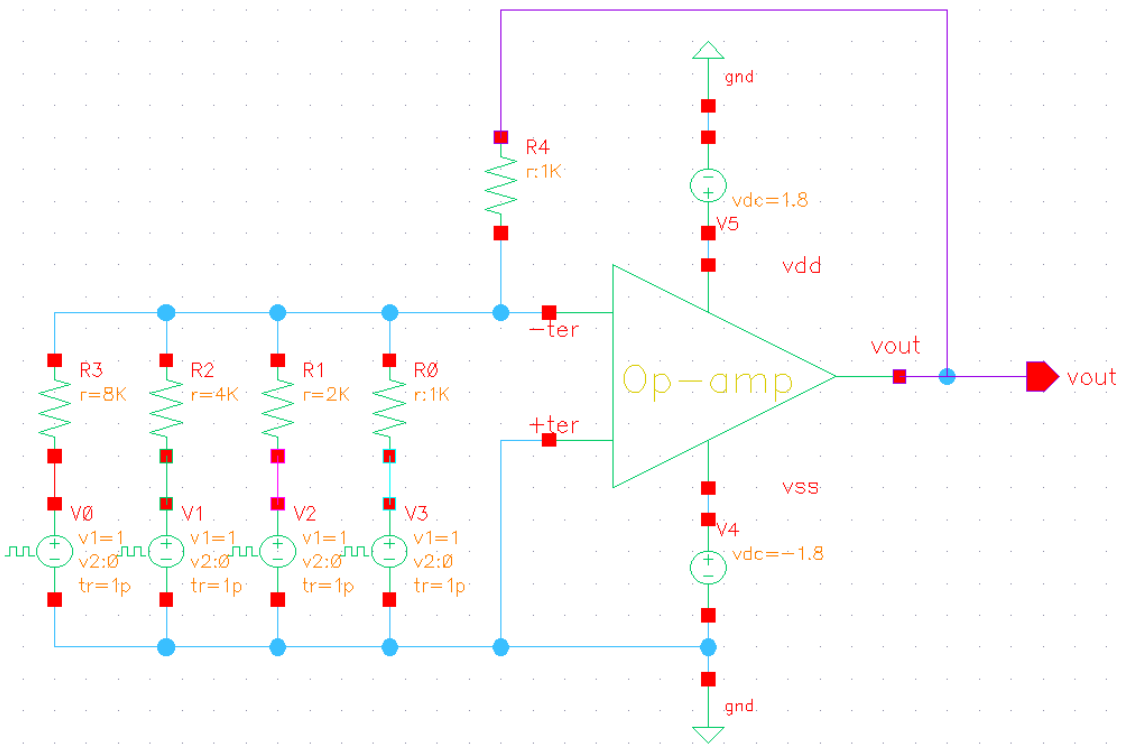

- The circuit consists of four input bits (V0–V3) connected through the R–2R resistor ladder.
- Each voltage source represents a digital input (0 or 1). The ladder sums the weighted voltages, and the operational amplifier in inverting configuration generates the analog output voltage proportional to the binary code.

4.TRANSIENT ANALYSIS AND WAVEFORMS

The transient response of the DAC circuit is shown below:

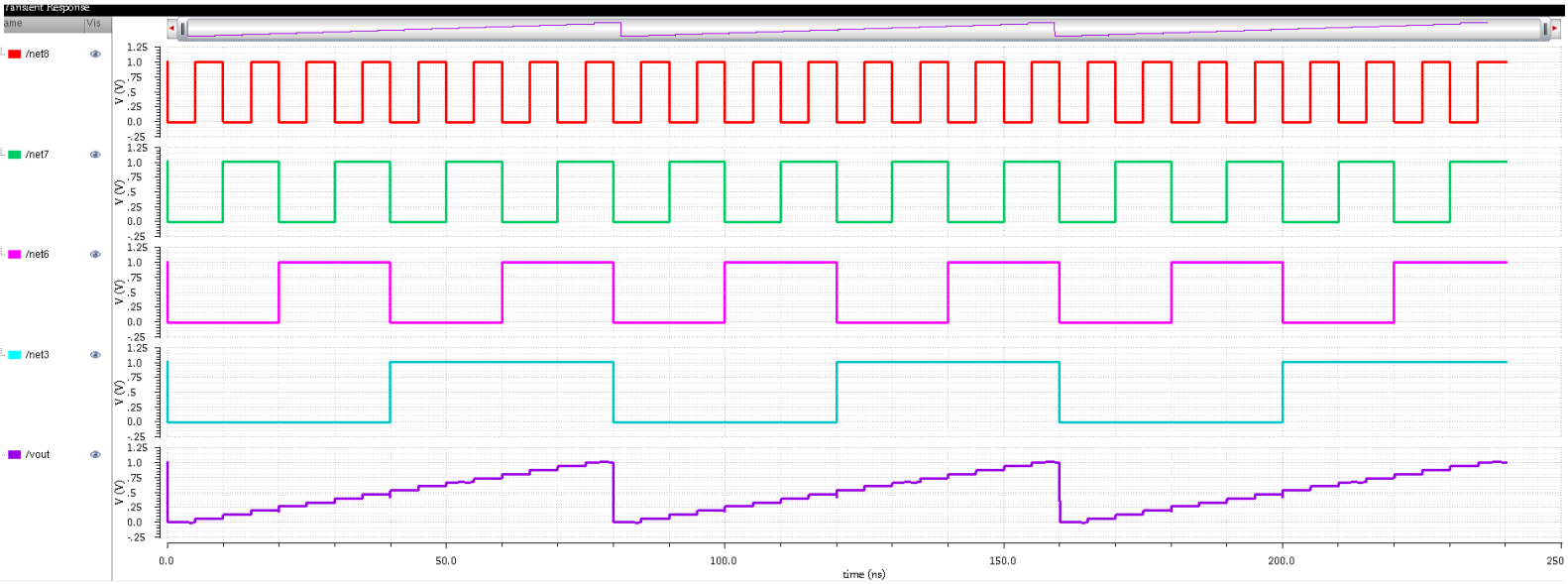

The waveform illustrates the digital input bits and the resulting analog output (Vout).The staircase-like output confirms successful digital-to-analog conversion, where each step corresponds to one binary input combination out of the 16 possible 4-bit inputs.The output increases proportionally as the digital input code increments from 0000 to 1111.

5.ANALYSIS AND RESULTS

For an n-bit R–2R ladder DAC, the output voltage is defined as:

$V_{out} = V_{ref} \times (D / 2^n)$

Binary Input (D3 D2 D1 D0)	**Decimal Value (D)**	**Theoretical Output (Vout = 1.8 × D / 16)**	**Simulated Output (Vout)**	**Error (mV)**
0000	0	0.000 V	0.000 V	0
0001	1	0.1125 V	0.110 V	-2.5
0010	2	0.225 V	0.224 V	-1.0
0011	3	0.3375 V	0.335 V	-2.5
0100	4	0.450 V	0.448 V	-2.0
0101	5	0.5625 V	0.561 V	-1.5
0110	6	0.675 V	0.673 V	-2.0
0111	7	0.7875 V	0.786 V	-1.5
1000	8	0.900 V	0.899 V	-1.0
1001	9	1.0125 V	1.010 V	-2.5
1010	10	1.125 V	1.122 V	-3.0
1011	11	1.2375 V	1.236 V	-1.5
1100	12	1.350 V	1.349 V	-1.0
1101	13	1.4625 V	1.460 V	-2.5
1110	14	1.575 V	1.573 V	-2.0
1111	15	1.6875 V	1.685 V	-2.5

Where:

V_{ref} = Reference voltage = 1.8 V

D = Decimal equivalent of binary input

n = Number of bits (4)

Step size = 1.8 / 16 = 0.1125 V

The simulation results align closely with theoretical values, showing a consistent step size of approximately 0.1125 V. Minor deviations arise due to non-ideal op-amp gain and parasitic effects.

6.Performance Summary Table

Parameter	**Symbol**	**Value**	**Unit / Remarks**
Supply Voltage	VDD	±1.8	V
Resolution	n	4	bits
Reference Voltage	Vref	1.8	V
Step Size	ΔV	0.1125	V
Output Range	-	0 – 1.6875	V
Number of Steps	2^n	16	-
Technology	-	90 nm CMOS	-
Power Dissipation	PD	0.15	mW (approx.)
Linearity Error	-	≤ 2	mV
Tool Used	-	Cadence Virtuoso	-

4. Conclusion

The design and analysis of the **4-bit R–2R Ladder Digital-to-Analog Converter (DAC)** using **90 nm CMOS technology** have been successfully completed using **Cadence Virtuoso**.
The objective of this project was to develop a DAC with **high linearity, low power consumption, and accurate digital-to-analog conversion** suitable for mixed-signal and embedded system applications. The simulation results obtained from the designed circuit confirm that the DAC meets the expected specifications and performs effectively within the desired operating range.

The **R–2R ladder topology** was chosen for its **simplicity, resistor matching capability, and scalability**. It efficiently converts 4-bit digital codes into precise analog voltage levels using only two resistor values (R and 2R), thus minimizing area and mismatch errors. Through proper resistor selection, biasing, and op-amp configuration, the DAC produced accurate stepwise output voltages with a uniform **step size of approximately 0.1125 V**, confirming theoretical predictions.

The circuit was designed systematically, beginning with theoretical calculations, followed by schematic simulation, transient analysis, and verification using Cadence Virtuoso. The simulated output staircase waveform closely matched the ideal response, demonstrating the effectiveness of the design methodology. The results also highlight the importance of resistor matching and op-amp characteristics in determining the overall accuracy and linearity of the DAC.

Overall, this project successfully demonstrates that the **R–2R Ladder DAC** can provide reliable and precise digital-to-analog conversion with **low power dissipation and compact implementation**.
The circuit's simplicity, stability, and accuracy make it suitable for use in **data converters, microcontroller interfacing, sensor systems, and audio applications**.
Future improvements can focus on **increasing resolution**, **reducing resistor mismatch**, and **scaling the design to advanced CMOS nodes** for enhanced speed and integration in high-performance mixed-signal systems.

5. Future Scope

5.1 Linearity Improvement

Future work can focus on improving the linearity of the DAC output by using precision resistor matching and laser trimming techniques. Mismatch in the R–2R resistor network causes non-linearity and step errors, which can be minimized by using common-centroid resistor layout, temperature-compensated resistors, and calibration algorithms. For higher resolutions, implementing segmented DAC architectures or thermometer coding can further enhance linearity without increasing area complexity.

5.2 Accuracy and Noise Optimization

The overall accuracy and noise performance of the DAC can be improved by using low-noise operational amplifiers and high-precision metal-film resistors. Techniques like op-amp offset cancellation, switching noise reduction, and supply decoupling help suppress voltage fluctuations. In CMOS implementation, layout-level shielding and substrate isolation are essential to reduce coupling noise and ensure stable analog output.

5.3 Power and Area Reduction

Low-power and compact DACs are vital for portable and embedded systems. Future enhancements may involve dynamic biasing or current-steering architectures to reduce static power consumption while maintaining conversion accuracy. Scaling the design to smaller CMOS technology nodes (65 nm or 45 nm) can further reduce power and silicon area while increasing operating speed.

5.4 Resolution and Speed Scalability

Although the present DAC design is 4-bit, the same architecture can be extended to 8-bit or 10-bit resolution for finer analog output precision. For high-speed applications (e.g., audio or RF), a current-steering DAC or segmented hybrid DAC can be used. These modifications enable the circuit to achieve higher update rates and maintain linearity at higher frequencies.

6. References

1. S. G. Zhong et al., “A 1.3V 12-bit 100-MHz Current-Steering DAC in 55nm Technology,” Journal of Physics: Conference Series, vol. 2585, 012005, 2023.
2. Ashok Kumar Adepu and Balaji Narayanam, “Design of a Segmented Current Steering DAC Using PMOS Cascode Current Source in UMC 65 nm Technology,” Indonesian J. of Electrical Engineering and Computer Science, vol. 39, no. 2, pp. 821–830, Aug. 2025.
3. Yuanhao Liu and Lan Dai, “Design of 1G/S 10-bit Current-Steering Analog-to-Digital Converter,” Journal of Physics: Conference Series, vol. 3046, 012004, 2025.
4. Jayeshkumar J. Patel and Amisha P. Naik, “Design and Implementation of 4-bit Binary Weighted Current Steering DAC,” International Journal of Electrical and Computer Engineering (IJECE), vol. 10, no. 6, pp. 5642–5649, Dec. 2020.
5. Xian Yang Lim et al., “Design and Analysis of a Novel 12-Bit Current-Steering–Capacitive DAC,” Journal of Low Power Electronics and Applications, vol. 15, no. 1, p. 9, Feb. 2025.
6. Suvarna Mujumdar, Sajad A. Loan, and Nelofer Afzal, “CNTFET-Based 4-bit Thermometer Current Steering DAC,” Analog Integrated Circuits and Signal Processing, vol. 114, pp. 241–251, 2023.
7. Shantanu Mehta et al., “Analysis and Design of a Tri-Level Current-Steering DAC with 12-bit Linearity and Improved Impedance Matching Suitable for CT-ADCs,” IEEE Open Journal of Circuits and Systems, vol. 2, 2020.
8. Smrutilekha Samanta and Santanu Sarkar, “An On-Chip Partial Self-Healing Calibration Technique for 10-Bit Reused Distributed Current-Steering DAC,” Analog Integrated Circuits and Signal Processing, vol. 113, pp. 353–360, 2022.
9. Norhamizah Idros et al., “A 65-nm CMOS 1 GS/s 45 mW Hybrid DAC with Digital Deglitch Mechanism Achieving 13.83 fJ/step FOM for 5G New Radio Sub-6 GHz Applications,” IEEE Access, vol. 12, 2024.
10. Yingchao Sun et al., “Modeling and Mitigating Output-Dependent Modulation in Current-Steering DAC Based on Differential-Quad Switching Scheme,” Electronics, vol. 13, no. 10, 2024.