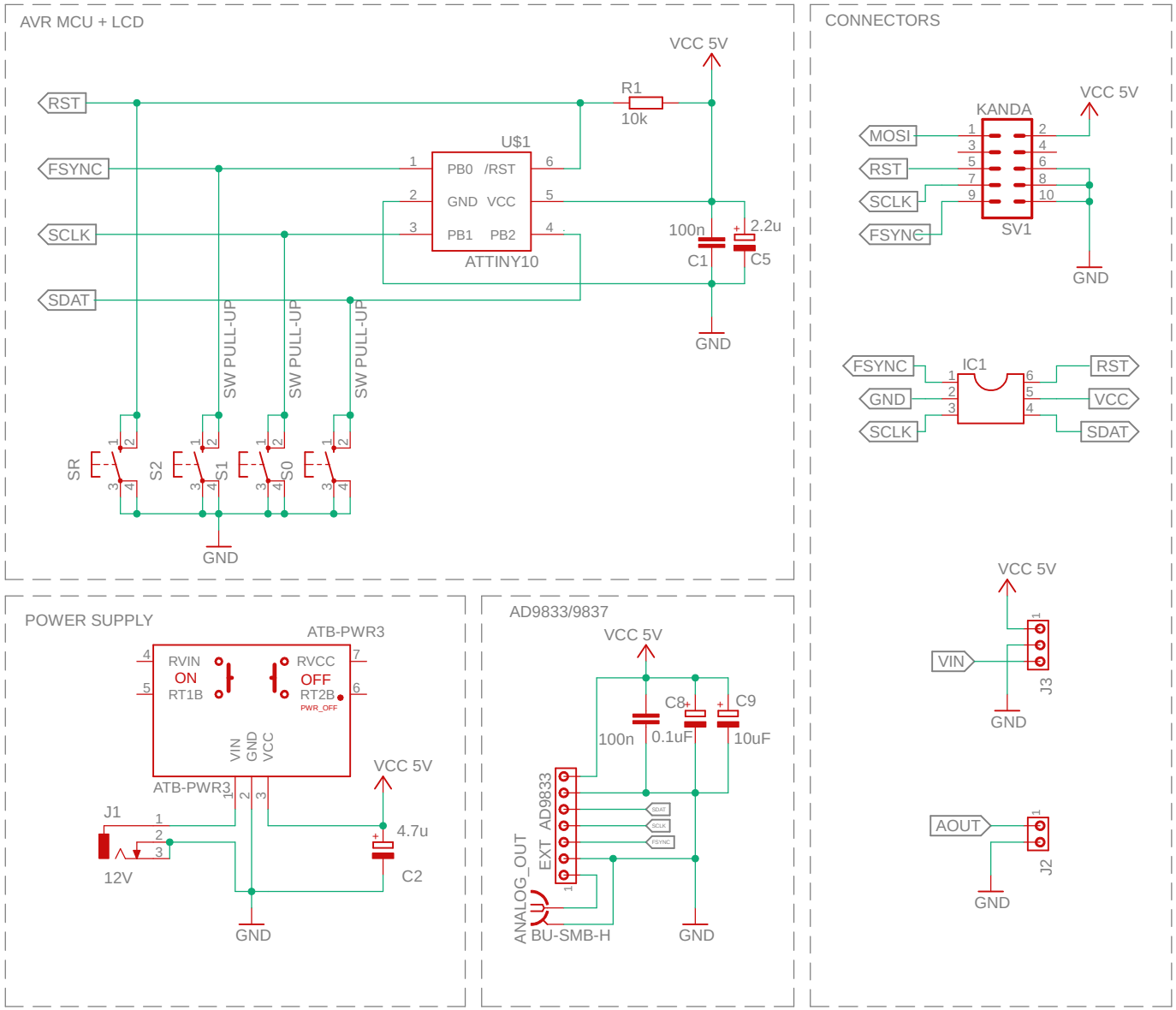

kmSigGenTiny v1.0.0