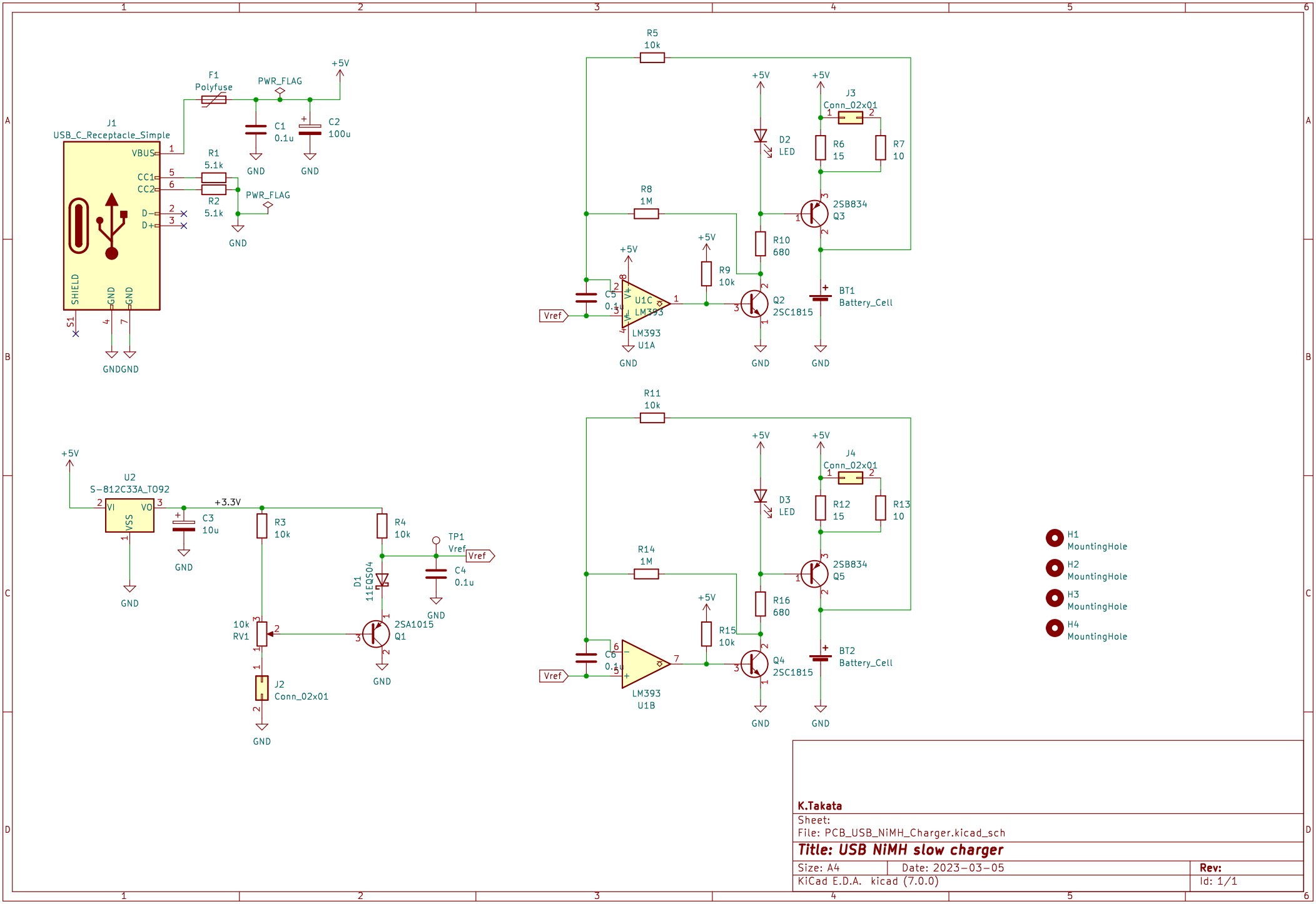

K.Takata

Sheet:

File: PCB_USB_NiMH_Charger.kicad_sch

Title: USB NiMH slow charger

Size: A4	Date: 2023-03-05	**Rev:**
KiCad E.D.A. kicad (7.0.0)		Id: 1/1