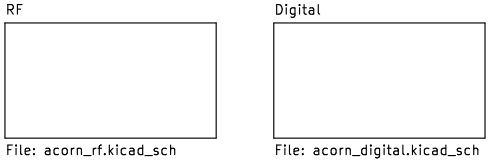
RF
File: acorn_rf.kicad_sch
Digital
File: acorn_digital.kicad_sch

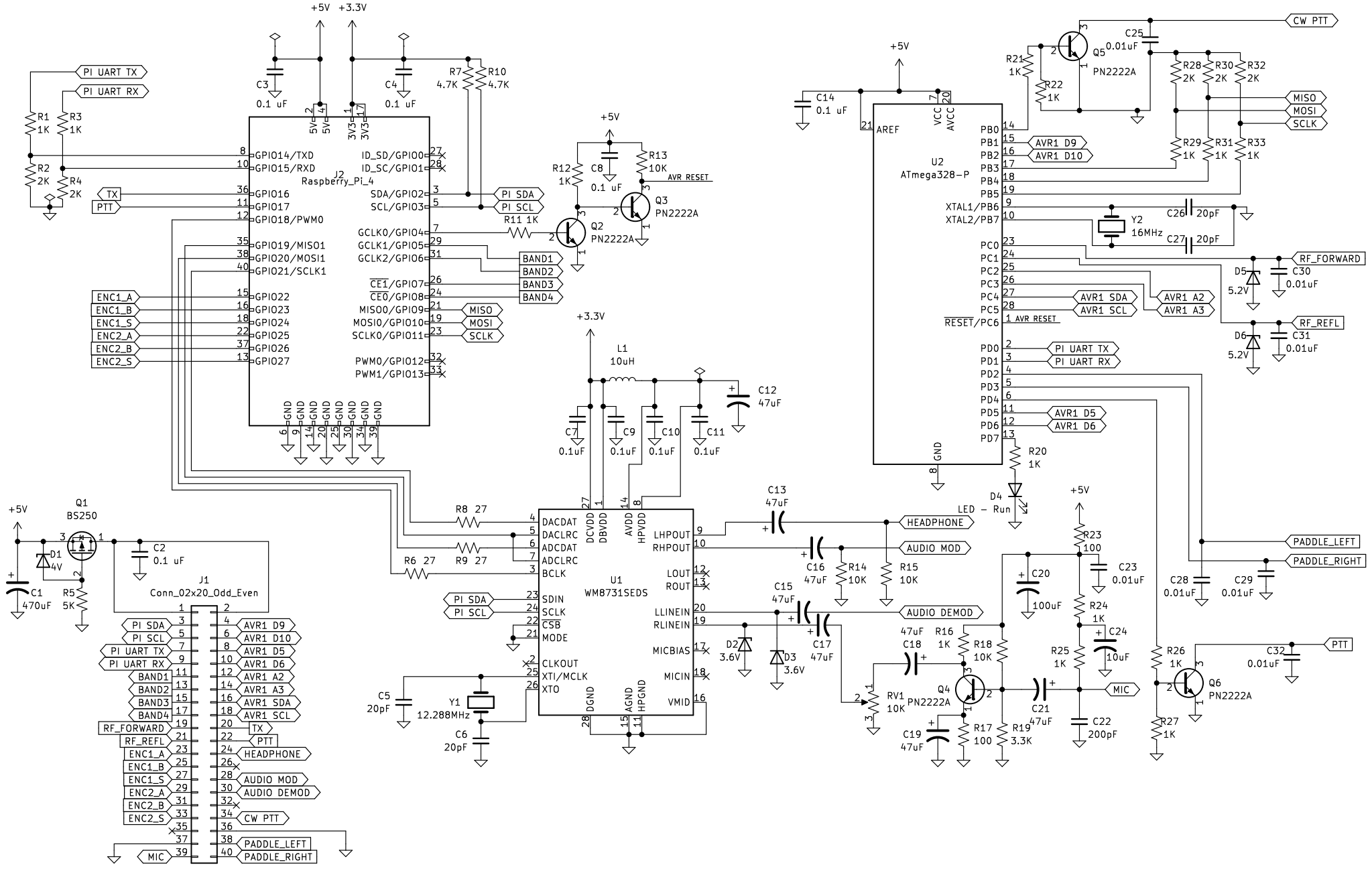

+5V
+3.3V
PI UART TX
PI UART RX
R1 1K
R3 1K
R2 2K
R4 2K
TX
PTT
C3 0.1 uF
C4 0.1 uF
R7 4.7K
R10 4.7K
J2
Raspberry_Pi_4
GPIO14/TXD
GPIO15/RXD
GPIO16
GPIO17
GPIO18/PWM0
GPIO19/MISO1
GPIO20/MOSI1
GPIO21/SCLK1
GPIO22
GPIO23
GPIO24
GPIO25
GPIO26
GPIO27
ID_SD/GPIO0
ID_SC/GPIO1
SDA/GPIO2
SCL/GPIO3
GCLK0/GPIO4
GCLK1/GPIO5
GCLK2/GPIO6
CE1/GPIO7
CE0/GPIO8
MISO0/GPIO9
MOSI0/GPIO10
SCLK0/GPIO11
PWM0/GPIO12
PWM1/GPIO13
PI SDA
PI SCL
BAND1
BAND2
BAND3
BAND4
MISO
MOSI
SCLK
ENC1_A
ENC1_B
ENC1_S
ENC2_A
ENC2_B
ENC2_S
R12 1K
C8 0.1 uF
R13 10K
AVR RESET
Q3 PN2222A
R11 1K
Q2 PN2222A
L1 10uH
C12 47uF
C7 0.1uF
C9 0.1uF
C10 0.1uF
C11 0.1uF
U1
WM8731SEDS
DACDAT
DACLRC
ADCDAT
ADCLRC
BCLK
SDIN
SCLK
CSB
MODE
CLKOUT
XTI/MCLK
XTO
DCVDD
DBVDD
AVDD
HPVDD
DGND
AGND
HPGND
LHPOUT
RHPOUT
LOUT
ROUT
LLINEIN
RLINEIN
MICBIAS
MICIN
VMID
R8 27
R9 27
R6 27
C5 20pF
Y1 12.288MHz
C6 20pF
Q1 BS250
D1 4V
C1 470uF
R5 5K
C2 0.1 uF
J1
Conn_02x20_Odd_Even
AVR1 D9
AVR1 D10
AVR1 D5
AVR1 D6
AVR1 A2
AVR1 A3
AVR1 SDA
AVR1 SCL
RF_FORWARD
RF_REFL
HEADPHONE
AUDIO MOD
AUDIO DEMOD
CW PTT
PADDLE_LEFT
PADDLE_RIGHT
MIC
C13 47uF
C16 47uF
R14 10K
R15 10K
C15 47uF
C17 47uF
D2 3.6V
D3 3.6V
C14 0.1 uF
U2
ATmega328-P
AREF
VCC
AVCC
PB0
PB1
PB2
PB3
PB4
PB5
XTAL1/PB6
XTAL2/PB7
PC0
PC1
PC2
PC3
PC4
PC5
RESET/PC6
PD0
PD1
PD2
PD3
PD4
PD5
PD6
PD7
GND
R20 1K
D4 LED - Run
R21 1K
R22 1K
Q5 PN2222A
C25 0.01uF
R28 2K
R30 2K
R32 2K
R29 1K
R31 1K
R33 1K
Y2 16MHz
C26 20pF
C27 20pF
D5 5.2V
C30 0.01uF
D6 5.2V
C31 0.01uF
C20 100uF
R23 100
C23 0.01uF
R24 1K
C24 10uF
R25 1K
C18 47uF
R16 1K
R18 10K
RV1 10K
Q4 PN2222A
C19 47uF
R17 100
R19 3.3K
C21 47uF
C22 200pF
R26 1K
R27 1K
Q6 PN2222A
C32 0.01uF
C28 0.01uF
C29 0.01uF