Qinglong Expander BMC Interface Specification

Revision: 0.3

10/27/2017

Proprietary Notice

This document contains proprietary and confidential information of Foxconn. All rights and titles hereto remain with Foxconn. The recipient shall keep this document in strict confidence and shall use this document in the manner and solely for purposes expressly agreed to by Foxconn. The recipient shall not disclose or allow access to this document, in whole or in part, by third parties, nor use it for the benefit of the recipient or third parties. The recipient shall not change this document in form and substance by any means, including without limitation, decompile, reproduce, revise, and amend.

Change History

Rev	Revised By	Change Description	Date
0.1	Michelle Wang	Primary Revision	2017-07-27
0.2	Michelle Wang	1.Add PSU command 2.Modify temperature command 3.Add HDD present information	2017-09-27
0.3	Michelle Wang	1.Add reset, disable and enable phy command 2.Add uplink phy status in command 0x0510	2017-10-27

We provide detail protocol format to run BMC functions via I2C interfaces. User can use I2C channel #8 of Expander to communicate with expander. Expander will fork an I2C thread task to accept I2C commands and reply status or result. The I2C slave address of expander1 is **0xBE** on **channel #8**, and expander2 I2C slave address is **0xBC** on channel #8.

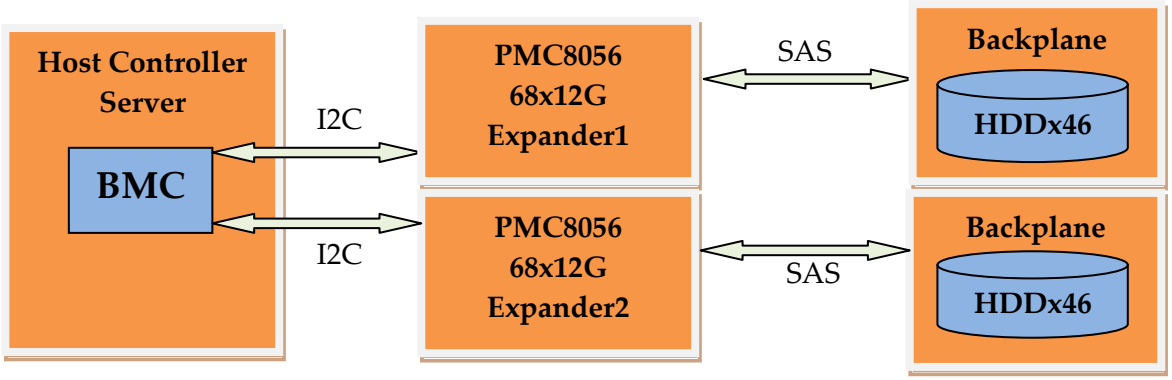

1. Summary of BMC commands

No	Command	Fun ID	Note
	General		
0	Get JBOD Enclosure Configuration	0x0000	
1	Get JBOD Enclosure Information	0x0010	
2	Reset	0x0020	
3	NDSR Reset	0x0021	
4	Get JBOD Diagnostic	0x0030	
	RTC		
5	Get RTC Time	0x0200	
6	Set RTC Time	0x0210	
	FRU		
7	Read FRU Data	0x0300	
8	Write FRU Data	0x0310	
	Temperature Sensor		
9	Get Temperature Sensor Test	0x0400	
	Disk		
10	Get Disk Error Count	0x0500	
11	Get Disk Status	0x0510	
	Log		
12	Get Expander Log	0x0600	
	Debug		
13	Get JBOD Diagnostic Take Time	0xD000	
14	Get BCT Configuration	0xD010	
15	Set BCT Configuration	0xD020	
16	Get Power Info	0xD030	
17	Get Drive Type Info	0xD040	
18	Read Drive Type Info	0xD050	
19	Get Fault Drive ID	0xD060	

20	Get Power Supply Status	0xD070	
21	Reset PHY	0xD080	
22	Disable PHY	0xD081	
23	Enable PHY	0xD082	

2. General Commands

2.1 Get JBOD Enclosure Configuration (0x0000)

Byte	Data Field
Request Data	
1	Checksum Byte A zero checksum of the data start from byte 2 to byte 3.
2~3	Function ID (0x0000)
4~16	Reserved (0x00)
Response Data	
1	Checksum Byte A zero checksum of the data start from byte 2 to byte 13.
2	Completion Code 0x00 Success 0x01 Fail 0x02 Device does not exist 0x03 Checksum error
3~6	Firmware Version
7	Number of Disks
8	Number of PSU
9	Number of Temperature sensors
10	Number of Voltage sensors
11	Number of Enclosure services controller electronics
12	Number of Enclosure
13	Number of Expanders
14	Number of SAS Connector

Note:

1. The field of "Checksum Byte" is not used for UART interface.
2. Byte 2: High byte of Function ID.
3. Byte 3: Low byte of Function ID.
4. Number of Disks.
5. Number of PSU.
6. Number of Temperature sensors.
7. Number of Voltage sensors.
8. Number of Enclosure services controller electronics.
9. Number of Enclosure.
10. Number of Expander.
11. Number of SAS Connector.

2.2 Get JBOD Enclosure Information (0x0010)

Byte	Data Field
Request Data	
1	Checksum Byte A zero checksum of the data start from byte 2 to byte 3.
2~3	Function ID (0x0010)
4~16	Reserved (0x00)
Response Data	
1	Checksum Byte A zero checksum of the data start from byte 2 to byte 11.
2	Completion Code 0x00 Success 0x01 Fail 0x02 Device does not exist 0x03 Checksum error
3	Expander GPIO ID (Left:0x0, Right:0x1)
4~11	Enclosure Logical ID (SAS Address) Byte 3 – MSB of SAS address. Byte 10 – LSB of SAS address.

Note:

1. The field of "Checksum Byte" is not used for UART interface.

2.3 Reset (0x0020)

Byte	Data Field
Request Data	
1	Checksum Byte A zero checksum of the data start from byte 2 to byte 3.
2~3	Function ID (0x0020)
4~16	Reserved (0x00)
Response Data	
1	Checksum Byte A zero checksum of the data start from byte 2.
2	Completion Code 0x00 Success 0x01 Fail 0x02 Device does not exist 0x03 Checksum error

2.4 NDSR Reset (0x0021)

Byte	Data Field
Request Data	
1	Checksum Byte A zero checksum of the data start from byte 2 to byte 3.
2~3	Function ID (0x0021)
4~16	Reserved (0x00)
Response Data	
1	Checksum Byte A zero checksum of the data start from byte 2.
2	Completion Code 0x00 Success 0x01 Fail 0x02 Device does not exist 0x03 Checksum error

2.4 Get JBOD Diagnostic (0x0030)

Byte	Data Field
Request Data	
1	Checksum Byte A zero checksum of the data start from byte 2 to byte 9.
2~3	Function ID (0x0030)
4	Transaction Type 0x00: Send Command Request 0x01: Get Command Result
5~16	Reserved (0x00)

Byte	Data Field
Response Data	
1	Checksum Byte A zero checksum of the data start from byte 2 to byte N.
2	Completion Code 0x00 Success 0x01 Fail 0x02 Device does not exist 0x03 Checksum error
3	Test Status 0x0: Not started 0x1: Test in progress 0x2: Test completed
4	Temperature Test Result 0x00 Pass 0x01 Fail
5	Hot-Swap Test Result 0x00 Pass 0x01 Fail
6	I2C to GPIO(Disk Present) Test Result 0x00 Pass 0x01 Fail
7	I2C to GPIO(Disk Power Ctrl) Test Result 0x00 Pass 0x01 Fail
8	RTC Test Result 0x00 Pass 0x01 Fail
9	EEPROM Test Result 0x00 Pass 0x01 Fail
10	Redriver Test Result 0x00 Pass 0x01 Fail
11	Disk Count for Loopback Test
12~N	[7:6] Loopback Test Result 0x0: Pass 0x1: Fail 0x2: No disk attached [5:0] Disk id

3. RTC Commands

3.1 Get RTC Time (0x0200)

Byte	Data Field
Request Data	
1	Checksum Byte A zero checksum of the data start from byte 2 to byte 4.
2~3	Function ID (0x0200)
4	Transaction Type 0x00: Send Command Request 0x01: Get Command Result 0x02: Direct Transaction Mode
5~16	Reserved (0x00)
Response Data	
1	Checksum Byte A zero checksum of the data start from byte 2 to byte 8.
2	Completion Code 0x00 Success 0x01 Fail 0x02 Device does not exist 0x03 Checksum error
3~8	Date and Time Byte3: Year (base: 2000) Byte4: Month Byte5: Day Byte6: Hour Byte7: Minute Byte8: Second

3.2 Set RTC Time (0x0210)

Byte	Data Field
Request Data	
1	Checksum Byte A zero checksum of the data start from byte 2 to byte 9.
2~3	Function ID (0x0210)
4	Transaction Type 0x00: Send Command Request 0x01: Get Command Result 0x02: Direct Transaction Mode
4~9	Date and Time Byte4: Year (base: 2000) Byte5: Month Byte6: Day Byte7: Hour Byte8: Minute Byte9: Second
10~16	Reserved (0x00)
Response Data	
1	Checksum Byte A zero checksum of the data start from byte 2 to byte 8.
2	Completion Code 0x00 Success 0x01 Fail 0x02 Device does not exist 0x03 Checksum error

4. FRU Commands

4.1 Read FRU Data (0x0300)

Byte	Data Field
Request Data	
1	Checksum Byte A zero checksum of the data start from byte 2 to byte 7.
2~3	Function ID (0x0300)
4	Transaction Type 0x00: Send Command Request 0x01: Get Command Result 0x02: Direct Transaction Mode
5~6	Offset to read
7	Count to read
8~16	Reserved (0x00)
Response Data	
1	Checksum Byte A zero checksum of the data start from byte 2 to byte N.
2	Completion Code 0x00 Success 0x01 Fail 0x02 Device does not exist 0x03 Checksum error
3	Count returned
4~N	Requested Data

Note:

1. Byte 5: High byte of Offset.
2. Byte 6: Low byte of Offset.

4.2 Write FRU Data (0x0310)

Byte	Data Field
Request Data	
1	Checksum Byte A zero checksum of the data start from byte 2 to byte N. (Max:16)
2~3	Function ID (0x0310)
4	Transaction Type 0x00: Send Command Request 0x01: Get Command Result 0x02: Direct Transaction Mode
5~6	Offset to write
7	Count to write
8~N	Data
N~16	Reserved (0x00)
Response Data	
1	Checksum Byte A zero checksum of the data start from byte 2 to byte 3.
2	Completion Code 0x00 Success 0x01 Fail 0x02 Device does not exist 0x03 Checksum error
3	Count written

Note:

1. Byte 5: High byte of Offset.
2. Byte 6: Low byte of Offset.

5. Temperature Sensor Commands

5.1 Get Temperature Sensor Status (0x0400)

Byte	Data Field
Request Data	
1	Checksum Byte A zero checksum of the data start from byte 2 to byte 5.
2~3	Function ID (0x0400)
4	Transaction Type 0x00: Send Command Request 0x01: Get Command Result 0x02: Direct Transaction Mode
5	The index of temperature sensor 0x00: EEB thermal sensor 0x01: on-die temperature 0x02: BP1 thermal sensor 0x03: EEB thermal sensor on peer expander 0x10: on-die temperature on peer expander 0x11: BP1 thermal sensor on peer expander 0xFF: All thermal sensors (by above order)
6~16	Reserved (0x00)
Response Data	
1	Checksum Byte A zero checksum of the data start from byte 2 to byte N.
2	Completion Code 0x00 Success 0x01 Fail 0x02 Device does not exist 0x03 Checksum error 0x04 Still in process
3	The index of temperature sensor.(same as request)
4~N	Temperature values for one or all thermal sensors depend on ' The index of temperature sensor value. (If the value is 0x00 , means thermal sensor has fault problem)

6. DISK Commands

6.1 Get Disk Error Count (0x0500)

Byte	Data Field
Request Data	
1	Checksum Byte A zero checksum of the data start from byte 2 to byte 6.
2~3	Function ID (0x0500)
4	Transaction Type 0x00: Send Command Request 0x01: Get Command Result 0x02: Direct Transaction Mode
5	Disk id
6	Clear error count. This will clear error counts for all disks. 0x0: Do not clear error counts after reading 0x1: Clear error counts after reading
7~16	Reserved (0x00)
Response Data	
1	Checksum Byte A zero checksum of the data start from byte 2 to byte 20.
2	Completion Code 0x00 Success 0x01 Fail 0x02 Device does not exist 0x03 Checksum error 0x04 Still in process
3	Disk id(same as request)
4	Expander PHY id connected to this disk
5~8	Invalid DWORD count
9~12	Disparity Error Count
13~16	Loss of Sync Count
17~20	Reset Sequence Fail Count

6.2 Get Disk Status (0x0510)

Byte	Data Field
Request Data	
1	Checksum Byte A zero checksum of the data start from byte 2 to byte 4.
2~3	Function ID (0x0510)
4	Transaction Type 0x00: Send Command Request 0x01: Get Command Result 0x02: Direct Transaction Mode
5~16	Reserved (0x00)
Response Data	
1	Checksum Byte A zero checksum of the data start from byte 2 to byte N.
2	Completion Code 0x00 Success 0x01 Fail 0x02 Device does not exist 0x03 Checksum error 0x04 Still in process
3	Disk Count(N)
4	Disk ID
5	[7:4] Disk status 0x0: Failed 0x1: Ready [3:0] Link Speed 0x0: 1.5G 0x1: 3.0G 0x2: 6.0G 0x3: 12.0G 0x4: 0.0G
6~N	Disk ID and Disk status for other disks
N+1	Uplink Phy 46

N+2	[7:4] Phy status 0x0: Failed 0x1: Ready [3:0] Link Speed 0x0: 1.5G 0x1: 3.0G 0x2: 6.0G 0x3: 12.0G 0x4: 0.0G
N+3~ N+16	Phy ID and Phy status for other uplink phys(47~53)

7. LOG Commands

7.1 Get Expander Log (0x0600)

Byte	Data Field
Request Data	
1	Checksum Byte A zero checksum of the data start from byte 2 to byte 7.
2~3	Function ID (0x0600)
4	Transaction Type 0x00: Send Command Request 0x01: Get Command Result 0x02: Direct Transaction Mode
5	Action 0x0: Read log 0x1: Clear all log
6~7	Log Record ID 0x0000: Get first log 0xFFFF: Get last log
8~16	Reserved (0x00)
Response Data	
1	Checksum Byte A zero checksum of the data start from byte 2 to byte 8.
2	Completion Code 0x00 Success 0x01 Fail 0x02 Device does not exist 0x03 Checksum error 0x04 Log does not exist
3~4	Next log record ID
5	Event type
6~7	Event code
8	Element ID

Event Code	Event Description
Event Type: Wide Port(0x01)	
0x0100	Wide Port [Element ID] Plug-In.
0x0101	Wide Port [Element ID] Plug-Out.
Event Type: Disk(0x02)	
0x0200	Disk [Element ID] Plug-In.
0x0201	Disk [Element ID] Plug-Out.
Event Type: Temperature(0x03)	
0x0300	Temperature [Element ID] Turn To NORMAL.
0x0301	Temperature [Element ID] Low WARNING.
0x0302	Temperature [Element ID] Low CRICITAL.
0x0303	Temperature [Element ID] High WARNING.
0x0304	Temperature [Element ID] High CRICITAL.
Event Type: Hot-Swap(0x04)	
0x0400	Voltage [Element ID] Ein Turn To NORMAL.
0x0401	Voltage [Element ID] Ein Low CRICITAL.
0x0402	Voltage [Element ID] Ein High CRICITAL.
0x0403	Voltage [Element ID] Vin Turn To NORMAL.
0x0404	Voltage [Element ID] Vin Low CRICITAL.
0x0405	Voltage [Element ID] Vin High CRICITAL.
0x0406	Voltage [Element ID] Iin Turn To NORMAL.
0x0407	Voltage [Element ID] Iin Low CRICITAL.
0x0408	Voltage [Element ID] Iin High CRICITAL.
0x0409	Voltage [Element ID] Vout Turn To NORMAL.
0x040A	Voltage [Element ID] Vout Low CRICITAL.
0x040B	Voltage [Element ID] Vout High CRICITAL.
0x040C	Voltage [Element ID] Pin Turn To NORMAL.
0x040D	Voltage [Element ID] Pin Low CRICITAL.
0x040E	Voltage [Element ID] Pin High CRICITAL.
0x040F	Voltage [Element ID] MFR Pin Turn To NORMAL.
0x0410	Voltage [Element ID] MFR Pin Low CRICITAL.
0x0411	Voltage [Element ID] MFR Pin High CRICITAL.

8. DEBUG Commands

8.1 Get JBOD Diagnostic Take Time (0xD000)

Byte	Data Field
Request Data	
1	Checksum Byte A zero checksum of the data start from byte 2 to byte 4.
2~3	Function ID (0xD000)
4	Transaction Type 0x00: Send Command Request 0x01: Get Command Result 0x02: Direct Transaction Mode
5~16	Reserved (0x00)
Response Data	
1	Checksum Byte A zero checksum of the data start from byte 2 to byte 5.
2	Completion Code 0x00 Success 0x01 Fail 0x02 Device does not exist 0x03 Checksum error
3	Test Status 0x0: Not started 0x1: Test in progress 0x2: Test completed
4~5	Total Time (s) Byte 4: High byte. Byte 5: Low byte.

8.2 Get BCT Configuration (0xD010)

Byte	Data Field
Request Data	
1	Checksum Byte A zero checksum of the data start from byte 2 to byte 5.
2~3	Function ID (0xD010)
4	Transaction Type 0x00: Send Command Request 0x01: Get Command Result 0x02: Direct Transaction Mode
5	Logical Phy Id
6~16	Reserved (0x00)
Response Data	
1	Checksum Byte A zero checksum of the data start from byte 2 to byte 7.
2	Completion Code 0x00 Success 0x01 Fail 0x02 Device does not exist 0x03 Checksum error
3	Logical Phy Id (same as request)
4	BCT Status 0x0: Disable 0x1: Enable
5~7	Non-BCT TX C1/C2/C3 C1 and C3 are Negative numbers

Note:

1. For example, if we get C1 (Byte5) =”2”. It means C1 =”-2”.

8.3 Set BCT Configuration (0xD020)

Byte	Data Field
Request Data	
1	Checksum Byte A zero checksum of the data start from byte 2 to byte 9.
2~3	Function ID (0xD020)
4	Transaction Type 0x00: Send Command Request 0x01: Get Command Result 0x02: Direct Transaction Mode
5	Logical Phy Id
6	BCT Status 0x00: Disable 0x01: Enable 0xFF: Default
7~9	Non-BCT TX C1/C2/C3 C1 and C3 are Negative numbers 0xFF: Default
10~16	Reserved (0x00)
Response Data	
1	Checksum Byte A zero checksum of the data start from byte 2.
2	Completion Code 0x00 Success 0x01 Fail 0x02 Device does not exist 0x03 Checksum error

Note:

1. For example, if we set C1 (Byte5) =”2”. It means C1 =”-2”.

8.4 Get Power Info (0xD030)

Byte	Data Field
Request Data	
1	Checksum Byte A zero checksum of the data start from byte 2 to byte 9.
2~3	Function ID (0xD030)
4	Transaction Type 0x00: Send Command Request 0x01: Get Command Result 0x02: Direct Transaction Mode
5~16	Reserved (0x00)
Response Data	
1	Checksum Byte A zero checksum of the data start from byte 2 to byte 13.
2	Completion Code 0x00 Success 0x01 Fail 0x02 Device does not exist 0x03 Checksum error
3~10	Pin Value Byte3~Byte6 are integer. Byte7~Byte10 are decimal fraction.
11	STATUS_IOUT(7Bh) BIT 7 : 1 A Output Over-current Fault has occurred 0 No fault or warning
12~13	READ_DIAGNOSTIC_WORD (E1h) BIT 0 : 1 A Circuit Breaker Fault has occurred 0 No fault or warning detected. BIT 2 : 1 A Over-temperature Fault has occurred 0 No fault or warning detected. BIT 3 : 1 A Input Over-current Fault or PFET OP Fault has occurred. 0 No fault or warning detected. BIT 8 : 1 A Damaged MOSFET has been detected 0 No fault or warning detected. BIT 10 : 1 A Over-temperature Warning has occurred. 0 No fault or warning detected.

8.5 Get Drive 0 Type Info (0xD040)

Byte	Data Field
Request Data	
1	Checksum Byte A zero checksum of the data start from byte 2 to byte 4
2~3	Function ID(0xD040)
4	Transaction Type 0x00: Send Command Request 0x01: Get Command Result 0x02: Direct Transaction Mode
5~16	Reserved (0x00)
Response Data	
1	Checksum Byte A zero checksum of the data start from byte 2
2	Completion Code 0x00 Success 0x01 Fail 0x02 Device does not exist 0x03 Checksum error

8.6 Read Drive 0 Type Info (0xD050)

Byte	Data Field
Request Data	
1	Checksum Byte A zero checksum of the data start from byte 2 to byte 4
2~3	Function ID(0xD050)
4	Transaction Type 0x00: Send Command Request 0x01: Get Command Result 0x02: Direct Transaction Mode
5~16	Reserved (0x00)
Response Data	
1	Checksum Byte A zero checksum of the data start from byte 2 to byte 3
2	Completion Code 0x00 Success

	0x01 Fail 0x02 Device does not exist 0x03 Checksum error
3	Drive Type 0x01: HGST 0x10: SEAGATE 0x11: Others

8.7 Get Fault Drive ID (0xD060)

Byte	Data Field
Request Data	
1	Checksum Byte A zero checksum of the data start from byte 2 to byte 4
2~3	Function ID(0xD060)
4	Transaction Type 0x00: Send Command Request 0x01: Get Command Result 0x02: Direct Transaction Mode
5~16	Reserved (0x00)
Response Data	
1	Checksum Byte A zero checksum of the data start from byte 2 to byte 8
2	Completion Code 0x00 Success 0x01 Fail 0x02 Device does not exist 0x03 Checksum error
3	[7:0]Drive0-7 Status 0x0: OK 0x1: FAULT
4	[7:0]Drive8-15 Status 0x0: OK 0x1: FAULT
5	[7:0]Drive16-23 Status 0x0: OK 0x1: FAULT
6	[7:0]Drive24-31 Status 0x0: OK 0x1: FAULT
7	[7:0]Drive32-39 Status 0x0: OK

	0x1: FAULT
8	[7:0]Drive40-47 Status 0x0: OK 0x1: FAULT
9	[7:0]Drive48-55 Status 0x0: OK 0x1: FAULT
10	[7:0]Drive0-7 Status 0x0: Not Present 0x1: Present
11	[7:0]Drive8-15 Status 0x0: Not Present 0x1: Present
12	[7:0]Drive16-23 Status 0x0: Not Present 0x1: Present
13	[7:0]Drive24-31 Status 0x0: Not Present 0x1: Present
14	[7:0]Drive32-39 Status 0x0: Not Present 0x1: Present
15	[7:0]Drive40-47 Status 0x0: Not Present 0x1: Present

8.8 Get Power Supply Status (0xD070)

Byte	Data Field
Request Data	
1	Checksum Byte A zero checksum of the data start from byte 2 to byte 4
2~3	Function ID(0xD070)
4	Transaction Type 0x00: Send Command Request 0x01: Get Command Result 0x02: Direct Transaction Mode
5~8	5~6:Power1(watt) 7~8:Power2(watt)
9~10	9:Power1 Bit 0: Present Bit1: DC OK Bit 2: AC OK

	Bit 3: Power GOOD 10:Power2 Bit 0: Present Bit1: DC OK Bit 2: AC OK Bit 3: Power GOOD
11~12	11:Power1 Bit 0: OC Bit 1: OV Bit 2: OT Bit 3: Reserved 12:Power2 Bit 0: OC Bit 1: OV Bit 2: OT Bit 3: Reserved
13~16	Reserved (0x00)
Response Data	
1	Checksum Byte A zero checksum of the data start from byte 2 to byte 8
2	Completion Code 0x00 Success 0x01 Fail 0x02 Device does not exist 0x03 Checksum error

Note:
1. Byte 5: Low byte of Power(watt).
2. Byte 6: High byte of Power(watt).
3. Byte 7: Low byte of Power(watt).
4. Byte 8: High byte of Power(watt).

8.9 Reset PHY (0xD080)

Byte	Data Field
Request Data	
1	Checksum Byte A zero checksum of the data start from byte 2 to byte 4
2~3	Function ID(0xD080)
4	Transaction Type 0x00: Send Command Request 0x01: Get Command Result 0x02: Direct Transaction Mode
5	Logical PHY id 0xFF: All phys(0~53) 0x00: Logical phy 0 … … 0x35:Logical phy 53 0x36: All downstream phy 0x37: All upstream phy
6~16	Reserved (0x00)
Response Data	
1	Checksum Byte A zero checksum of the data start from byte 2 to byte 8
2	Completion Code 0x00 Success 0x01 Fail 0x02 Device does not exist 0x03 Checksum error

8.10 Disable PHY (0xD081)

Byte	Data Field
Request Data	
1	Checksum Byte A zero checksum of the data start from byte 2 to byte 4
2~3	Function ID(0xD081)
4	Transaction Type 0x00: Send Command Request 0x01: Get Command Result 0x02: Direct Transaction Mode
5	Logical PHY id

	0xFF: All phys(0~53) 0x00: Logical phy 0 … … 0x35:Logical phy 53 0x36: All downstream phy 0x37: All upstream phy
6~16	Reserved (0x00)
Response Data	
1	Checksum Byte A zero checksum of the data start from byte 2 to byte 8
2	Completion Code 0x00 Success 0x01 Fail 0x02 Device does not exist 0x03 Checksum error

8.11 Enable PHY (0xD082)

Byte	Data Field
Request Data	
1	Checksum Byte A zero checksum of the data start from byte 2 to byte 4
2~3	Function ID(0xD082)
4	Transaction Type 0x00: Send Command Request 0x01: Get Command Result 0x02: Direct Transaction Mode
5	Logical PHY id 0xFF: All phys(0~53) 0x00: Logical phy 0 … … 0x35:Logical phy 53 0x36: All downstream phy 0x37: All upstream phy
5~16	Reserved (0x00)
Response Data	
1	Checksum Byte A zero checksum of the data start from byte 2 to byte 8
2	Completion Code 0x00 Success 0x01 Fail

	0x02 Device does not exist 0x03 Checksum error