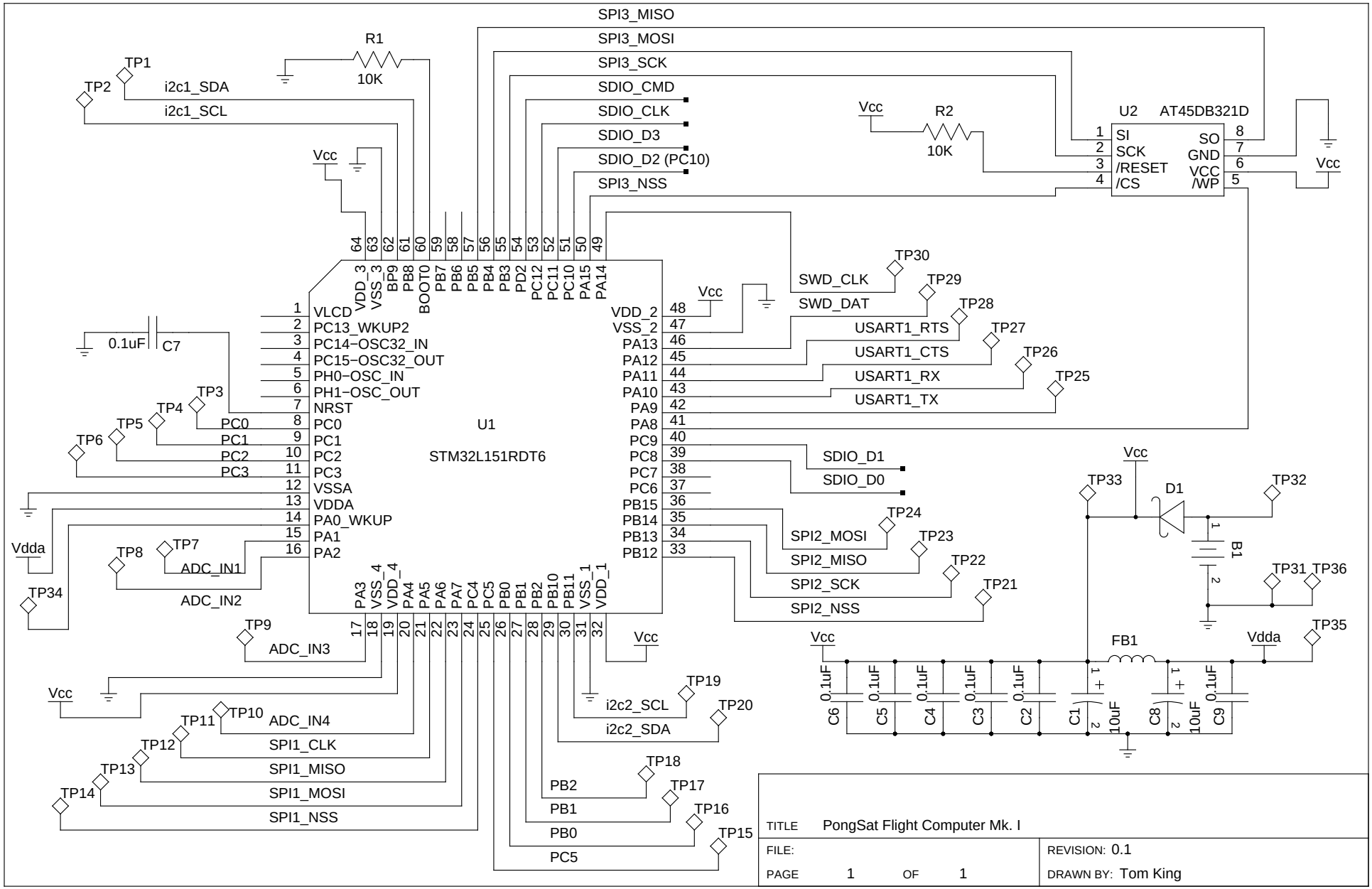
U1
STM32L151RDT6
U2
AT45DB321D
R1
10K
R2
10K
C7
0.1uF
D1
B1
FB1
C1
10uF
C8
10uF
C2
C3
C4
C5
C6
C9
0.1uF
SPI3_MISO
SPI3_MOSI
SPI3_SCK
SDIO_CMD
SDIO_CLK
SDIO_D3
SDIO_D2 (PC10)
SPI3_NSS
i2c1_SDA
i2c1_SCL
SWD_CLK
SWD_DAT
USART1_RTS
USART1_CTS
USART1_RX
USART1_TX
SDIO_D1
SDIO_D0
SPI2_MOSI
SPI2_MISO
SPI2_SCK
SPI2_NSS
i2c2_SCL
i2c2_SDA
ADC_IN1
ADC_IN2
ADC_IN3
ADC_IN4
SPI1_CLK
SPI1_MISO
SPI1_MOSI
SPI1_NSS
PB2
PB1
PB0
PC5
PC0
PC1
PC2
PC3
Vcc
Vdda
TITLE PongSat Flight Computer Mk. I
FILE:
PAGE 1 OF 1
REVISION: 0.1
DRAWN BY: Tom King