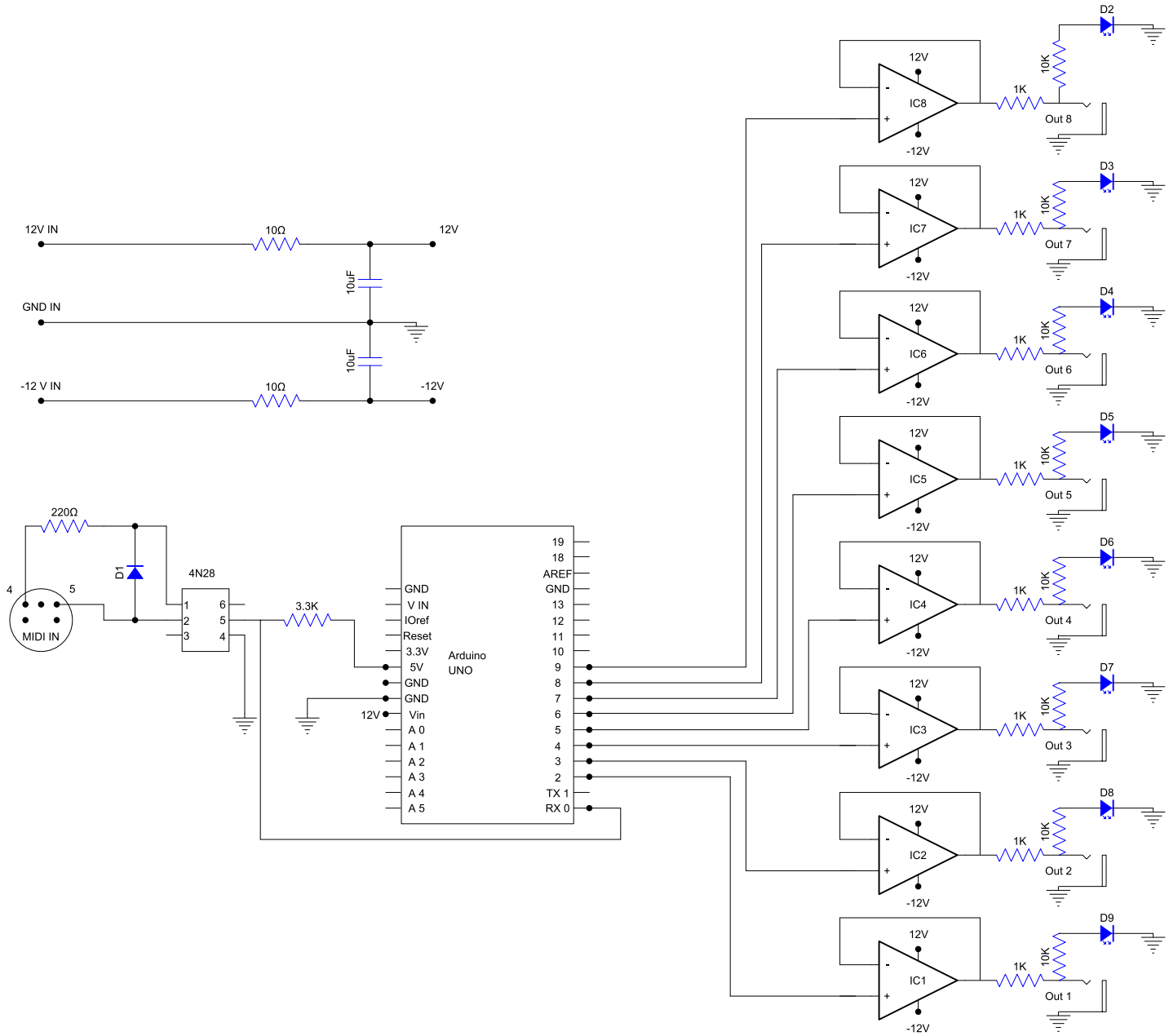
12V IN
10Ω
12V
10uF
GND IN
10uF
-12 V IN
10Ω
-12V
220Ω
D1
4N28
4
5
MIDI IN
1
2
3
6
5
4
3.3K
GND
V IN
IOref
Reset
3.3V
5V
GND
GND
12V
Vin
A 0
A 1
A 2
A 3
A 4
A 5
Arduino
UNO
19
18
AREF
GND
13
12
11
10
9
8
7
6
5
4
3
2
TX 1
RX 0
12V
IC8
-12V
1K
10K
D2
Out 8
12V
IC7
-12V
1K
10K
D3
Out 7
12V
IC6
-12V
1K
10K
D4
Out 6
12V
IC5
-12V
1K
10K
D5
Out 5
12V
IC4
-12V
1K
10K
D6
Out 4
12V
IC3
-12V
1K
10K
D7
Out 3
12V
IC2
-12V
1K
10K
D8
Out 2
12V
IC1
-12V
1K
10K
D9
Out 1