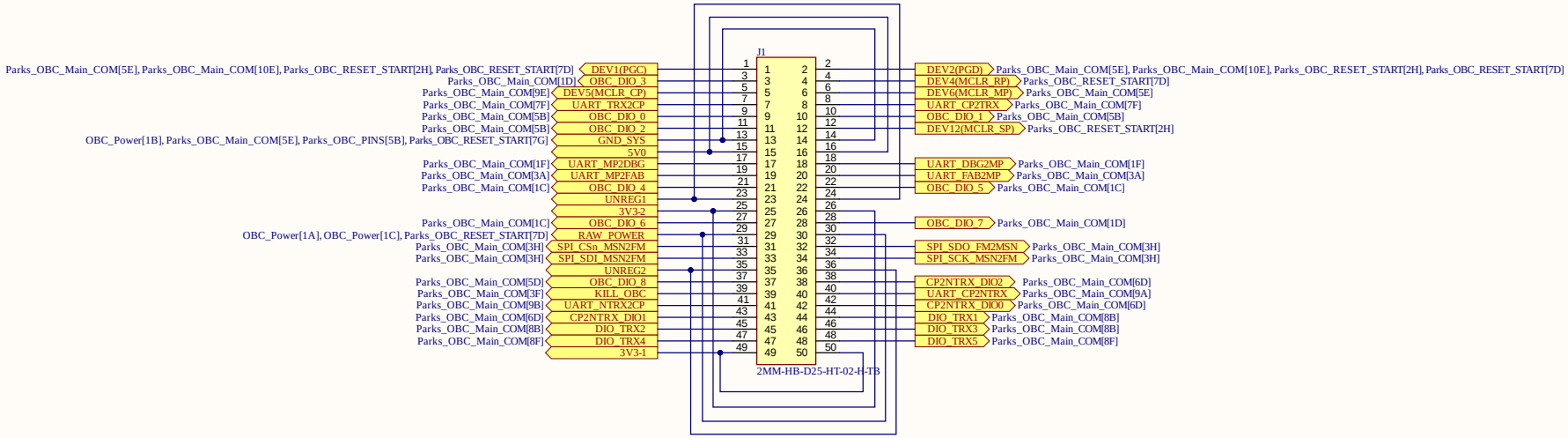
J1
2MM-HB-D25-HT-02-H-TB
Parks_OBC_Main_COM[5E], Parks_OBC_Main_COM[10E], Parks_OBC_RESET_START[2H], Parks_OBC_RESET_START[7D]
DEV1(PGC)
Parks_OBC_Main_COM[1D]
OBC_DIO_3
Parks_OBC_Main_COM[9E]
DEV5(MCLR_CP)
Parks_OBC_Main_COM[7F]
UART_TRX2CP
Parks_OBC_Main_COM[5B]
OBC_DIO_0
Parks_OBC_Main_COM[5B]
OBC_DIO_2
OBC_Power[1B], Parks_OBC_Main_COM[5E], Parks_OBC_PINS[5B], Parks_OBC_RESET_START[7G]
GND_SYS
5V0
Parks_OBC_Main_COM[1F]
UART_MP2DBG
Parks_OBC_Main_COM[3A]
UART_MP2FAB
Parks_OBC_Main_COM[1C]
OBC_DIO_4
UNREG1
3V3-2
Parks_OBC_Main_COM[1C]
OBC_DIO_6
OBC_Power[1A], OBC_Power[1C], Parks_OBC_RESET_START[7D]
RAW_POWER
Parks_OBC_Main_COM[3H]
SPI_CSn_MSN2FM
Parks_OBC_Main_COM[3H]
SPI_SDI_MSN2FM
UNREG2
Parks_OBC_Main_COM[5D]
OBC_DIO_8
Parks_OBC_Main_COM[3F]
KILL_OBC
Parks_OBC_Main_COM[9B]
UART_NTRX2CP
Parks_OBC_Main_COM[6D]
CP2NTRX_DIO1
Parks_OBC_Main_COM[8B]
DIO_TRX2
Parks_OBC_Main_COM[8F]
DIO_TRX4
3V3-1
DEV2(PGD)
Parks_OBC_Main_COM[5E], Parks_OBC_Main_COM[10E], Parks_OBC_RESET_START[2H], Parks_OBC_RESET_START[7D]
DEV4(MCLR_RP)
Parks_OBC_RESET_START[7D]
DEV6(MCLR_MP)
Parks_OBC_Main_COM[5E]
UART_CP2TRX
Parks_OBC_Main_COM[7F]
OBC_DIO_1
Parks_OBC_Main_COM[5B]
DEV12(MCLR_SP)
Parks_OBC_RESET_START[2H]
UART_DBG2MP
Parks_OBC_Main_COM[1F]
UART_FAB2MP
Parks_OBC_Main_COM[3A]
OBC_DIO_5
Parks_OBC_Main_COM[1C]
OBC_DIO_7
Parks_OBC_Main_COM[1D]
SPI_SDO_FM2MSN
Parks_OBC_Main_COM[3H]
SPI_SCK_MSN2FM
Parks_OBC_Main_COM[3H]
CP2NTRX_DIO2
Parks_OBC_Main_COM[6D]
UART_CP2NTRX
Parks_OBC_Main_COM[9A]
CP2NTRX_DIO0
Parks_OBC_Main_COM[6D]
DIO_TRX1
Parks_OBC_Main_COM[8B]
DIO_TRX3
Parks_OBC_Main_COM[8B]
DIO_TRX5
Parks_OBC_Main_COM[8F]

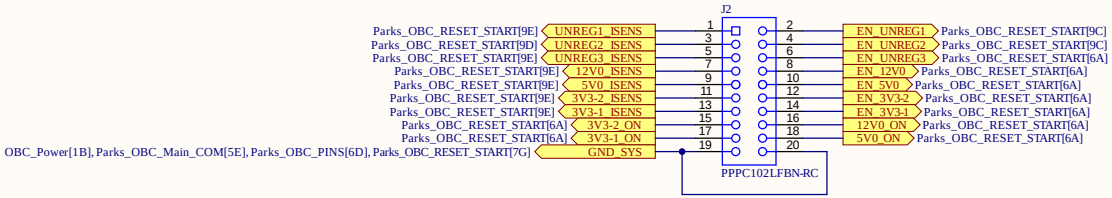
J2
PPPC102LFBN-RC
Parks_OBC_RESET_START[9E]
UNREG1_ISENS
Parks_OBC_RESET_START[9D]
UNREG2_ISENS
Parks_OBC_RESET_START[9E]
UNREG3_ISENS
Parks_OBC_RESET_START[9E]
12V0_ISENS
Parks_OBC_RESET_START[9E]
5V0_ISENS
Parks_OBC_RESET_START[9E]
3V3-2_ISENS
Parks_OBC_RESET_START[9E]
3V3-1_ISENS
Parks_OBC_RESET_START[6A]
3V3-2_ON
Parks_OBC_RESET_START[6A]
3V3-1_ON
OBC_Power[1B], Parks_OBC_Main_COM[5E], Parks_OBC_PINS[6D], Parks_OBC_RESET_START[7G]
GND_SYS
EN_UNREG1
Parks_OBC_RESET_START[9C]
EN_UNREG2
Parks_OBC_RESET_START[9C]
EN_UNREG3
Parks_OBC_RESET_START[6A]
EN_12V0
Parks_OBC_RESET_START[6A]
EN_5V0
Parks_OBC_RESET_START[6A]
EN_3V3-2
Parks_OBC_RESET_START[6A]
EN_3V3-1
Parks_OBC_RESET_START[6A]
12V0_ON
Parks_OBC_RESET_START[6A]
5V0_ON
Parks_OBC_RESET_START[6A]

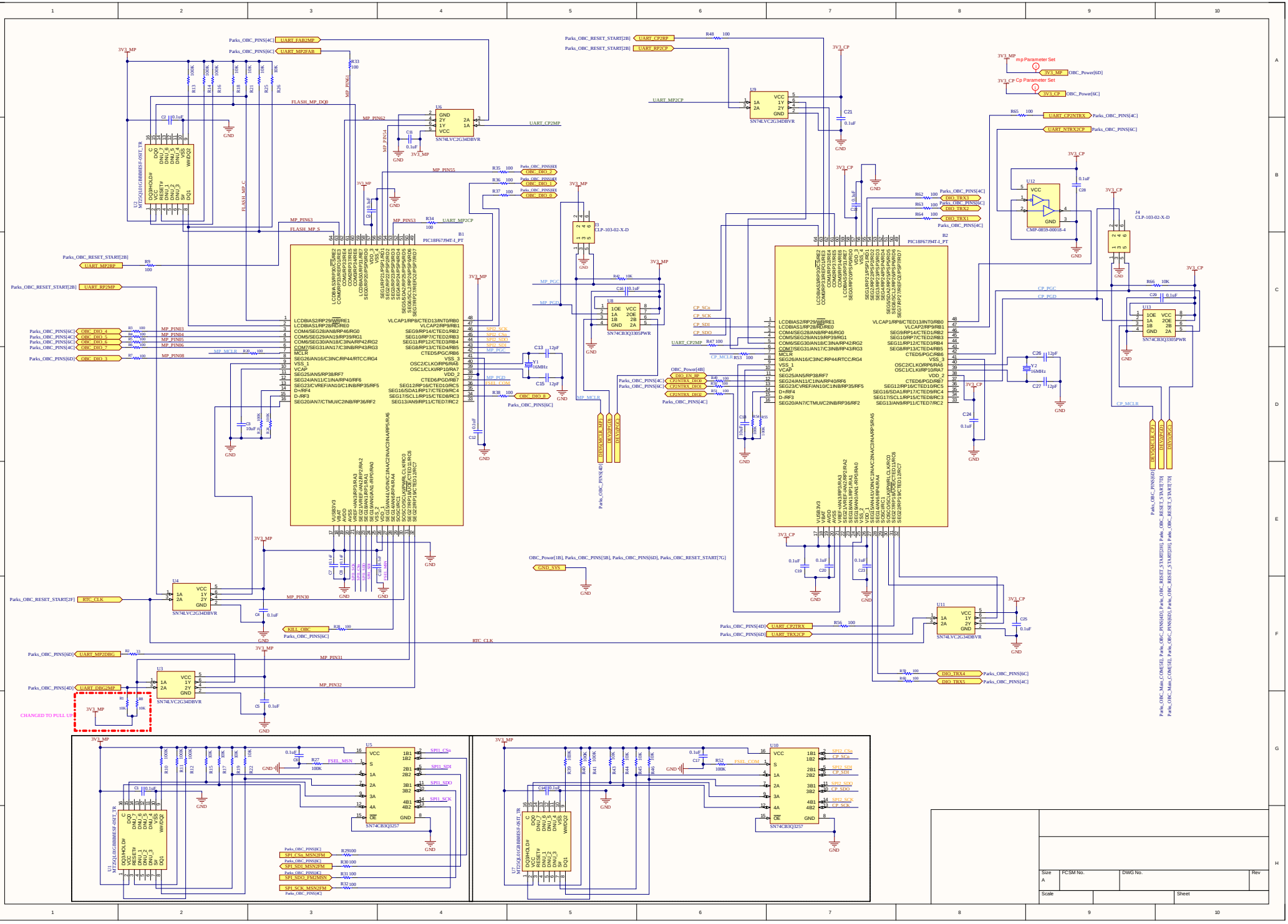
B1
PIC18F67J94T-I_PT
B2
PIC18F67J94T-I_PT
U2
MT25QU01GBBB8E3F-0SIT_TR
U1
MT25QL01GBBB8E3F-0SIT_TR
U7
MT25QL01GBBB8E3F-0SIT_TR
U5
SN74CB3Q3257
U10
SN74CB3Q3257
U6
SN74LVC2G34DBVR
U9
SN74LVC2G34DBVR
U4
SN74LVC2G34DBVR
U3
SN74LVC2G34DBVR
U11
SN74LVC2G34DBVR
U8
SN74CB3Q3305PWR
U12
CMP-0859-00018-4
U13
SN74CB3Q3305PWR
J3
CLP-103-02-X-D
J4
CLP-103-02-X-D
Y1
16MHz
Y2
16MHz
3V3_MP
3V3_CP
GND
UART_FAB2MP
UART_MP2FAB
UART_MP2RP
UART_RP2MP
UART_MP2DBG
UART_DBG2MP
UART_CP2RP
UART_RP2CP
UART_CP2MP
UART_MP2CP
UART_CP2TRX
UART_TRX2CP
UART_CP2NTRX
UART_NTRX2CP
DIO_TRX1
DIO_TRX2
DIO_TRX4
DIO_TRX5
DIO_DIO_2
DIO_DIO_1
DIO_DIO_0
DIO_DIO_4
DIO_DIO_5
DIO_DIO_6
DIO_DIO_7
DIO_DIO_3
DIO_DIO_8
RTC_CLK
KILL_OBC
GND_SYS
FLASH_MP_DQ0
FLASH_MP_S
FLASH_MP_C
MP_PIN62
MP_PIN54
MP_PIN55
MP_PIN63
MP_PIN53
MP_PIN03
MP_PIN04
MP_PIN05
MP_PIN06
MP_PIN08
MP_PIN30
MP_PIN31
MP_PIN32
MP_PGC
MP_PGD
MP_MCLR
FSEL_COM
CP_SCo
CP_SCK
CP_SDI
CP_SDO
CP_PGC
CP_PGD
CP_MCLR
SPI2_SCK
SPI2_CSo
SPI2_SDI
SPI2_SDO
SPI1_CSo
SPI1_SDI
SPI1_SDO
SPI1_SCK
FSEL_MSN
SPI_CSo_MSN2FM
SPI_SDI_MSN2FM
SPI_SDO_FM2MSN
SPI_SCK_MSN2FM
CHANGED TO PULL UP
m p Parameter Set
Cp Parameter Set
OBC_Power[6D]
OBC_Power[6C]
OBC_Power[4B]
OBC_Power[1B], Parks_OBC_PINS[5B], Parks_OBC_PINS[6D], Parks_OBC_RESET_START[7G]
Parks_OBC_Main_COM[5E], Parks_OBC_PINS[4D], Parks_OBC_RESET_START[7H], Parks_OBC_RESET_START[7I]
Size
A
FCSM No.
DWG No.
Rev
Scale
Sheet

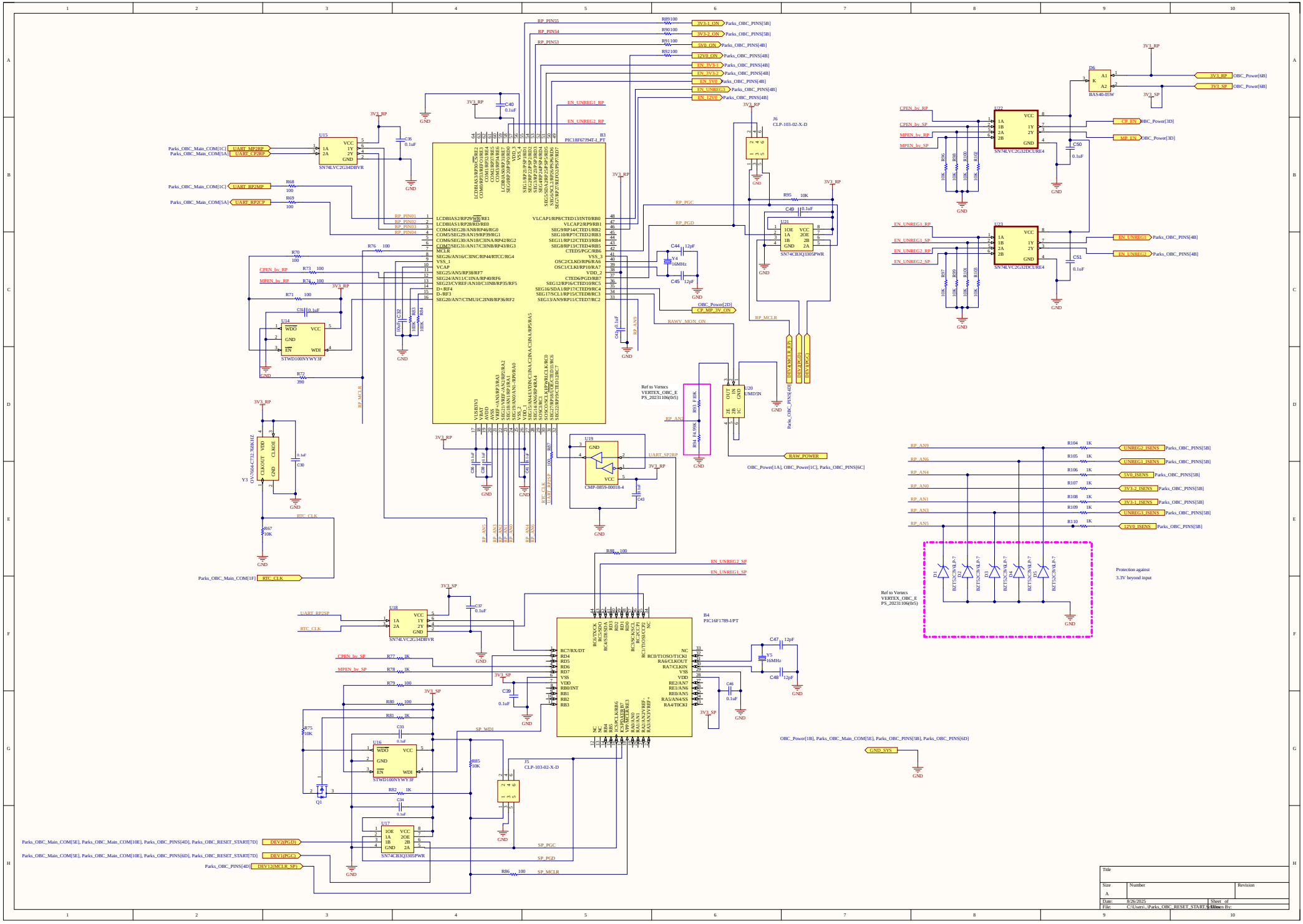
PIC18F67J94T-I_PT
SN74LVC2G34DBVR
STWD100NYWY3F
SN74LVC2G32DCURE4
SN74CB3Q3305PWR
CMP-0859-00018-4
BAS40-05W
CLP-103-02-X-D
PIC16F1789-I/PT
Y4 16MHz
Y5 16MHz
Y3 OV-7604-C7T32.768KHZ
Protection against 3.3V beyond input
Ref to Vertecs VERTEX_OBC_EPS_20231106(0r5)
Title
Size A
Number
Revision
Date: 8/26/2025
Sheet of
File: C:\Users\..\Parks_OBC_RESET_START.SchDoc
Drawn By:

Ref from Birds-X_OBC_Schematic

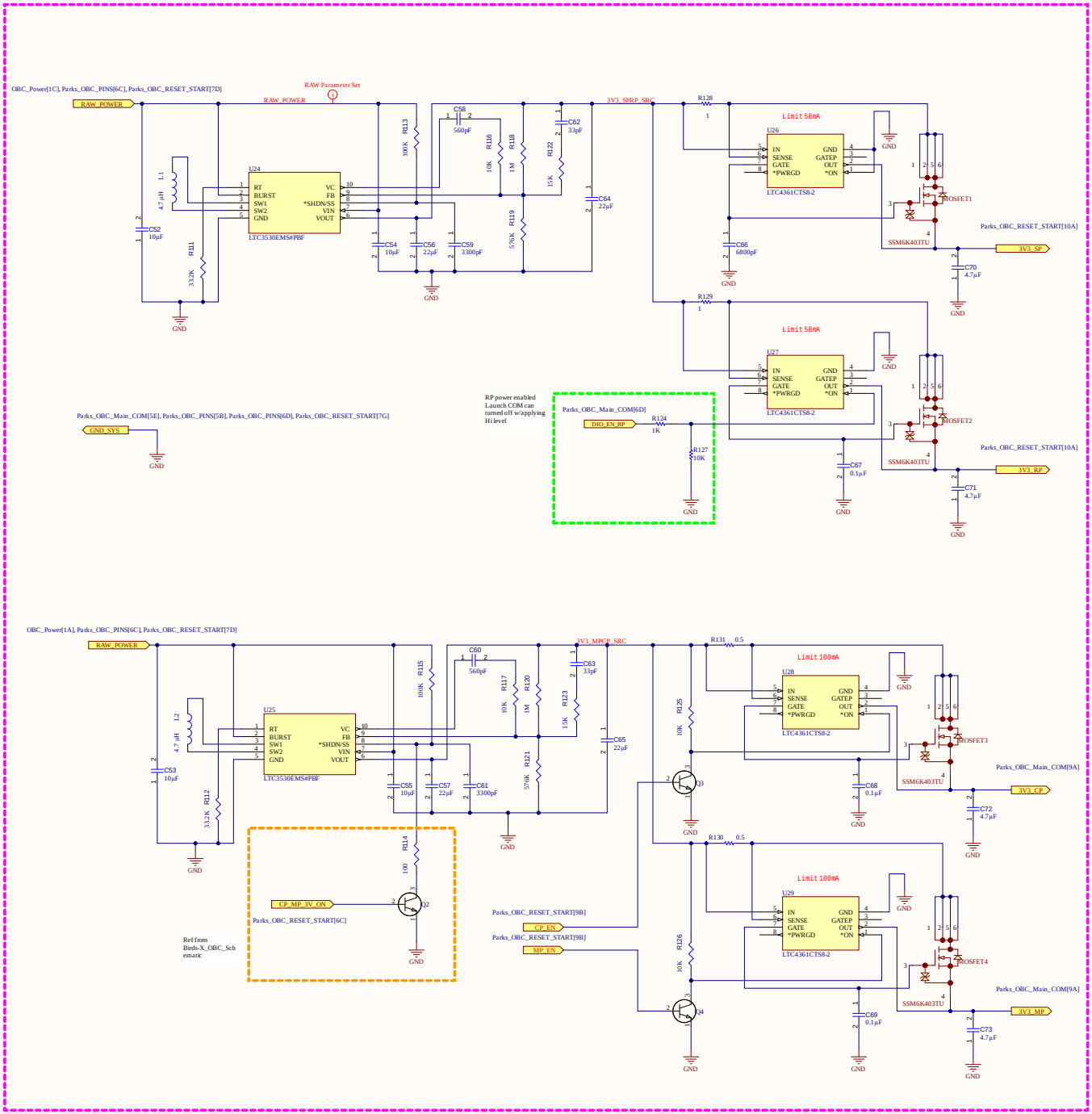

Title		
Size A3	Number	Revision
Date: 8/26/2025		Sheet of
File: C:\Users\...\OBC_Power.SchDoc		Drawn By: