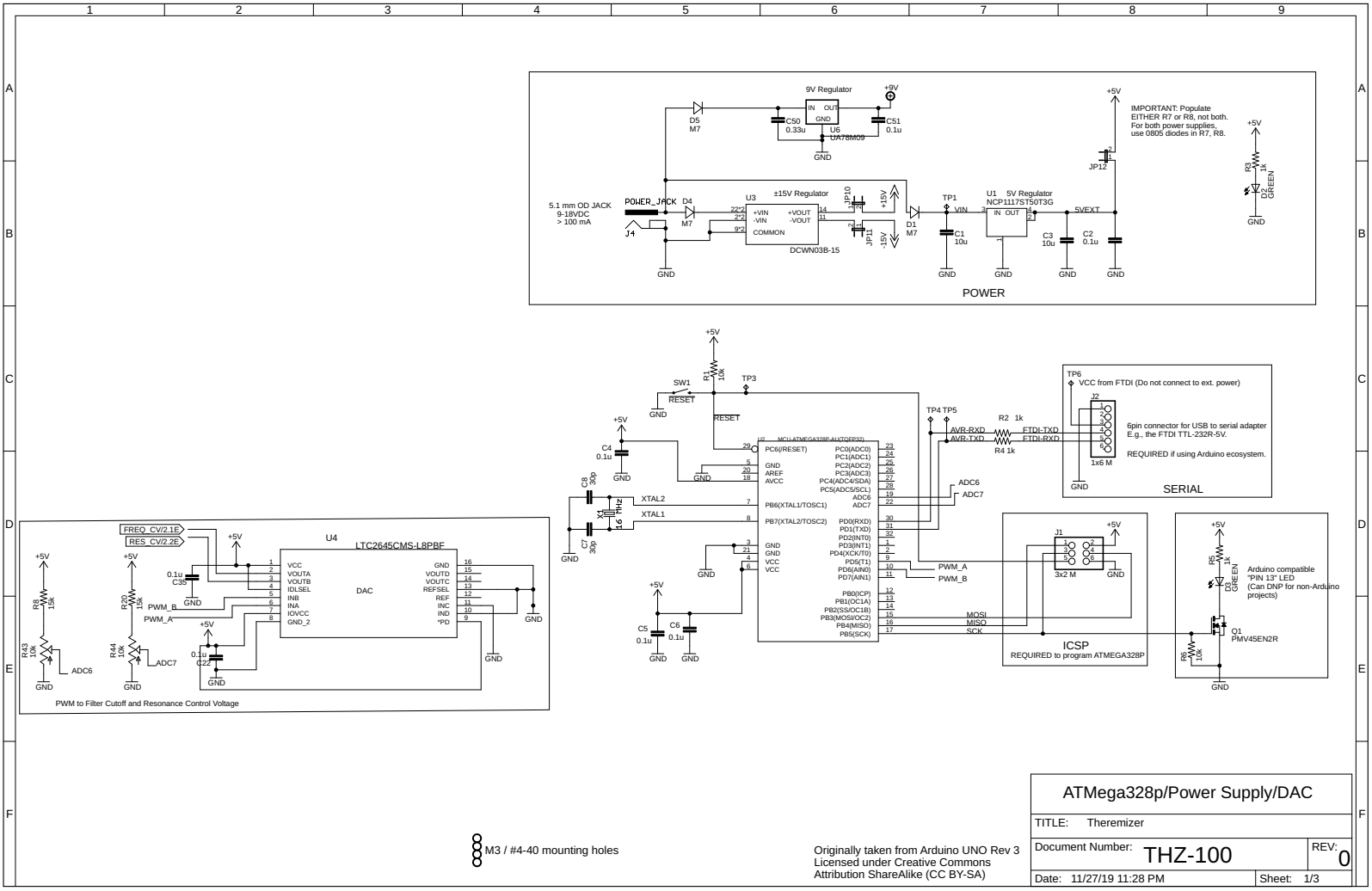

M3 / #4-40 mounting holes

Originally taken from Arduino UNO Rev 3
Licensed under Creative Commons
Attribution ShareAlike (CC BY-SA)

ATMega328p/Power Supply/DAC	
TITLE: Theremizer	
Document Number: THZ-100	REV: 0
Date: 11/27/19 11:28 PM	Sheet: 1/3

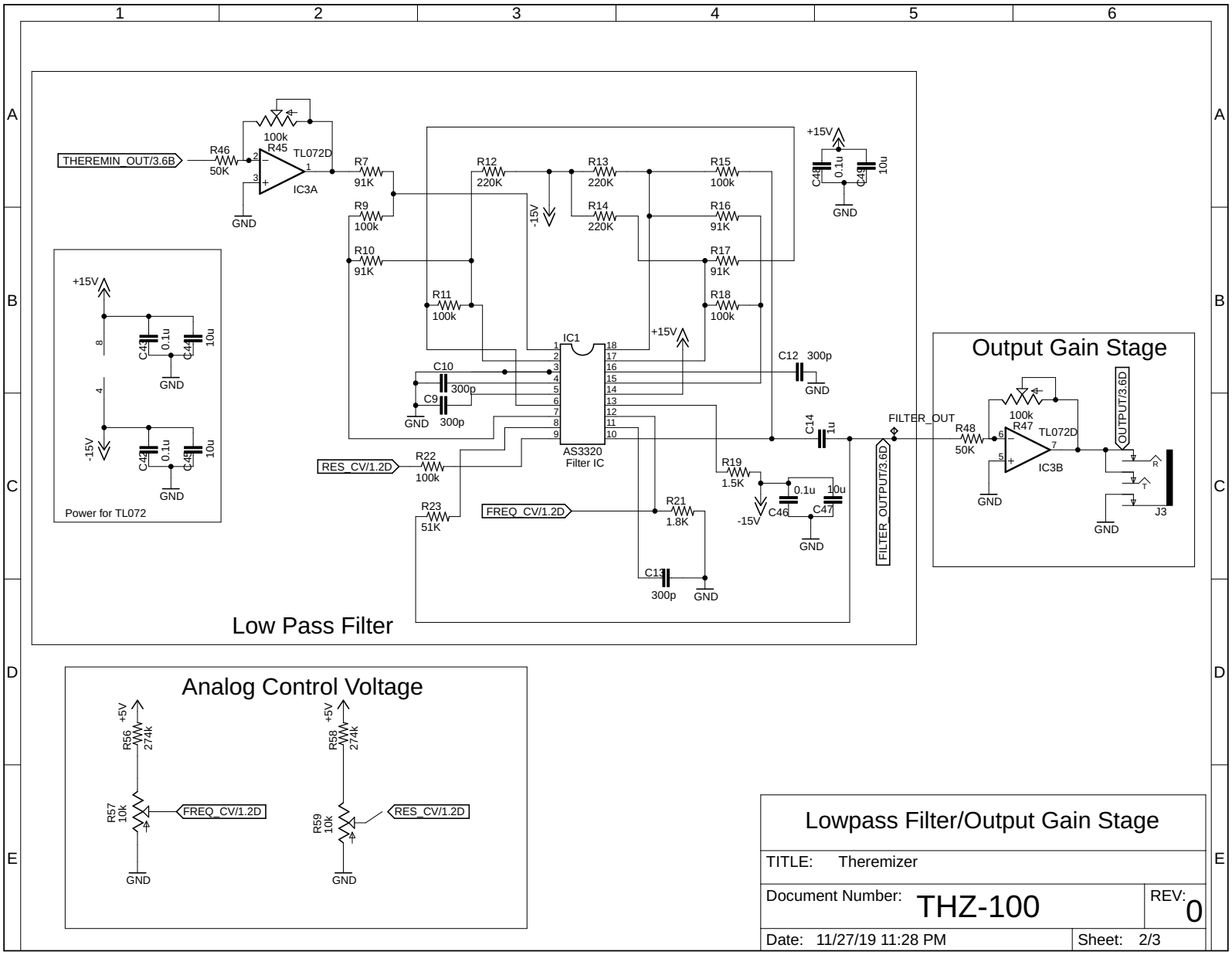
THEREMIN_OUT/3.6B
R46
50K
R45
100k
TL072D
IC3A
GND
R7
91K
R9
100k
R10
91K
R11
100k
R12
220K
R13
220K
R14
220K
R15
100k
R16
91K
R17
91K
R18
100k
-15V
+15V
C41
0.1u
C42
10u
IC1
AS3320
Filter IC
C10
300p
C9
300p
C12
300p
C14
1u
R22
100k
RES_CV/1.2D
R23
51K
FREQ_CV/1.2D
R21
1.8K
R19
1.5K
C46
0.1u
C47
10u
C13
300p
FILTER_OUT
FILTER_OUTPUT/3.6D
Low Pass Filter
Power for TL072
C43
0.1u
C44
10u
C45
0.1u
C46
10u
Output Gain Stage
R48
50K
R47
100k
TL072D
IC3B
OUTPUT/3.6D
J3
Analog Control Voltage
+5V
R56
274k
R57
10k
R58
274k
R59
10k
FREQ_CV/1.2D
RES_CV/1.2D
Lowpass Filter/Output Gain Stage
TITLE: Theremizer
Document Number: THZ-100
REV: 0
Date: 11/27/19 11:28 PM
Sheet: 2/3

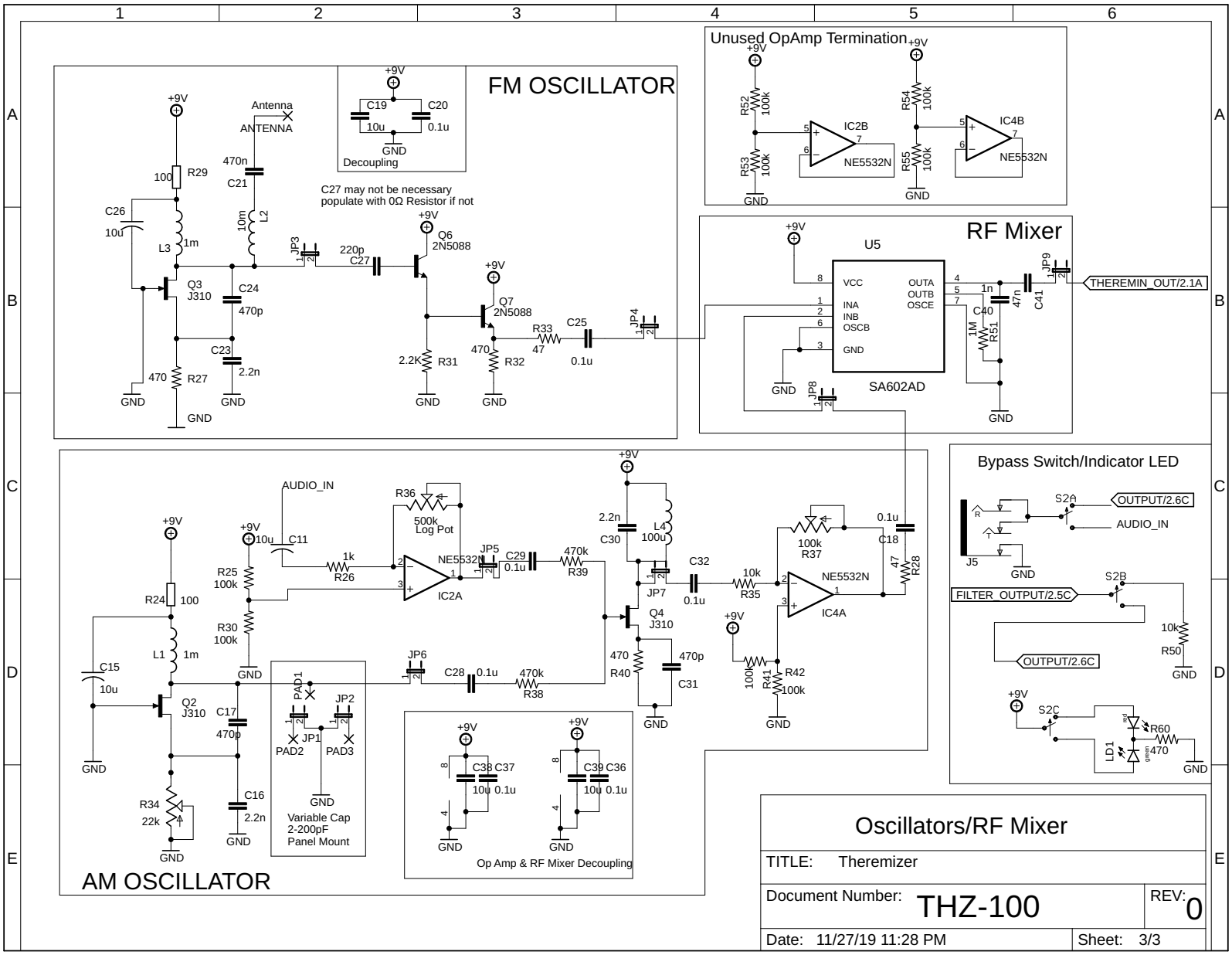
FM OSCILLATOR
Antenna
ANTENNA
+9V
R29
100
C26
10u
L3
1m
Q3
J310
470n
C21
10m
L2
C24
470p
C23
2.2n
470
R27
GND
JP3
220p
C27
C27 may not be necessary
populate with 0Ω Resistor if not
Q6
2N5088
Q7
2N5088
2.2K
R31
470
R32
R33
47
C25
0.1u
JP4
C19
10u
C20
0.1u
Decoupling
Unused OpAmp Termination
R52
100k
R53
100k
IC2B
NE5532N
R54
100k
R55
100k
IC4B
NE5532N
RF Mixer
U5
VCC
INA
INB
OSCB
GND
OUTA
OUTB
OSCE
SA602AD
JP8
1n
C40
1M
R51
47n
C41
JP9
THEREMIN_OUT/2.1A
AM OSCILLATOR
AUDIO_IN
10u
C11
1k
R26
R36
500k
Log Pot
NE5532N
IC2A
JP5
C29
0.1u
470k
R39
R25
100k
R30
100k
R24
100
L1
1m
C15
10u
Q2
J310
C17
470p
C16
2.2n
R34
22k
JP6
C28
0.1u
470k
R38
PAD1
JP1
JP2
PAD2
PAD3
Variable Cap
2-200pF
Panel Mount
2.2n
L4
100u
C30
JP7
Q4
J310
470
R40
470p
C31
C32
0.1u
10k
R35
100k
R37
NE5532N
IC4A
0.1u
C18
47
R28
100k
R41
R42
100k
C38 C37
10u 0.1u
C39 C36
10u 0.1u
Op Amp & RF Mixer Decoupling
Bypass Switch/Indicator LED
S2A
OUTPUT/2.6C
AUDIO_IN
J5
S2B
FILTER_OUTPUT/2.5C
10k
R50
OUTPUT/2.6C
S2C
LD1
red
green
R60
470
Oscillators/RF Mixer
TITLE: Theremizer
Document Number: THZ-100
REV: 0
Date: 11/27/19 11:28 PM
Sheet: 3/3