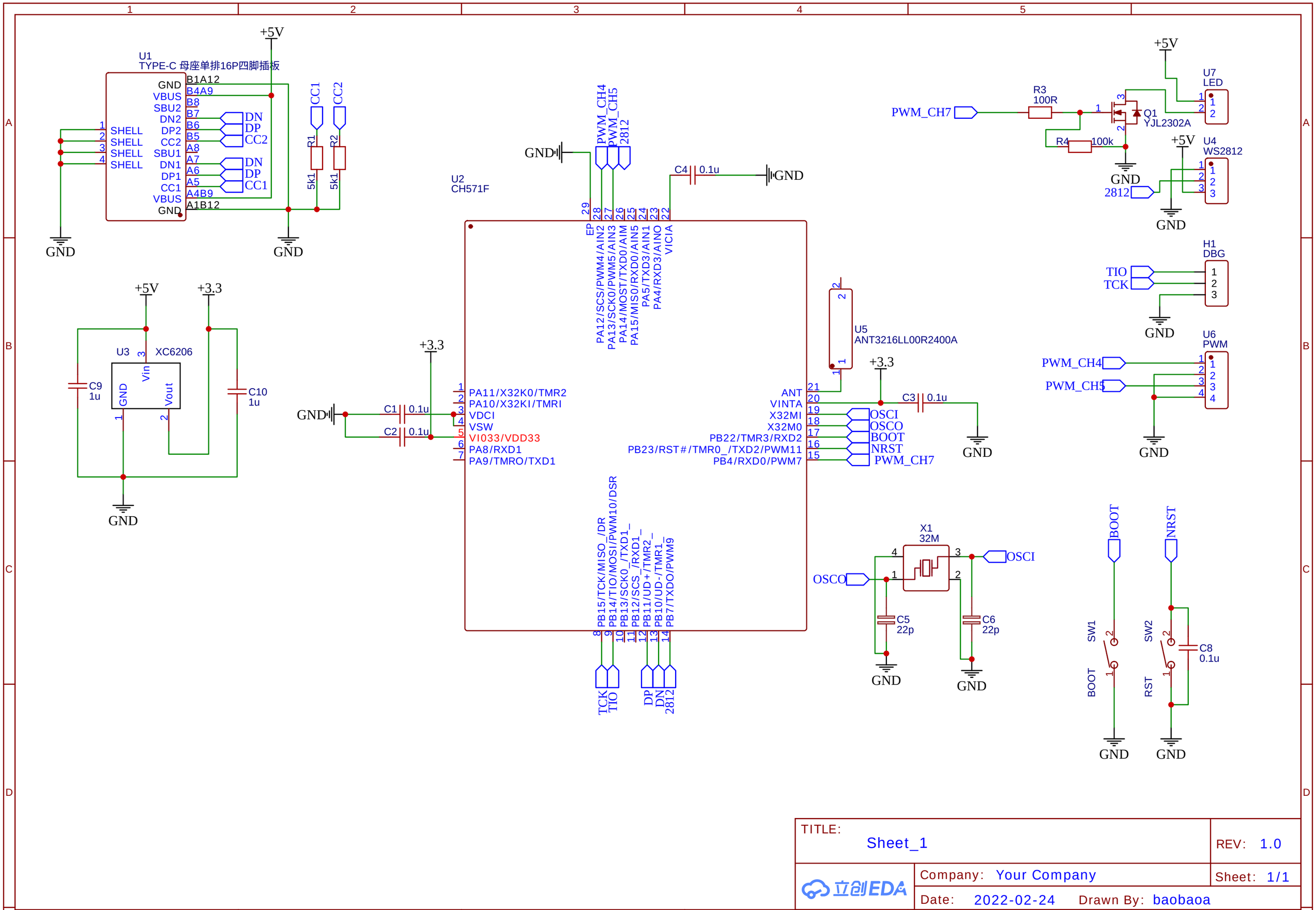

TITLE: Sheet_1	REV: 1.0
立创EDA Company: Your Company	Sheet: 1/1
Date: 2022-02-24 Drawn By: baobaoa	