KUZEY YASAYAN

2025

MATERIALS ENGINEERING @ *MCGILL*

PORTFOLIO

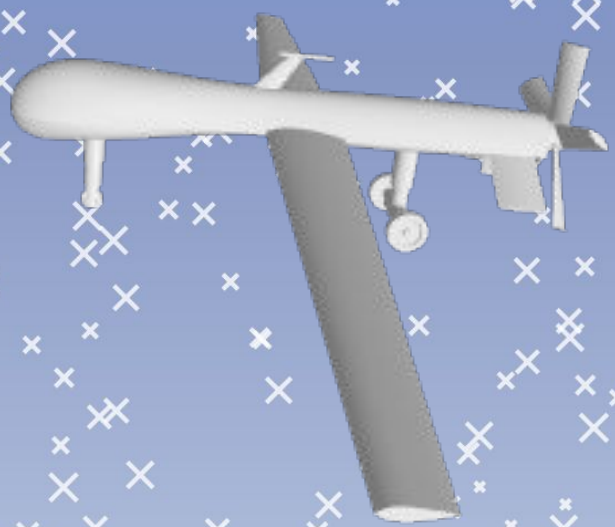

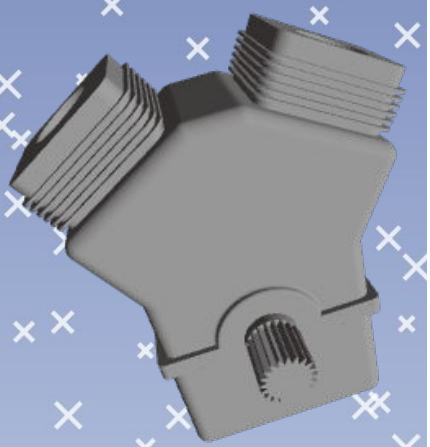

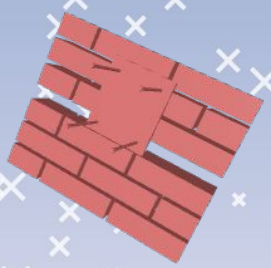

KZ-250 is a concept design of a Fixed Wing UAV. It is inspired by Medium-Altitude Long-Endurance (MALE) drones which are used for both military and industrial purposes.

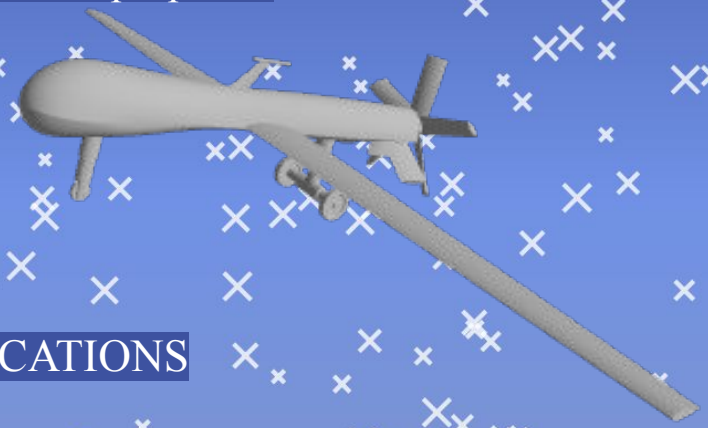

MY PROCESS:

PRODUCT RESEARCH

CONCEPT AND SPECIFICATIONS

MASTER MODEL CURVES & SURFACE DESIGN (in NX)

IMPORT INTO NX ASSEMBLY FOR TOP-DOWN DESIGN

2D REPRESENTATION

IMPORTING CAD FOR STATIC ANALYSIS

COMPUTATIONAL FLUID DYNAMICS FLOW ANALYSIS

STATIC STRUCTURAL ANALYSIS OF FUSELAGE

IDEAS FOR IMPROVING UNDERSTANDING OF DESIGN

NX

SOLIDWORKS SIMULATION

KUZEY.WORKS

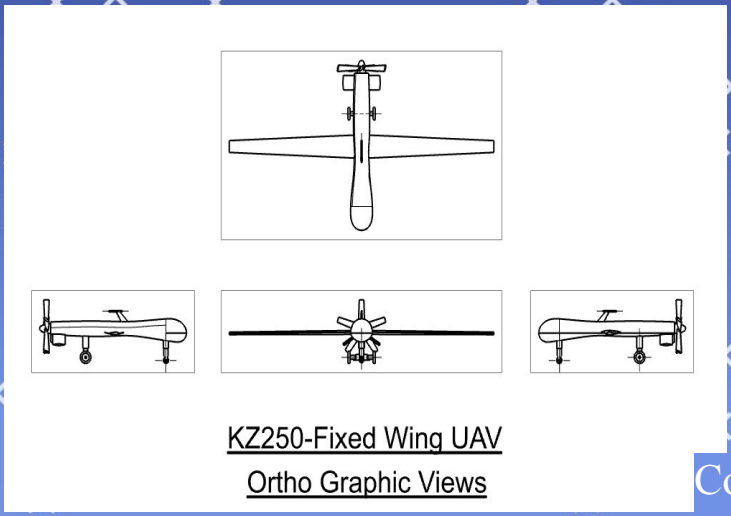

Concept Fixed UAV Design.

Specifications:

- Top speed: 220 km/h
- Wing Span:14900 mm
- Length: 7070 mm
- Payload of 300 Kg
- Maximum Altitude:9500 meters

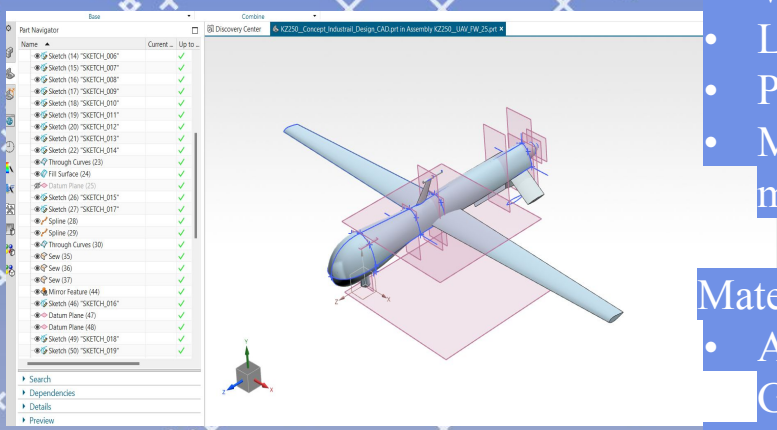

Materials

- Aluminium-Aerospace Grade
- Carbon Fiber Composites
- Titanium

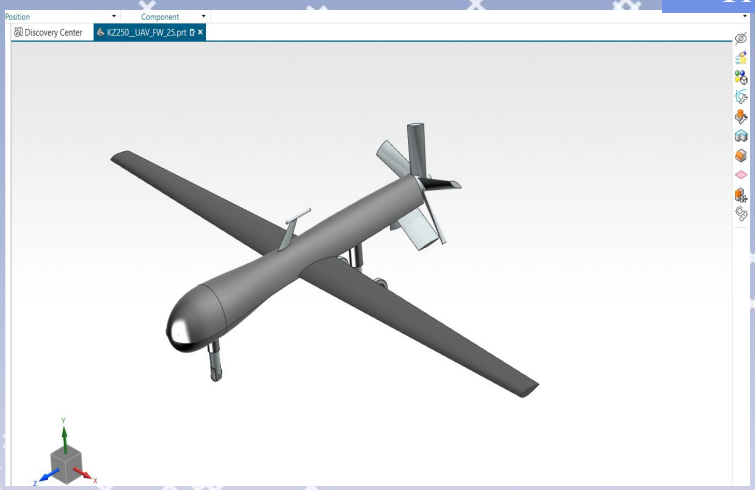

KUZEY.WORKS

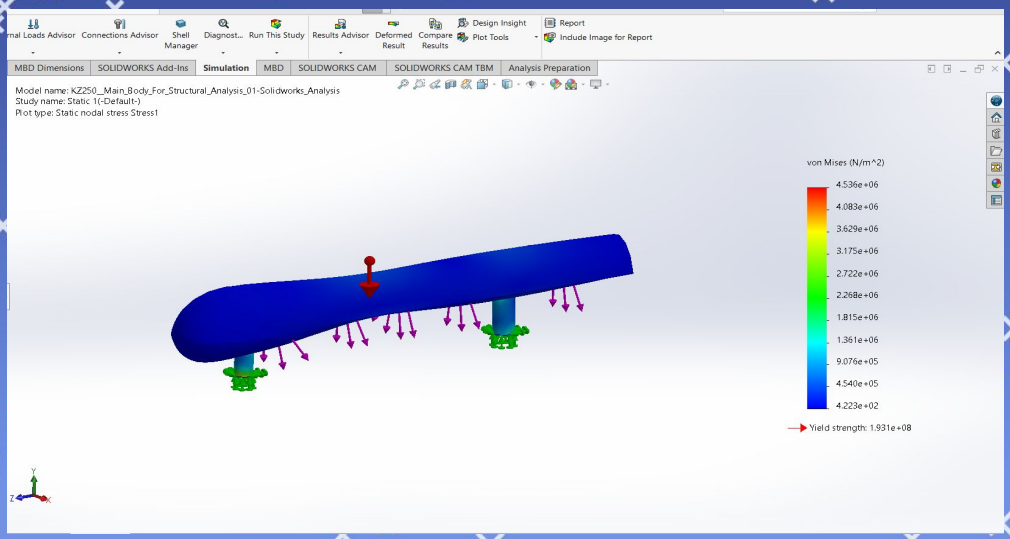

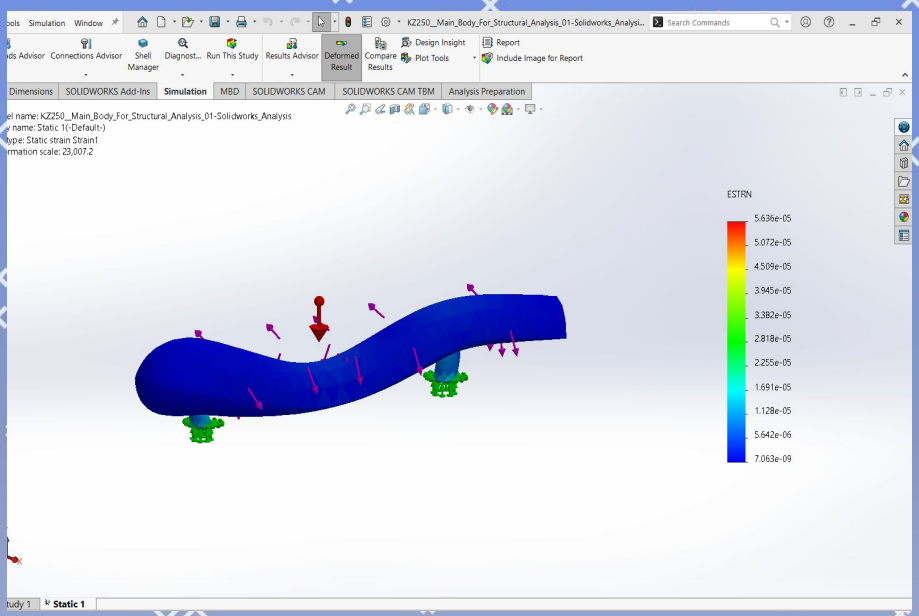

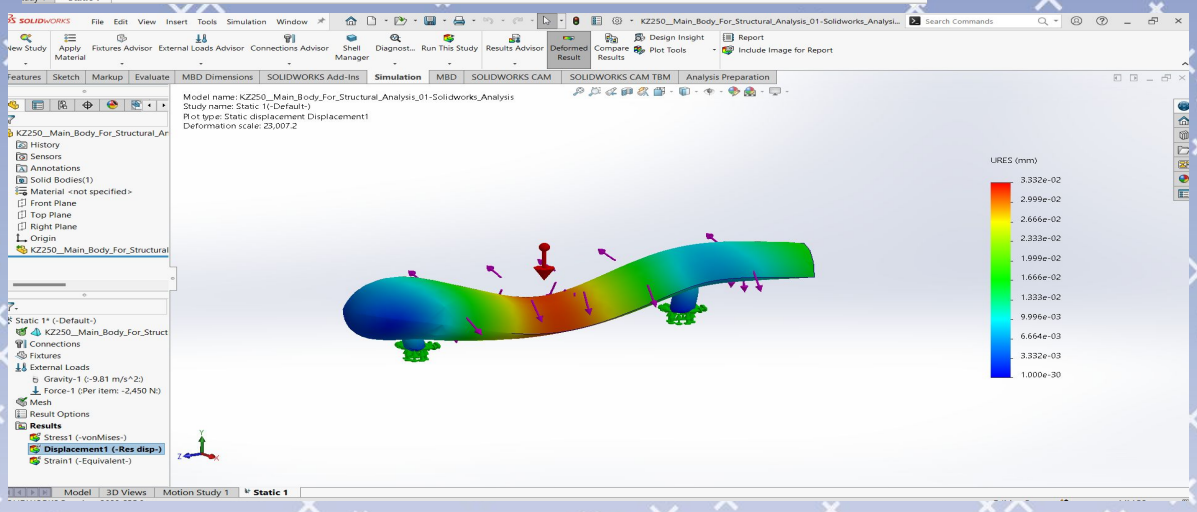

STATIC ANALYSIS AND STRAIN DISTRIBUTION (FUSELAGE)

KUZEY.WORKS

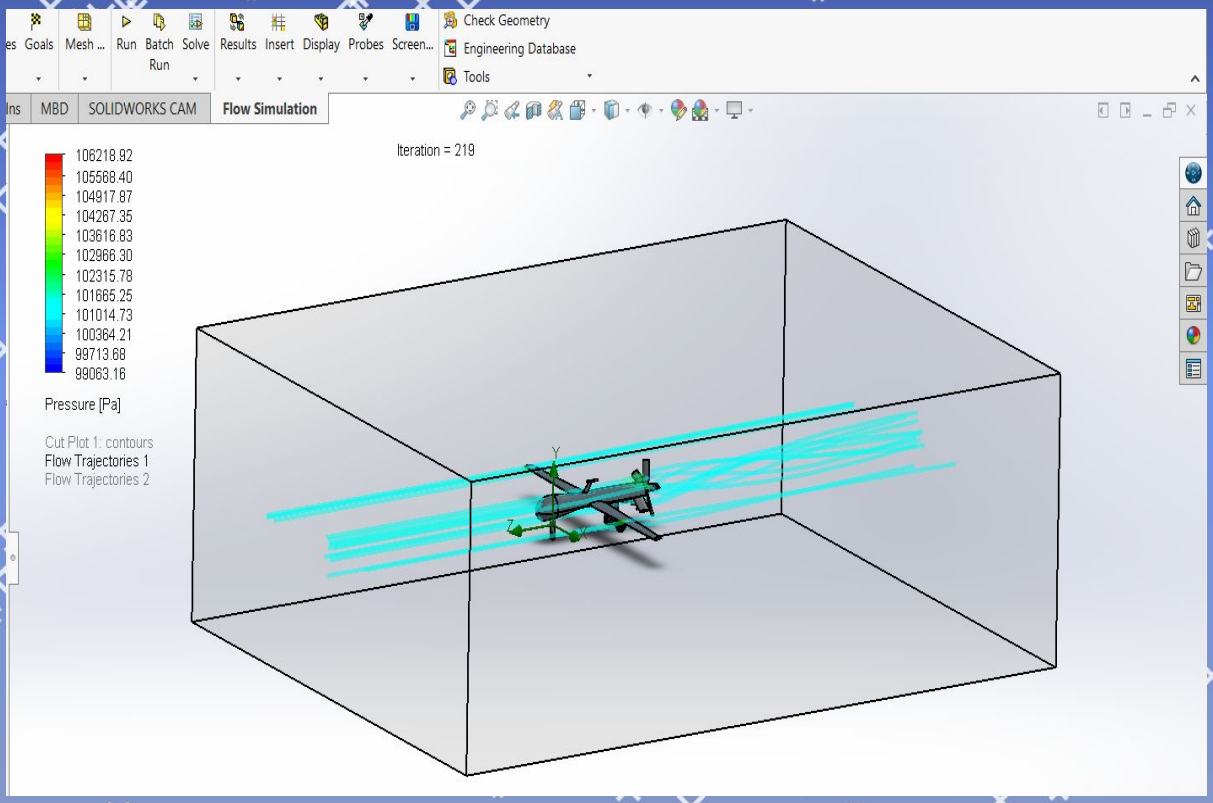

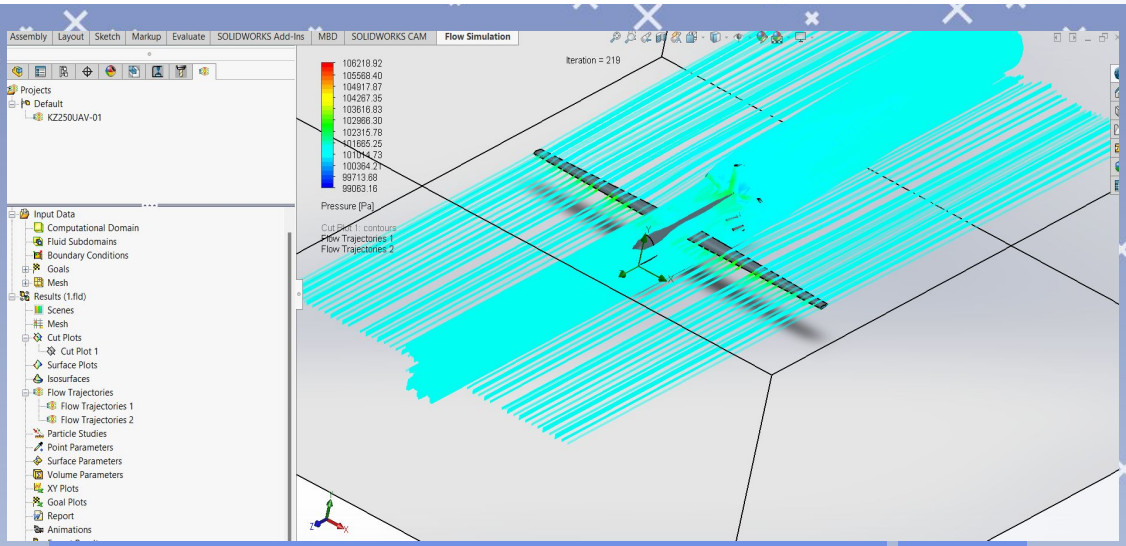

GENERATING PRESSURE PLOT & FLUID FLOW PLOT w/ SOLIDWORKS FLOW .

CONCLUSION: IN ORDER TO IMPROVE THIS DRONE, IMPROVEMENTS ARE NEEDED IN THE FUSELAGE DESIGN AND TAIL END DESIGN.

KUZEY.WORKS

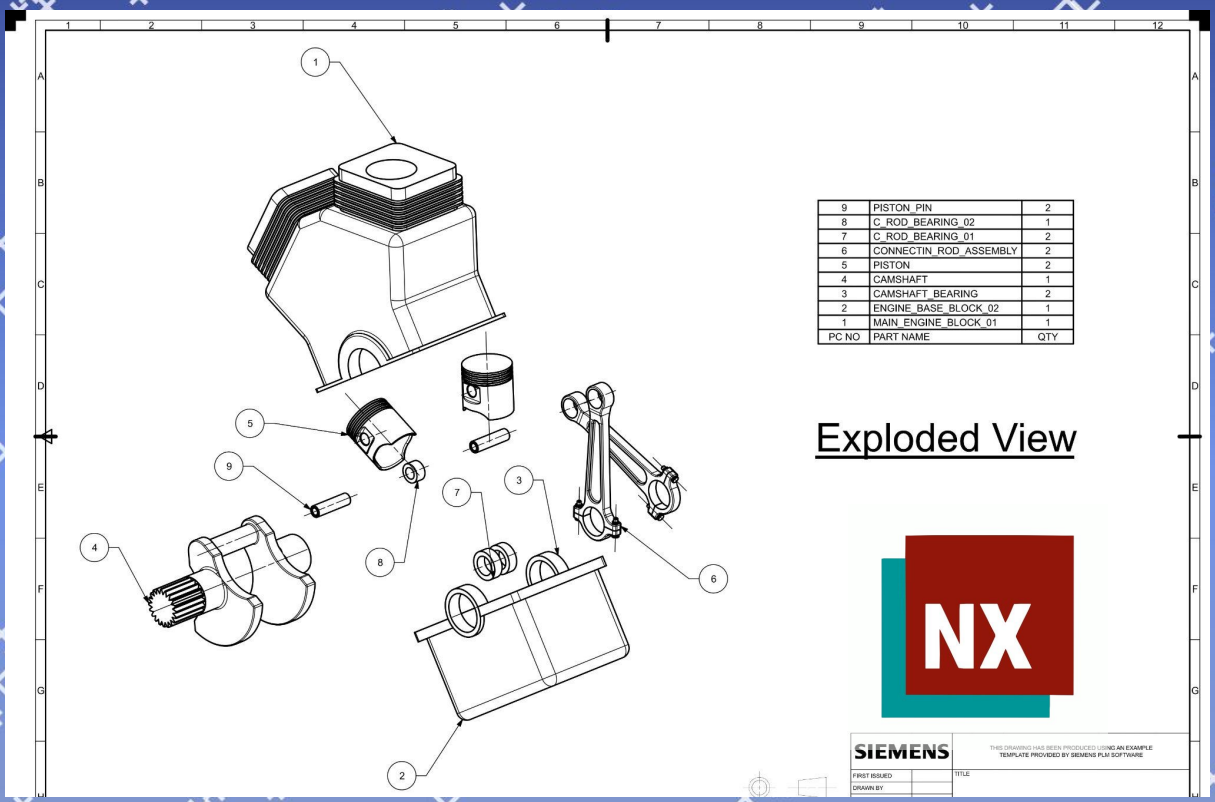

Creating Basic 2D drawings

Using Drafting Workbench

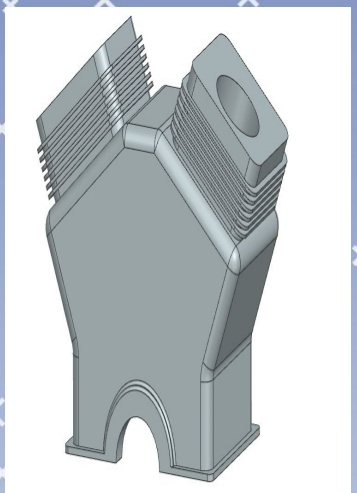

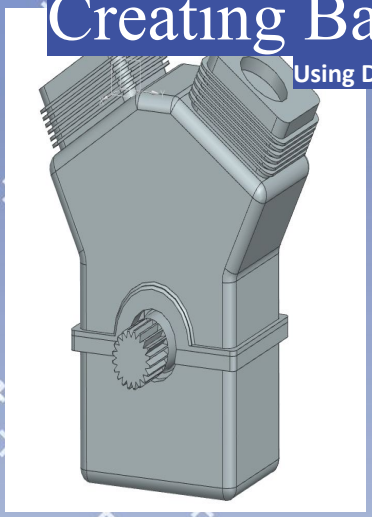

Creating Assembly using bottom up Approach using Assembly Workbench

Creating 10+ Individual Parts according to 2D Plans

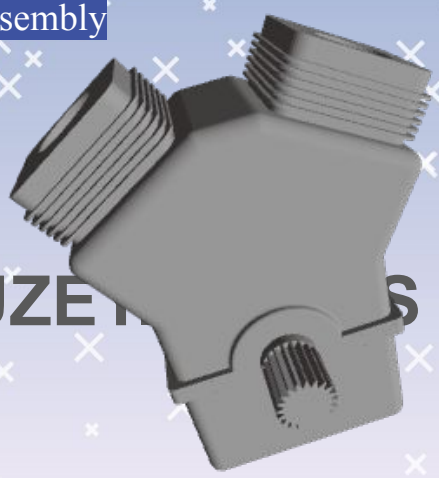

KUZE

AUTODESK AUTOCAD

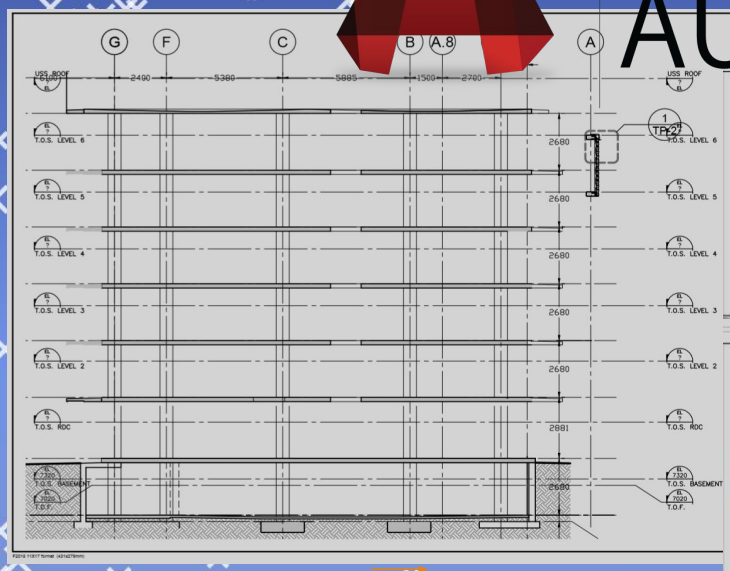

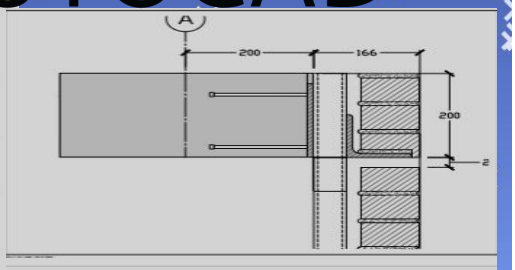

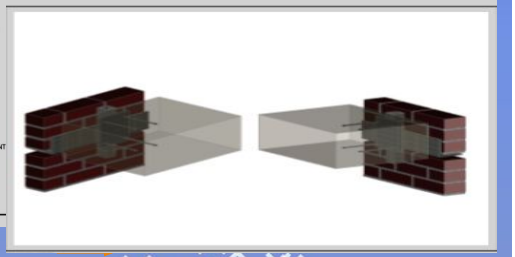

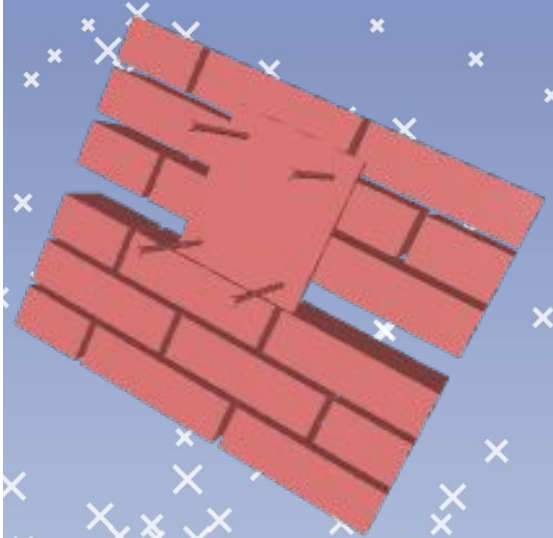

Developed detailed structural CAD drawings for a multi-story concrete structure as part of a term project. Included 1:100 section view of one of the houses, and 1:5 3D and 2D detail drawings of a shelf-angle detail holding the bricks together. AutoCAD 2D & 3D, CISC Handbook, based off architectural floor plan

KUZEY.WORKS

https://www.linkedin.com/in/kuzey1/

RESUME HERE

KUZEY.WORKS

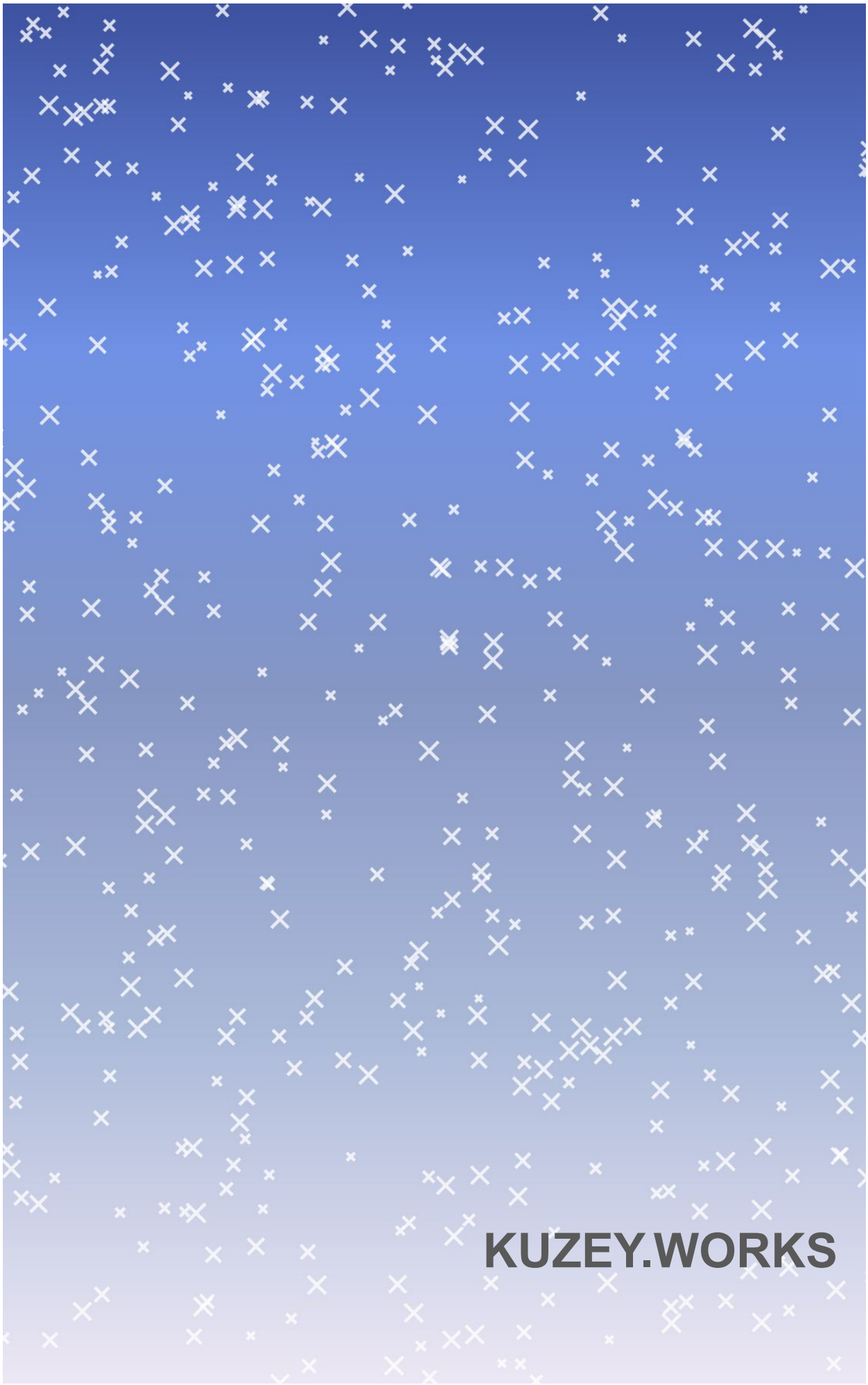
KUZEY.WORKS