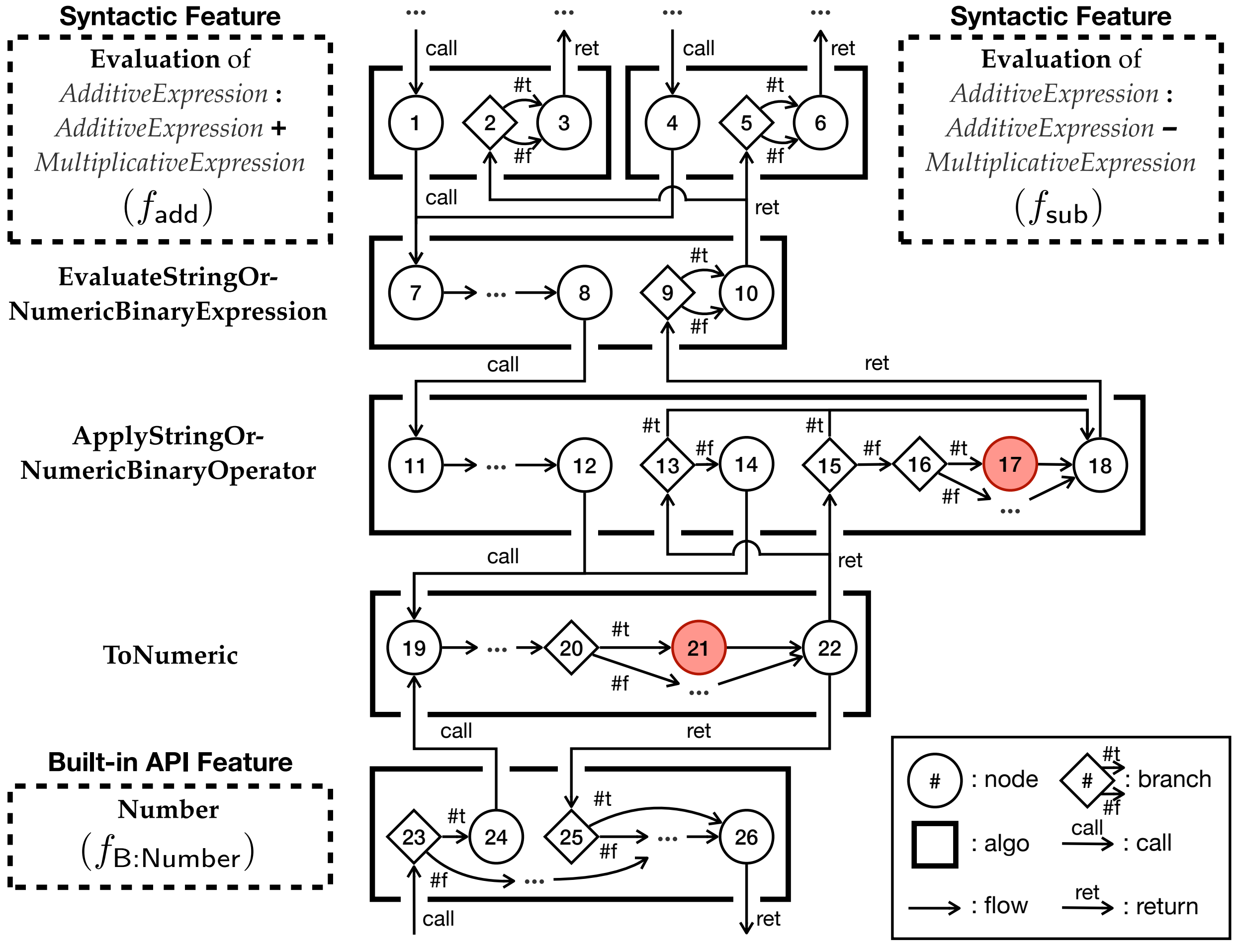
Syntactic Feature
Evaluation of
AdditiveExpression :
AdditiveExpression +
MultiplicativeExpression
(f_{add})
Syntactic Feature
Evaluation of
AdditiveExpression :
AdditiveExpression −
MultiplicativeExpression
(f_{sub})
EvaluateStringOr-
NumericBinaryExpression
ApplyStringOr-
NumericBinaryOperator
ToNumeric
Built-in API Feature
Number
($f_{\text{B:Number}}$)
call
ret
#t
#f
: node
: branch
: algo
: call
: flow
: return