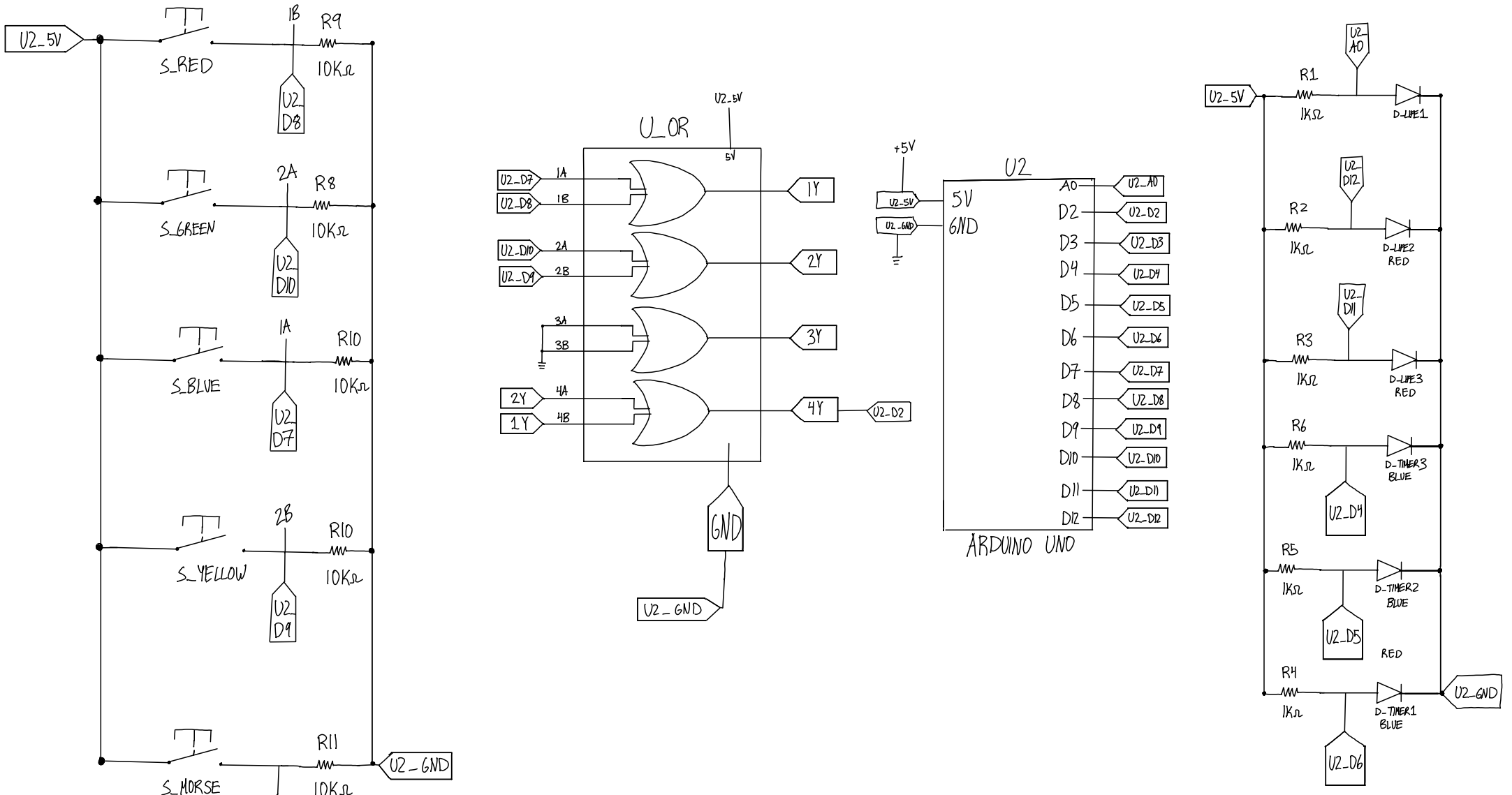

Morse Code Circuit Schematic