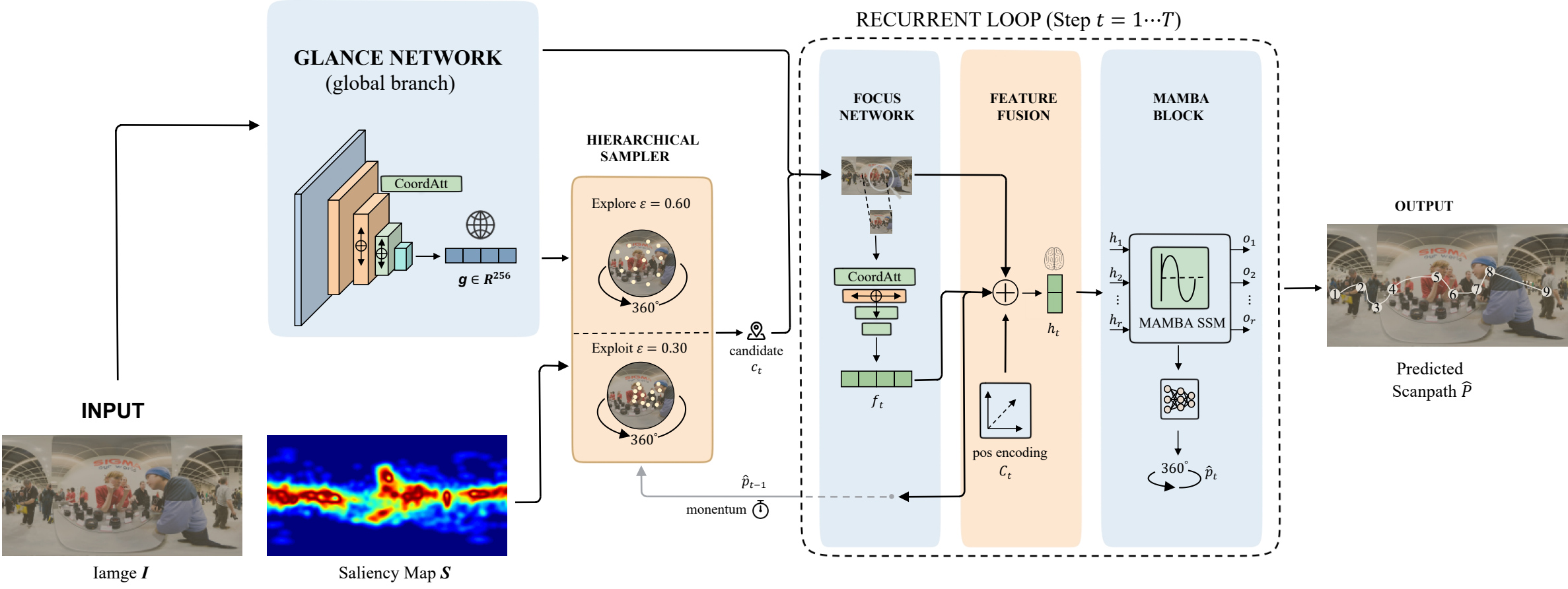
RECURRENT LOOP (Step $t = 1 \cdots T$)
GLANCE NETWORK
(global branch)
CoordAtt
$g \in R^{256}$
HIERARCHICAL SAMPLER
Explore $\varepsilon = 0.60$
360°
Exploit $\varepsilon = 0.30$
360°
candidate c_t
$\hat{p}_{t-1}$
momentum
FOCUS NETWORK
CoordAtt
f_t
FEATURE FUSION
pos encoding C_t
h_t
MAMBA BLOCK
h_1
h_2
h_r
MAMBA SSM
o_1
o_2
o_r
360°
$\hat{p}_t$
OUTPUT
Predicted Scanpath $\hat{P}$
INPUT
Iamge I
Saliency Map S