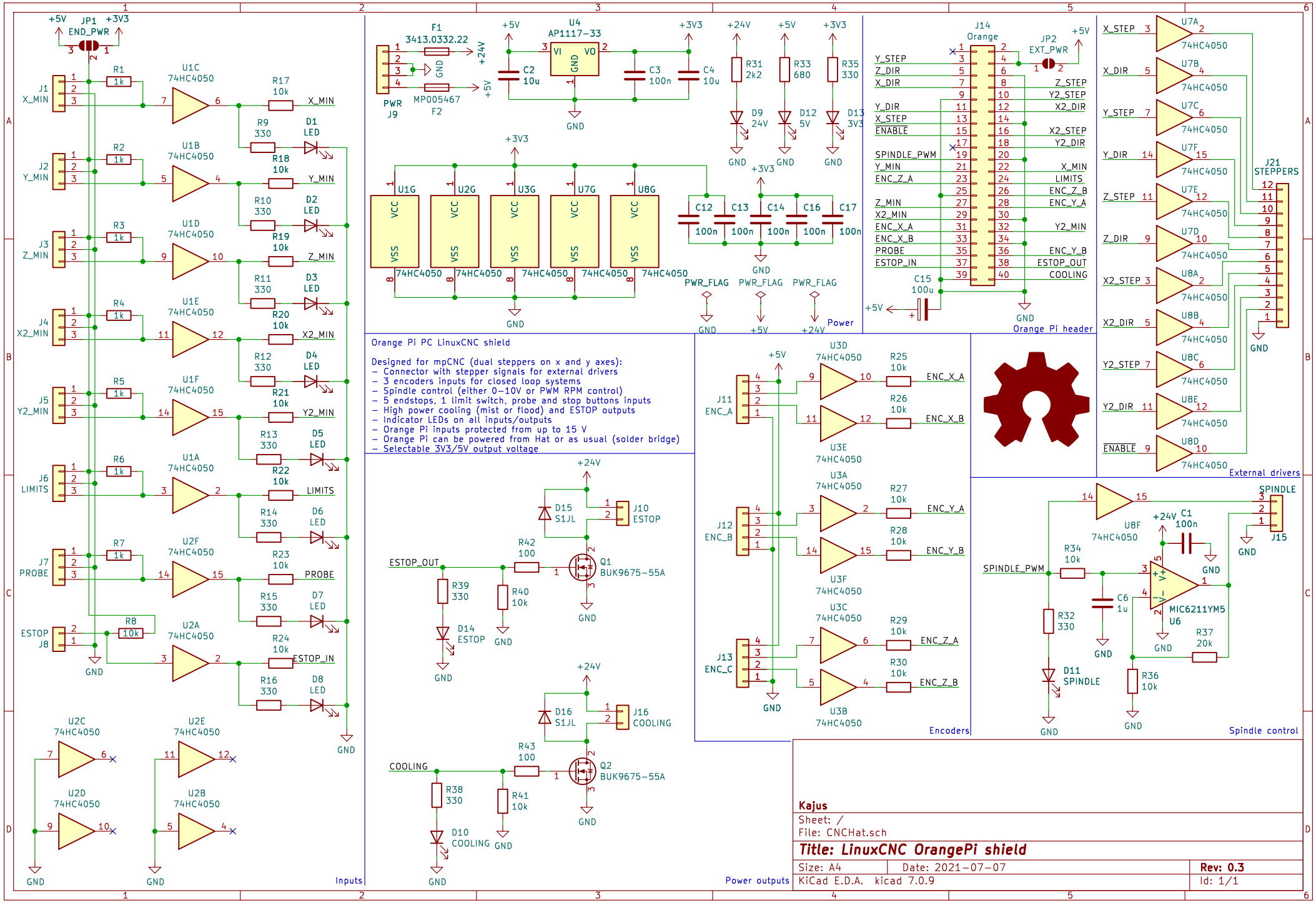
Orange Pi PC LinuxCNC shield
Designed for mpCNC (dual steppers on x and y axes):
– Connector with stepper signals for external drivers
– 3 encoders inputs for closed loop systems
– Spindle control (either 0–10V or PWM RPM control)
– 5 endstops, 1 limit switch, probe and stop buttons inputs
– High power cooling (mist or flood) and ESTOP outputs
– Indicator LEDs on all inputs/outputs
– Orange Pi inputs protected from up to 15 V
– Orange Pi can be powered from Hat or as usual (solder bridge)
– Selectable 3V3/5V output voltage
Inputs
Power
Orange Pi header
External drivers
Encoders
Spindle control
Power outputs
Kajus
Sheet: /
File: CNCHat.sch
Title: LinuxCNC OrangePi shield
Size: A4
Date: 2021-07-07
Rev: 0.3
KiCad E.D.A. kicad 7.0.9
Id: 1/1