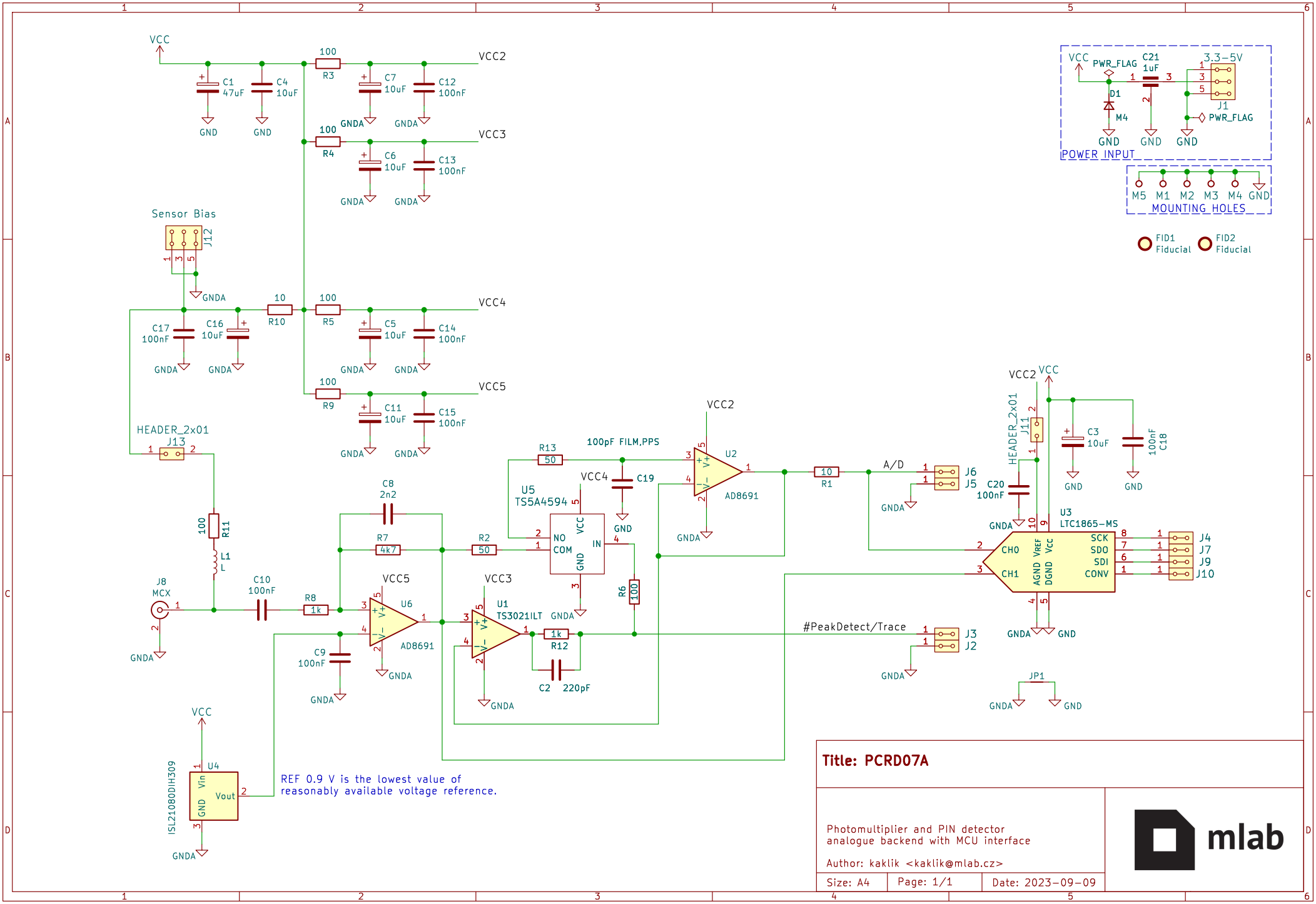

Title: PCRD07A

Photomultiplier and PIN detector analogue backend with MCU interface

Author: kaklik <kaklik@mlab.cz>

Size: A4	Page: 1/1	Date: 2023-09-09

mlab