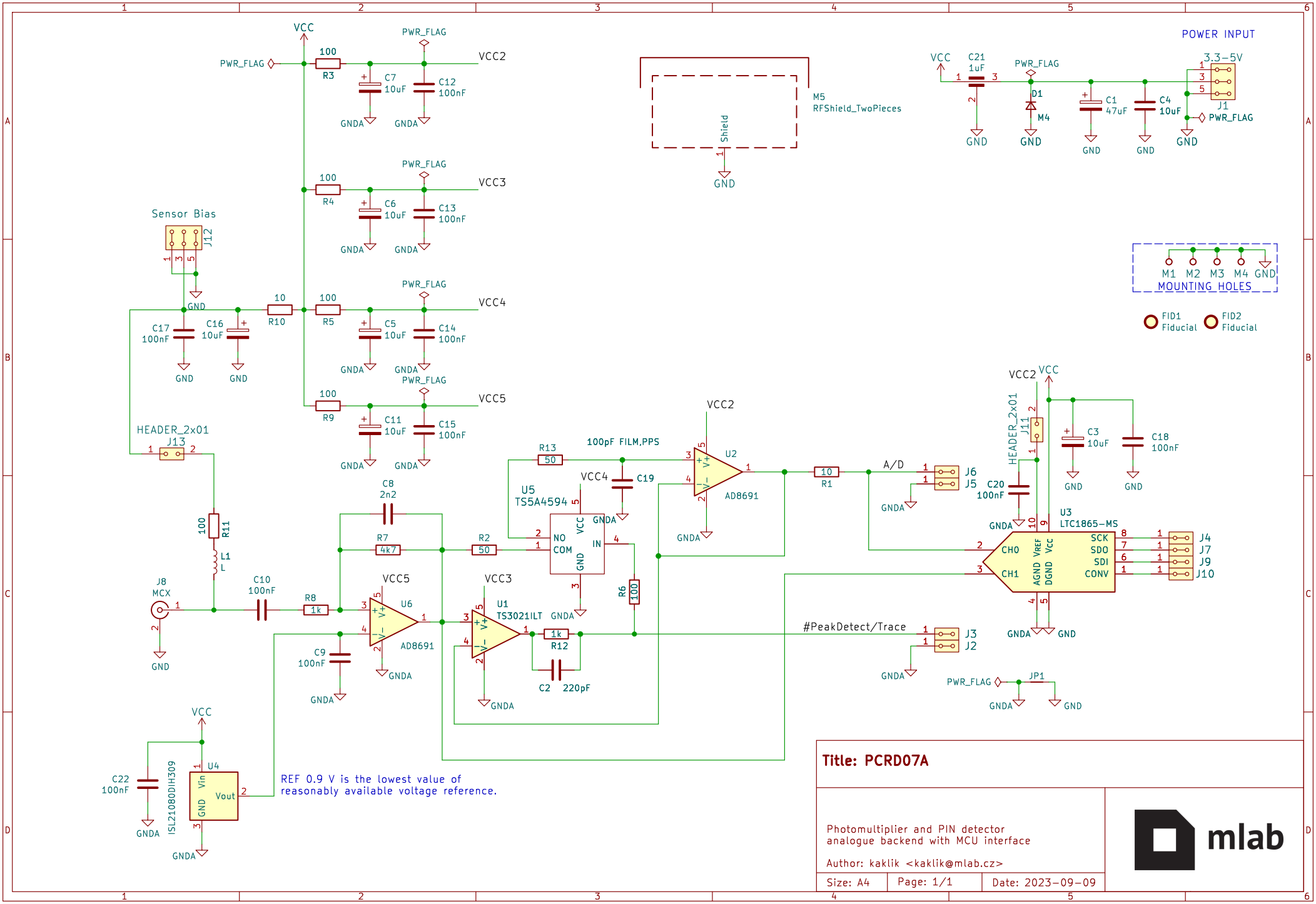
POWER INPUT
3.3–5V
J1
PWR_FLAG
VCC
C21
1uF
D1
M4
C1
47uF
C4
10uF
GND
M5
RFShield_TwoPieces
Shield
VCC2
VCC3
VCC4
VCC5
R3
R4
R5
R9
R10
C7
10uF
C12
100nF
C6
10uF
C13
100nF
C5
10uF
C14
100nF
C11
10uF
C15
100nF
GNDA
Sensor Bias
J12
C17
100nF
C16
10uF
HEADER_2x01
J13
R11
L1
L
J8
MCX
C10
100nF
R8
1k
C8
2n2
R7
4k7
C9
100nF
U6
AD8691
U5
TS5A4594
NO
COM
IN
R2
50
R13
50
100pF FILM,PPS
C19
U2
AD8691
U1
TS3021ILT
R12
1k
C2
220pF
R6
100
R1
10
A/D
J6
J5
#PeakDetect/Trace
J3
J2
HEADER_2x01
J11
C3
10uF
C18
100nF
C20
100nF
U3
LTC1865-MS
CH0
CH1
AGND
VREF
DGND
Vcc
SCK
SDO
SDI
CONV
J4
J7
J9
J10
JP1
C22
100nF
U4
ISL21080DIH309
Vin
Vout
REF 0.9 V is the lowest value of
reasonably available voltage reference.
M1 M2 M3 M4 GND
MOUNTING HOLES
FID1
Fiducial
FID2
Fiducial
Title: PCRD07A
Photomultiplier and PIN detector
analogue backend with MCU interface
Author: kaklik <kaklik@mlab.cz>
Size: A4
Page: 1/1
Date: 2023-09-09
mlab