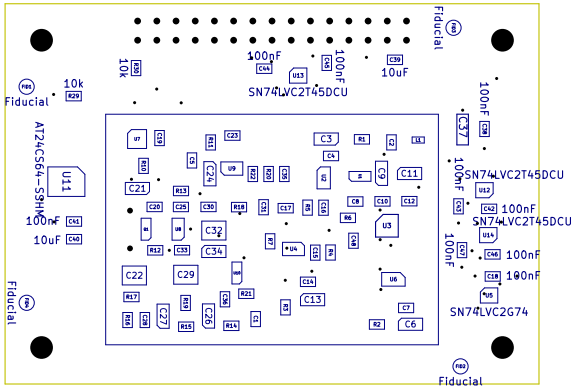

USTSIPIN03A

Author: Universal Scientific Technologies s.r.o.

Size: A4	Page: 1/1	Date: 2023-11-20